Doc. No. 014-600006
Cage Code: 9M715
Revision A
February 21, 2001

DAS Data Requirement 7

Demand Access System (DAS) Internal Interface Control Document (ICD)

PREPARED BY:

ITT INDUSTRIES
ADVANCED ENGINEERING AND SCIENCES DIVISION (AES)
1761 BUSINESS CENTER DRIVE
RESTON, VA 20190-5337

CHANGE RECORD

Revision	Description	Date	Approved
-	Released per ECF – AQ0010	10/24/00	W.E. Kearns
A	Released per ECF – AQ0036	2/21/01	W.E. Kearns

TABLE OF CONTENTS

SECTION		PAGE
1	**INTRODUCTION**	**1-1**
1.1	Identification	1-1
1.2	System Overview	1-1
1.3	Document Organization	1-1
2	**APPLICABLE DOCUMENTS**	**2-1**
2.1	NASA Documents	2-1
2.2	Commercial documents	2-1
2.3	Document Sources	2-2
2.3.1	DAS Documents	2-2
2.3.2	Commercial Documents	2-2
3	**DAS INTERFACES**	**3-1**
3.1	Common Interfaces	3-1
3.1.1	Mechanical, Electrical Cabling, and Electrical Power	3-1
3.1.1.1	Mechanical	3-1
3.1.1.2	Electrical Cabling	3-1
3.1.1.3	Electrical Power	3-1
3.1.2	Temperature Monitoring Interfaces	3-1
3.1.3	TCP/IP Interfaces	3-2
3.2	Frequency and Timing Data	3-2
3.2.1	Frequency Data	3-2
3.2.2	Timing Data	3-2
3.3	DASCON Data	3-4
3.3.1	DASCON-to-ICON Interface	3-4
3.3.1.1	DASCON “ICON Extended Status” Message	3-4
3.3.1.2	DASCON “TDRS State Vector” Message	3-5
3.3.1.3	DASCON “EMC Switching Command" Message	3-5
3.3.1.4	DASCON “Ephemeris Update” Message Format	3-5
3.3.1.5	DASCON “Fixed Weight Update” Message	3-6
3.3.1.6	DASCON “Configure IBU” Command Message	3-6
3.3.2	DASCON-to-DCON Interface	3-7
3.3.2.1	DASCON “Request DCON Extended Status” Message	3-7
3.3.2.2	DASCON “TDRS State Vector” Message	3-8
3.3.2.3	DASCON “IF Switch Command" Message	3-8
3.3.2.4	DASCON “Ephemeris Update” Message	3-9
3.3.2.5	DASCON “DMU Parameters Update” Command Message	3-9
3.3.2.6	DASCON “Configure DMU Command" Message	3-10
3.3.3	DASCON-to-Data Format/Archive Server (DSER)	3-10
3.3.3.1	DSER “Startup Command" Message	3-11
3.3.3.2	DSER “Customer Configuration Command" Message	3-12
3.3.3.3	"DSER Status” Message	3-14

TABLE OF CONTENTS (Cont'd)

SECTION **PAGE**

3.3.3.4 "DSER Extended Status Report" Command Message 3-15
3.3.3.5 DSER "Purge Request" Command Message 3-15
3.3.3.6 DSER "Deallocate Port Command" Message 3-16
3.3.3.7 DSER "Shutdown Command" Message 3-16
3.4 ICON Data 3-16
3.4.1 ICON-to-DASCON Interface 3-16
3.4.1.1 "ICON Status" Message 3-17
3.4.1.2 "ICON Extended Status" Message 3-18
3.4.2 ICON-to-EMC Switching Interface 3-20
3.4.2.1 ICON "Request EMC Switching Extended Status" Message 3-21
3.4.2.2 ICON "EMC Switching Command" Message 3-21
3.4.3 ICON-to-Beamformer Interface 3-22
3.5 DCON Data 3-22
3.5.1 DCON-to-DASCON Interface 3-22
3.5.1.1 "DCON Status" Message 3-23
3.5.1.2 "DCON Extended Status" Message 3-25
3.5.2 DCON-to-IF Switch Interface 3-26
3.5.3 DCON-to-DMG Interface 3-27
3.5.3.1 DCON "Request DMG Extended Status" Message 3-28
3.5.3.2 DCON "DMU Parameters Update" Message 3-28
3.5.3.3 DCON "Configure DMU Command" Message 3-29
3.5.3.4 DCON "Doppler Correction" Message 3-29
3.5.3.5 DCON "Current Time" Message 3-30
3.5.4 DCON/Temperature Monitor Interface 3-30
3.5.4.1 Serial Interface 3-31
3.5.4.2 Command and Response Messages 3-31
3.6 EMC Switching Interface data 3-32
3.6.1 EMC Interface-to-ICON 3-32
3.6.1.1 "EMC Interface Status" Message 3-33
3.6.1.2 "EMC Interface Extended Status" Message 3-34
3.6.1.3 "EMC Interface Error" Message 3-36
3.7 Beamformer Data 3-37
3.7.1 Beamformer-to-ICON 3-37
3.7.2 Beamformer-to-IF Switch 3-38
3.8 IF switch data 3-38
3.8.1 IF Switch-to-DCON 3-39
3.8.2 IF Switch-to-DMG 3-39
3.9 Demod group (DMG) Data 3-40
3.9.1 DMG-to-DCON 3-40
3.9.1.1 "DMG Status" Message 3-40

TABLE OF CONTENTS (Cont'd)

SECTION **PAGE**

3.9.1.2 "DMG Extended Status" Message 3-41
3.9.2 DMG-to-DSER 3-42
3.10 Data Format/Archive Server (DSER) Data 3-42

LIST OF FIGURES

FIGURE **PAGE**

1-1 DAS Functional Architecture 1-2
3-1 DAS Functional Block Diagram 3-3
3-2 Universal Switching Corporation IF Switch S6400A-01 Schematic 3-38

LIST OF TABLES

TABLE **PAGE**

3.3.1-1 DASCON-to-ICON Data Message Summary 3-4
3.3.1-2 DASCON "Request ICON Extended Status" Command Message Format 3-5
3.3.1-3 DASCON "TDRS State Vector" Message Format 3-5
3.3.1-4 DASCON "EMC Switching" Command Message Format 3-5
3.3.1-5 DASCON "Ephemeris Update" Message Format 3-6
3.3.1-6 DASCON "Fixed Weight Update" Message Format 3-6
3.3.1-7 DASCON "Configure IBU" Command Message Format 3-7
3.3.2-1 DASCON-to-DCON Data Message Summary 3-7
3.3.2-2 DASCON "Request DCON Extended Status" Command Message Format 3-8
3.3.2-3 DASCON "TDRS State Vector" Message Format 3-8
3.3.2-4 DASCON "IF Switch" Command Message Format 3-8
3.3.2-5 DASCON "Ephemeris Update" Message Format 3-9
3.3.2-6 DASCON "DMU Parameters Update" Command Message Format 3-9
3.3.2-7 DASCON "Set DMU State" Command Message Format 3-10
3.3.3-1 DASCON-to-DSER Data Message Summary 3-11
3.3.3-2 DSER "Startup" Command Message Format 3-11
3.3.3-3 DSER "Customer Configuration" Command Message 3-13
3.3.3-4 Representative DSER Module Calls and Descriptions 3-14

TABLE OF CONTENTS (Cont'd)

LIST OF TABLES (Cont'd)

TABLE **PAGE**

3.3.3-5 DSER "Disk Space Status Report" Command Message Format....3-15
3.3.3-6 "DSER Extended Status Report" Command Message Format....3-15
3.3.3-7 DSER "Purge Request" Command Message Format....3-15
3.3.3-8 DSER "Deallocate Port" Command Message Format....3-16
3.3.3-9 DSER "Shutdown" Command Message Format....3-16
3.4.1-1 ICON-to-DASCON Data Message Summary....3-17
3.4.1-2 "ICON Status Report" Message Format....3-17
3.4.1-3 "ICON Extended Status Report" Message Format....3-18
3.4.2-1 ICON-to-EMC Switching Interface Message Summary....3-21
3.4.2-2 ICON "Request EMC Switching Extended Status" Command Message Format....3-21
3.4.2-3 ICON "Change EMC Switching" Command Message Format....3-22
3.5.1-1 DCON-to-DASCON Message Summary....3-23
3.5.1-2 "DCON Status Report" Message Format....3-23
3.5.1-3 "DCON Extended Status Report" Message Format....3-26
3.5.2-1 DCON "IF Switch Control Message" Command Format....3-27
3.5.3-1 DCON-to-DMG Data Message Summary....3-28
3.5.3-2 DCON "Request DMG Extended Status" Command Message Format....3-28
3.5.3-3 DCON "DMU Parameters Update" Command Message Format....3-29
3.5.3-4 DCON "Set DMU State" Command Message Format....3-29
3.5.3-5 DCON "Doppler Correction" Command Message Format....3-30
3.5.3-6 DCON "Current Time" Command Message Format....3-30
3.5.4-1 Serial Interface Characteristics....3-31
3.5.4-2 DCON Temperature Monitor Command and Response Message Formats....3-31
3.6.1-1 EMC Switching to-ICON Message Summary....3-32
3.6.1-2 "EMC Interface Status Report" Message Format....3-33
3.6.1-3 "EMC Interface Extended Status Report" Message Format....3-35
3.6.1-4 EMC Interface "Error" Message Format....3-37
3.7.1-1 Beamformer to-ICON Message Summary....3-37
3.8.1-1 IF Switch Error Code Definitions....3-39
3.9.1-1 DMG-to-DCON Data Message Summary....3-40
3.9.1-2 "DMG Status Report" Message Format....3-40
3.9.1-3 "DMU Extended Status Report" Message Format....3-42

1 INTRODUCTION

1.1 IDENTIFICATION

This Interface Control Document (ICD) specifies the internal interface requirements for the Demand Access System (DAS).

1.2 SYSTEM OVERVIEW

The purpose of the DAS is to allow expansion of the Tracking and Data Relay Satellite System (TDRSS) Multiple Access Return (MAR) capabilities at a relatively low cost. The DAS will build on the Third Generation Multiple Access Beamformer subsystem (TGBFS) development by adding demodulation functions, global system control and coordination functions, and data distribution capabilities. Figure 1-1 provides an overview of the DAS functional architecture. Key features include the following:

- The administration interfaces between the DAS Controller (DASCON) and the White Sands Complex (WSC) are described in NASA Document 451-ICD-DAS/WSC (the ICD between DAS and WSC).
- The interface between the White Sands and Guam Ground Terminals is described in Section 4.6 (GDIS-DAS Interface) of NASA Document 451-ICD-DAS/WSC.
- The interfaces between the DAS and the Space Network Web Services Interface (SWSI) - for planning, controlling, and monitoring customer services - are described in NASA Document 451-ICD-DAS/SWSI (the ICD between the DAS and SWSI).
- The interfaces for telemetry data delivery to DAS customers are described in NASA Document 451-ICD-DAS/Customer (ICD between DAS and DAS Customer).
- Each DAS functional block is provided with mechanical, electrical, and data interfaces as required to meet system and subsystem requirements

1.3 DOCUMENT ORGANIZATION

This document is organized as follows:

- Section 1 provides identification, system overview, and document overview.
- Section 2 lists the applicable documents.
- Section 3 specifies the DAS internal interfaces for each DAS configuration item (CI) as follows:
  - 3.1 Common Interfaces
  - 3.2 Frequency and Timing Data
  - 3.3 DASCON Data
  - 3.4 IBUG Controller (ICON) Data
  - 3.5 Demodulator Controller (DCON) Data

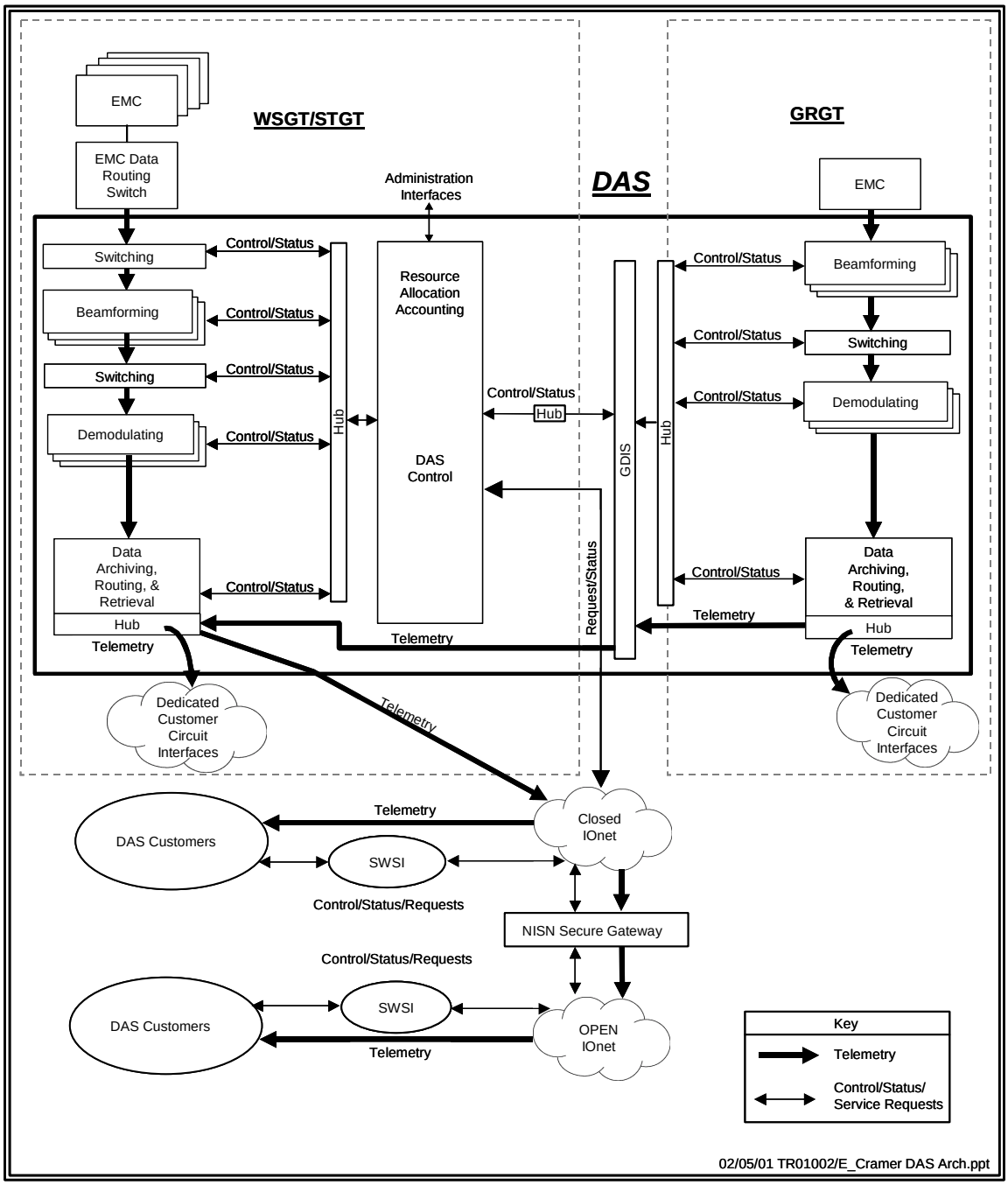

Figure 1-1: DAS Functional Architecture

3.6 EMC Switching Data

3.7 Beamformer Data

3.8 IF Switch Data

3.9 Demodulator Group (DMG) Data

3.10 Archive/Server (DSER) Data

2 APPLICABLE DOCUMENTS

This section lists the documents referenced in this document. Section 2 of the DAS System Specification provides a complete listing of documents applicable to the DAS.

2.1 NASA DOCUMENTS

Document Identification	Document Title
451-ICD-DAS/Customer	Interface Control Document Between the Demand Access System and the Demand Access System Customers
451-ICD-DAS/SWSI	Interface Control Document Between the Demand Access System and the Space Network Web Services Interface
451-ICD-DAS/WSC	Interface Control Document Between the Demand Access System and the White Sands Complex
530-WSC-LOP-VII(1)	Cable Labeling, WSC Handbook (Volume VII, Book 1, Procedure No. 4)
ITT Industries Document No. 033-600004	Demand Access System (DAS) System /Subsystem Specification (Draft)
ITT Industries Document No. 036-140773,	Interface Control Document for the Third--Generation TDRSS MA Beamforming Subsystem (Revision C)
STDN No. 270.5	GSFC Specification Electronic Equipment Racks
STDN-SPEC-8	GSFC General Requirements for STDN Electronic Equipment Installation Materials

2.2 COMMERCIAL DOCUMENTS

Commercial documents specify the requirements for commercial components used within the DAS.

Document Identification	Document Title
AVTEC TM 99-011	Programmable Telemetry Processor (PTP) Remote Interface Library, Programmer's Guide

Lake Shore Cryotronics, Inc.	User's Manual, Model 218 Temperature Monitor
Universal Switching Corporation	Operating and Programming Manual, Model S6400C, Solid State Tri-Stage Coaxial Switching System (Revision C)

2.3 DOCUMENT SOURCES

2.3.1 DAS Documents

DAS documentation should be requested from the DAS Product Manager, Space Networks Project, Code 451, Goddard Space Flight Center, Greenbelt, MD 20771.

2.3.2 Commercial Documents

1. AVTEC Systems, 10530 Rosehaven Street, Suite 300, Fairfax, Virginia 22030, phone (703) 273-2211, facsimile (703) 273-1313, web site www.avtec.com
2. Lake Shore Cryotronics, 575 McCorkle Blvd., Westerville, Ohio 43082-8888, phone (614) 891-1392, facsimile (614) 891-2243, E-mail sales@lakeshore.com, web site www.lakeshore.com
3. Universal Switching Corporation, 7145 Woodley Avenue, Van Nuys, CA 91406, phone (818) 785-0200, facsimile (818) 785-0680, E-mail sales@uswi.com, web site www.uswi.com

3 DAS INTERFACES

Internal DAS interfaces shall meet the interface requirements specified in the DAS System Specification.

3.1 COMMON INTERFACES

This section defines the requirements for interfaces that are common to each DAS functional element: mechanical and power interfaces, temperature monitoring interfaces, and the TCP/IP interface.

3.1.1 Mechanical, Electrical Cabling, and Electrical Power

The Mechanical and Power Subsystem shall provide the infrastructure elements for the structural support, interconnection, and electrical power of the DAS system. Mechanical and power interfaces shall meet the requirements specified in Section 12 of the DAS System/Subsystem Specification.

3.1.1.1 Mechanical

DAS elements shall be housed within 19” rack-mount enclosures conforming to STDN 270.5. Equipment shall be mounted within these enclosures using commercial off-the-shelf (COTS) rack slides, shelves, and cable control equipment. Each rack enclosure shall be ventilated through the floor using convection cooling provided by the site.

3.1.1.2 Electrical Cabling

DAS elements shall be interconnected using cables and connectors conforming to STDN SPEC-8, where possible. Where the specific requirements of STDN SPEC-8 cannot be met, interconnect cables shall be designed using: 1.) Parts which most closely approximate their obsolete reference; or 2.) The same parts as are installed in similar systems for NASA use, or 3.) High quality parts that meet the STDN SPEC-8 requirements, selected for ease of repair and availability. All interconnect cables constructed for DAS shall be marked and identified in accordance with 530-WSC-LOP-VII(1)(Procedure No. 4: Cable Labeling), as directed by NASA.

3.1.1.3 Electrical Power

DAS elements shall be provided electrical power from a power outlet strip mounted to the near side of each rack conforming to STDN 270.5. Each rack shall be provided with dedicated AC service which provides single-phase, 120 VAC (nominal) power to the vertically-mounted power outlet strip. Service to each rack shall be rated at 20 amperes maximum, and an additional service shall be added to racks with a utility outlet strip (for external test equipment) to power the strip. Overload protection for each rack shall be provided by means of site-provided breakers rated for up to 20 amperes continuous service.

3.1.2 Temperature Monitoring Interfaces

Temperature monitoring shall be performed by Lake Shore DT-470 temperature sensors. The sensors shall measure the temperature of the air being exhausted from each equipment rack, and in the case of the

DCON rack, shall also measure the inlet air temperature. Temperature sensor interfaces shall conform to the manufacturer's specifications outlined in Chapter 3 of the Lake Shore Model 318 User's Manual.

3.1.3 TCP/IP Interfaces

DAS elements shall use the TCP/IP protocol over 10BaseT Ethernet infrastructure that shall use Category 5 unshielded twisted-pair (UTP) cables and RJ-45 connectors. Figure 3-1 provides an overview of the physical interconnections of DAS functional elements, including hubs and switches. The hubs shall provide a common connection point between DAS elements and shall be in a logical layout that makes most cost-effective use of cabling. Hubs shall be provided and located with future expansion in mind.

The rates and protocols for each DAS Ethernet interface shall be 10BaseT with TCP/IP with one exception: the interface between the Ethernet switch and the Archive/Server Subsystem. This interface shall be 100BaseT because the Ethernet switch bundles the 10BaseT inputs from multiple Demodulator Groups to send them to the Archive/Server Subsystem.

3.2 FREQUENCY AND TIMING DATA

The Frequency and Timing Subsystem includes a frequency distribution amplifier and an IRIG-G/IRIG-B Time Code Converter. As outlined in Section 4.5 of the DAS/WSC ICD, the frequency distribution amplifier receives a prime and redundant 10MHz frequency signal and one pulse-per-second (pps) time ticks from the Central Time and Frequency System (CTFS) at WSC and GRGT. Within DAS, the frequency references and time ticks are sent to the DMGs. The Time Code Converter receives IRIG-G data from the CTFS and provides four IRIG-B outputs to the following DAS Subsystems: the Archive/Server (DSER), DCON, ICON, and DASCON.

3.2.1 Frequency Data

The 10 MHz Distribution Amplifier takes a redundant 10 MHz input and distributes the signal to up to 10 outputs. The DAS 10 MHz Distribution Amplifier outputs the 10 MHz signal to up to eight DMGs. The input from the external site is passed through a custom Balun at the rear of the distribution amplifier that converts the input signal from the balanced 100 ohm input specified in the DAS/WSC ICD to a 50-ohm, unbalanced signal using a BNC coaxial connection. The output of the Datum 9611 Distribution Amplifier provides a unity gain copy of the input signal to each BNC output. Pushbuttons on the front of the amplifier allow the device to automatically switch to a redundant input when the primary signal is lost.

3.2.2 Timing Data

The Brandywine GPS80J Time Code Converter has been modified to handle the IRIG-G and RS-422 formatted one-pps inputs from the site (as presented in the DAS/WSC ICD), and to convert them to an

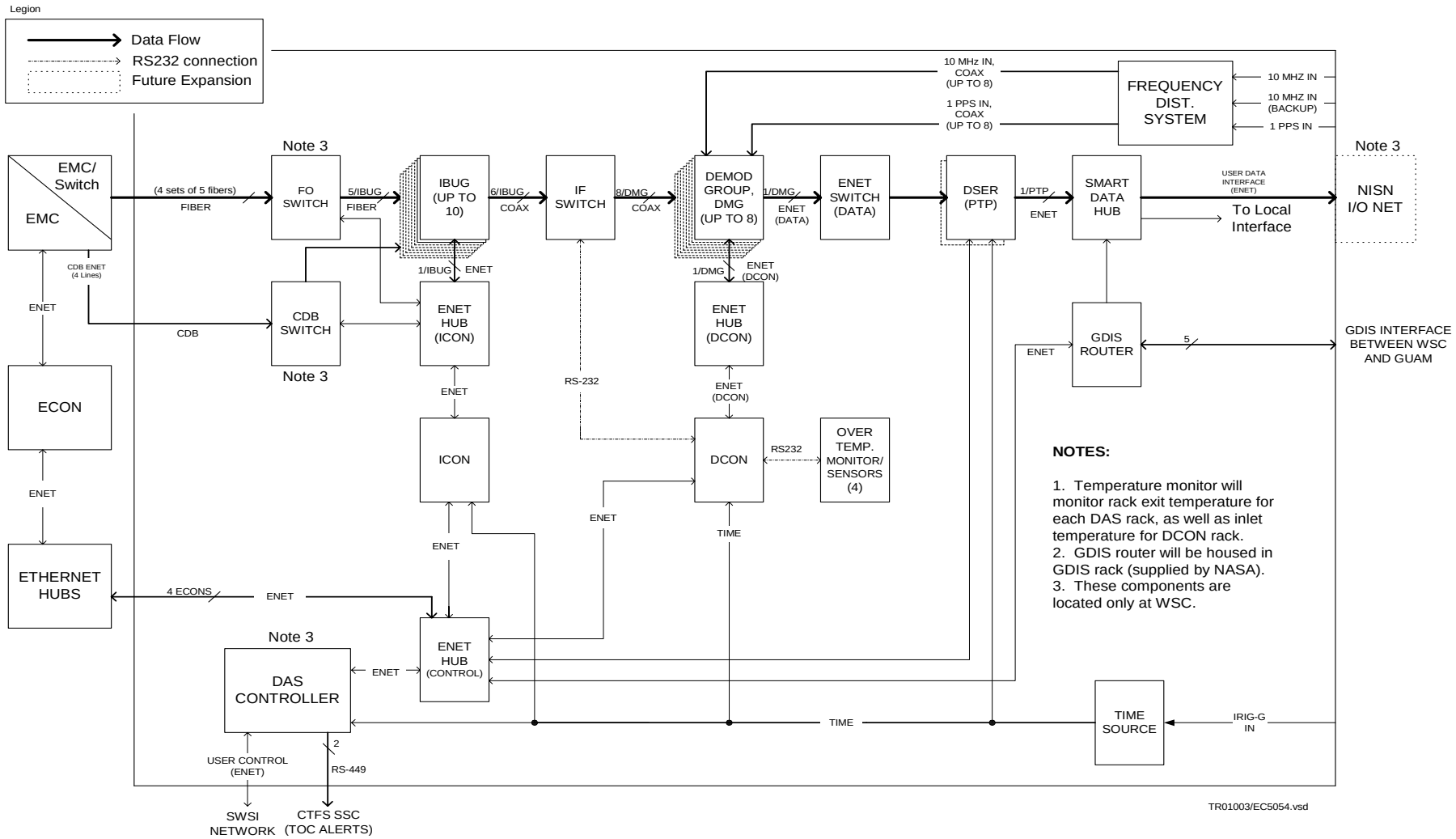

Figure 3-1: DAS Functional Block Diagram

IRIG-B and one-pps TTL-level signals, respectively. The box converts the single TNC-terminated IRIG-G input to up to four BNC-terminated IRIG-B outputs. The outputs are then distributed to the ICON, DCON, DASCON, and the DSER. If more than 3 DMGs are used in an expanded DAS system, a second DSER will be needed, and the IRIG-B output from one of the Time Code converters is planned to be used as an input to a separate IRIG-B distribution amplifier box to fan the time code out to the desired number of clock inputs.

The one-pps signal is sent via a twinax cable as specified in the DAS/WSC ICD. This signal is then converted to 10 single-ended, BNC-terminated signals that have TTL-compatible outputs. For the purposes of this interface, the TTL-Compatible outputs shall be capable of driving a 50-ohm output to a two-volt level with the signaling sense of the center pin of the twinax connector. Each of these BNC terminated signals is then capable of driving a single DMG.

3.3 DASCON DATA

This section defines the data that the DASCON Subsystem shall send to other subsystems. The physical data interfaces between the DASCON and the ICON, DCON, and DSER subsystems and the GDIS router shall be TCP/IP sockets and shall use the formatted messages specified in this section. DAS internal messages shall include a message type as part of the header information.

3.3.1 DASCON-to-ICON Interface

Table 3.3.1-1 provides a summary of the data messages initiated from the DASCON to the IBUG Controller (ICON).

Table 3.3.1-1: DASCON-to-ICON Data Message Summary

Msg. Type	Title	Function
0	ICON Extended Status	To request that the ICON send an Extended Status Message
1	ICON TDRS State Vector Message	To update the ICON's TDRS state vectors
2	EMC Switching Command	To command EMC connection to IBUG(s)
3	ICON Ephemeris Update	To update the ICON's ephemeris files for the Customer's mission
4	Fixed Weight Update	To update the ICON's fixed weight files for the Customer's mission
5	Configure IBU Command	To command the mode setting for designated IBU(s)

3.3.1.1 DASCON "ICON Extended Status" Message

Table 3.3.1-2 provides the format for the DASCON "ICON Extended Status" command message.

Table 3.3.1-2: DASCON "ICON Extended Status" Command Message Format

Field Length Bytes	BitsReq.	Format/ Type	Value/ Range	Bit Num./ Units	Description
4	4	ENUM	0	0-3	Message Type: 0 (ICON Extended Status)
	28	BIN	N/A	4-31	Spares

3.3.1.2 DASCON "TDRS State Vector" Message

Table 3.3.1-3 provides the format for the "TDRS State Vector" message.

Table 3.3.1-3: DASCON "ICON TDRS State Vector" Message Format

Field Length Bytes	BitsReq.	Format/ Type	Value/ Range	Bit Num./ Units	Description
4	3	ENUM	1	0-2	Message Type: 1 (TDRS State Vector)
	29	BIN	N/A	3-31	Spares
4	3	ENUM	1,2,4,5,6	0-2	EMC ID
	3	ENUM	1-6	3-5	TDRS ID
	26	BIN	N/A	6-31	Spares
4	32	Long		0-31	Yyyy:ddd:hh:mm:ss.uuuuuu
8	64	Double		0-63	TDRS X Coordinate (km)
8	64	Double		0-63	TDRS Y Coordinate (km)
8	64	Double		0-63	TDRS Z Coordinate (km)
8	64	Double		0-63	TDRS X Velocity (km/s)
8	64	Double		0-63	TDRS Y Velocity (km/s)
8	64	Double		0-63	TDRS Z Velocity (km/s)

3.3.1.3 DASCON "EMC Switching Command" Message

Table 3.3.1-4 provides the format for the DASCON "EMC Switching Command" message.

Table 3.3.1-4: DASCON "EMC Switching Command" Message Format

Field Length Bytes	BitsReq.	Format/ Type	Value/ Range	Bit Num./ Units	Description
4	3	ENUM	2	0-2	Message Type: 2 (EMC Switching)
	29	BIN	N/A	3-31	Spares
4	3	ENUM	1,2,4,5,6	0-2	EMC Number
	4	ENUM	1-10	3-6	IBUG Number
	25	BIN	N/A	7-31	Spares

3.3.1.4 DASCON "ICON Ephemeris Update" Message Format

Table 3.3.1-5 provides the format for the DASCON "ICON Ephemeris Update" message.

Table 3.3.1-5: DASCON "ICON Ephemeris Update" Message Format

Field Length Bytes	BitsReq.	Format/ Type	Value/ Range	Bit Num./ Units	Description
4	3	ENUM	3	0-2	Message Type: 3 (Ephemeris Update)
	29	BIN	N/A	3-31	Spares
4	4	ENUM	1-10	0-3	IBUG Number
	3	ENUM	1-6	4-6	IBU Number
	1	ENUM	0 or 1	7	Customer Type 0 – orbiting 1 – ground (use lat/long)
	24	BIN	N/A	8-31	Spares
4	32	Long		0-31	Yyyy:ddd:hh:mm:ss.uuuuuu
8	64	Double		0-63	Customer X Coordinate (km)
8	64	Double		0-63	Customer Y Coordinate (km)
8	64	Double		0-63	Customer Z Coordinate (km)
8	64	Double		0-63	Customer X Velocity (km/s)
8	64	Double		0-63	Customer Y Velocity (km/s)
8	64	Double		0-63	Customer Z Velocity (km/s)
8	64	Double	-90 to 90	0-63	Customer Latitude (deg)
8	64	Double	-180 to 180	0-63	Customer Longitude (deg)

3.3.1.5 DASCON "Fixed Weight Update" Message

Table 3.3.1-6 provides the format for the DASCON "Fixed Weight Update" message.

Table 3.3.1-6: DASCON "Fixed Weight Update" Message Format

Field Length Bytes	BitsReq.	Format/ Type	Value/ Range	Bit Num./ Units	Description
4	3	ENUM	4	0-2	Message Type: 4 (Fixed Weight Update)
	29	BIN	N/A	3-31	Spares
4	4	ENUM	1-10	0-3	IBUG Number
	3	ENUM	1-6	4-6	IBU Number
	1	ENUM	0 or 1	7	Customer Type 0 – orbiting 1 – ground (use lat/long)
	24	BIN	N/A	8-31	Spares
4	16	BIN	-2048 to 2047	0-15	Element 1 Real Weight
	16	BIN	-2048 to 2047	16-31	Element 1 Imaginary Weight
…	…	…	…	…	…
4	16	BIN	-2048 to 2047	0-15	Element 30 Real Weight
	16	BIN	-2048 to 2047	16-31	Element 30 Imaginary Weight

3.3.1.6 DASCON "Configure IBU Command" Message

Table 3.3.1-7 provides the format for the DASCON "Configure IBU Command" message. Before sending a "Configure IBU Command message, the DASCON shall have set up the current ephemeris, current fixed weights, or direction cosines depending on the IBU Mode selected.

Table 3.3.1-7: DASCON "Configure IBU Command" Message Format

Field Length Bytes	BitsReq.	Format/ Type	Value/ Range	Bit Num./ Units	Description
4	3	ENUM	5	0-2	Message Type: 5 (Configure IBU)
	29	BIN	N/A	3-31	Spares
4	4	ENUM	1-10	0-3	IBUG Number
	3	ENUM	1-6	4-6	IBU Number
	1	ENUM	0 or 1	7	Target Type 0 – orbiting 1 – ground (use lat/long)
	24	BIN	N/A	8-31	Spares
4	3	ENUM	0-5	0-2	IBU Mode 0 = Off 1 = Fixed Weight Mode (FWM) 2 = FWM w/Calibration 3 = FWM w/Adaptive 4 = Adaptive Mode 5 = Pointing Mode
	29	BIN	N/A	3-31	Spares

3.3.2 DASCON-to-DCON Interface

The DASCON shall interface with one or more Demodulator Controllers (DCONs) to:

1. Control the demodulation modes in each demodulator.
2. Monitor the health and status of the Demodulator Groups (DMGs).
3. Monitor the DMGs' administered control cycle.

Table 3.3.2-1 provides a summary of the data messages initiated from the DASCON to the DCON.

Table 3.3.2-1: DASCON-to-DCON Data Message Summary

Msg. Type	Title	Function
0	DCON Extended Status	To request that the DCON send an Extended Status Message
1	DCON TDRS State Vector Message	To update the DCON's TDRS state vectors
2	IF Switch Command	To connect an IBU to a DMU
3	DCON Ephemeris Update	To update the DCON's ephemeris files for the Customer's mission
4	DMU Parameter Update	To update the DCON's Demodulator Unit (DMU) files
5	Configure DMU Command	To command the state setting for designated DMU(s)

3.3.2.1 DASCON "DCON Extended Status" Message

Table 3.3.2-2 provides the format for the DASCON "DCON Extended Status" command message.

Table 3.3.2-2: DASCON "DCON Extended Status" Command Message Format

Field Length Bytes	BitsReq.	Format/ Type	Value/ Range	Bit Num./ Units	Description
4	3	ENUM	0	0-2	Message Type:0 (Request Extended Status)
	29	BIN	N/A	3-31	Spares
4	4	ENUM	1-10	0-3	DMG Number
	28	BIN	N/A	4-31	Spares

3.3.2.2 DASCON "DCON TDRS State Vector" Message

Table 3.3.2-3 provides the format for the DASCON "DCON TDRS State Vector" message.

Table 3.3.2-3: DASCON "DCON TDRS State Vector" Message Format

Field Length Bytes	BitsReq.	Format/ Type	Value/ Range	Bit Num./ Units	Description
4	3	ENUM.	1	0-2	Message Type: 1 (TDRS State Vector)
	29	BIN	N/A	3-31	Spares
4	3	ENUM	1-6	0-2	TDRS ID
	29	BIN	N/A	3-31	Spares
24	N/A	CharPtr	N/A	N/A	Time valid in format yyyy:ddd:hh:mm:ss.uuuuuu
8	64	Double		0-63	TDRS X Coordinate (km)
8	64	Double		0-63	TDRS Y Coordinate (km)
8	64	Double		0-63	TDRS Z Coordinate (km)
8	64	Double		0-63	TDRS X Velocity (km/s)
8	64	Double		0-63	TDRS Y Velocity (km/s)
8	64	Double		0-63	TDRS Z Velocity (km/s)

3.3.2.3 DASCON "IF Switch Command" Message

Table 3.3.2-4 provides the format for the DASCON "IF Switch Command" message.

Table 3.3.2-4: DASCON "IF Switch Command" Message Format

Field Length Bytes	BitsReq.	Format/ Type	Value/ Range	Bit Num./ Units	Description
4	3	ENUM	2	0-2	Message Type: 2 (IF Switch)
	29	BIN	N/A	3-31	Spares
4	4	ENUM	1-10	0-3	IBUG Number
	4	ENUM	1-6	4-7	IBU Number
	4	ENUM	1-8	8-11	DMG Number
	4	ENUM	1-8	12-15	DMU Number
	3	ENUM	1-6	16-18	TDRS ID
	13	BIN	N/A	19-31	Spares

3.3.2.4 DASCON "DCON Ephemeris Update" Message

The purpose of the Table 3.3.2-5 provides the format for the DASCON "DCON Ephemeris Update" message.

Table 3.3.2-5: DASCON "DCON Ephemeris Update" Message Format

Field Length Bytes	BitsReq.	Format/ Type	Value/ Range	Bit Num./ Units	Description
4	3	ENUM	3	0-2	Message Type:3 (Ephemeris Update)
	29	BIN	N/A	3-31	Spares
4	4	ENUM	1-8	0-3	DMG Number
	4	ENUM	1-8	4-7	DMU Number
	1	ENUM	0 or 1	8	Customer Type 0 – Orbiting 1 – Ground (use lat/long)
	23	BIN	N/A	9-31	Spares
24	N/A	CharPtr	N/A	N/A	Time valid in format yyyy:ddd:hh:mm:ss.uuuuuu
8	64	Double		0-63	Customer X Coordinate (km)
8	64	Double		0-63	Customer Y Coordinate (km)
8	64	Double		0-63	Customer Z Coordinate (km)
8	64	Double		0-63	Customer X Velocity (km/s)
8	64	Double		0-63	Customer Y Velocity (km/s)
8	64	Double		0-63	Customer Z Velocity (km/s)
8	64	Double	-90 to 90	0-63	Customer CS Latitude (deg)
8	64	Double	-180 to +180	0-63	Customer CS Longitude (deg)

3.3.2.5 DASCON "DMU Parameters Update" Command Message

Table 3.3.2-6 provides the format for the DASCON "DMU Parameters Update" command message.

Table 3.3.2-6: DASCON "DMU Parameters Update" Command Message Format

Field Length Bytes	BitsReq.	Format/ Type	Value/ Range	Bit Num./ Units	Description
4	3	ENUM	4	0-2	Message Type:4 (DMU Parameters Update)
	29	BIN	N/A	3-31	Spares
4	4	ENUM	1-8	0-3	DMG Number
	4	ENUM	1-8	4-7	DMU Number
	3	ENUM	1-7	8-10	TDRS ID
	21	BIN	N/A	11-31	Spares
4	32	Long	5000-5063	0-31	Port Number

Table 3.3.2-6: DASCON "DMU Parameters Update" Command Message Format *(Cont'd)*

Field Length Bytes	BitsReq.	Format/ Type	Value/ Range	Bit Num./ Units	Description
4	32	ENUM	1-85	0-31	Enumerated PN Code as per 451-PN Code-SNIP
4	32	Long	1000-150000	0-31	Bits per second
4	1	ENUM	0 or 1	0	Modulation SQPN (1 – true/0- false)
	1	BIN	0 or 1	1	G2 Inversion
	1	ENUM	0 or 1	2	Symbol Format 0 – NRZ 1 – Biphase
	2	ENUM	0-2	3-4	Data Format 0 – NRZ-L 1 – NRZ-S 2 – NRZ-M
	1	ENUM	0-1	5	Carrier Uncertainty 0 – 700 Hz 1 – 3000 Hz
	26	BIN	N/A	6-31	Spares
4	32	Long	-100000 - 100000	0-31	Carrier Offset (Hz)

3.3.2.6 DASCON "Configure DMU Command" Message

Table 3.3.2-7 provides the format for the DASCON "Configure DMU Command" message.

Table 3.3.2-7: DASCON "Configure DMU Command" Message Format

Field Length Bytes	BitsReq.	Format/ Type	Value/ Range	Bit Num./ Units	Description
4	3	ENUM	5	0-2	Message Type: 5 (Set DMU State)
	29	BIN	N/A	3-31	Spares
4	4	ENUM	1-8	0-3	DMG Number
	4	ENUM	1-8	4-7	DMU Number
	2	ENUM	0-1	8-9	Set DMU State (0 – Deallocate/1-Deallocate with BIST; 3-Allocate/4-Reacquire)
	22	BIN	N/A	10-31	Spares
24	N/A	CharPtr	N/A	N/A	Time valid in format yyyy:ddd:hh:mm:ss.uuuuuu
4	32	Long		0-31	Initial Doppler Correction

3.3.3 DASCON-to-Data Format/Archive Server (DSER)

The DAS will use AVTEC Programmable Telemetry Processors (PTPs) to perform Customer data formatting, data transmission, retransmission of archived data, and archive server (DSER) functions. DASCON will remotely control the AVTEC PTPs via an Ethernet hub using remote interface library

commands, i.e., API function calls, to the PTP controller. Details of operation are provided in AVTEC's PTP Remote Interface Library Programmer's Guide.

Table 3.3.3-1 provides a summary of the data messages initiated from the DASCON to the DSER.

Table 3.3.3-1: DASCON-to-DSER Data Message Summary

Msg. Type	Title	Function
0	DSER Startup Command	To initialize the DSER equipment at "power on".
1	DSER Customer Configuration Command	To specify the details of the required DSER Customer service
2	DSER Status	To report disk space status on a routine basis
3	DSER Extended Status	To report the status of DASCON-specified DSER parameters and components
4	DSER Purge Request	To specify files to be deleted from the DSER
5	DSER Deallocate Port Command	To deallocate specified DSER port(s)
6	DSER Shutdown Command	To end DSER Customer support

The DASCON data messages in the foregoing table have been defined using API function calls defined in the AVTEC documentation. It should be noted that each API function call has a pre-defined set of potential responses, and that these responses represent the "status" messages from the DSER to the DASCON. For convenience, these responses have been included in the following tables that define the command messages.

3.3.3.1 DASCON "DSER Startup Command" Message

Table 3.3.3-2 provides the format for the DSER "Startup Command" message.

Table 3.3.3-2: DASCON "DSER Startup Command" Message Format

API Function Call	Function Arguments	Function Return Value/Range	Description
PtpConnectToServer	const char *serverIPAddress	Returns socket file descriptor if successful, negative otherwise	Connects DASCON to DSER and the DSER to DMGs via socket interfaces
	PTP_32 serverIPPort		
ptpDisableModuleEx	PTP_16 Socket – socket ID	Returns nonnegative if successful, negative otherwise	Clears all previously loaded modules (**Note 1)** and stops the flow of data through all modules in the system
	PTP_32 module – module instance		

Table 3.3.3-2: DASCON "DSER Startup Command" Message Format *(Cont'd)*

API Function Call	Function Arguments	Function Return Value/Range	Description
PtpLoadModuleEx	PTP_32 moduleType - defines the type of module to load	Returns module handle ID if successful, negative otherwise	Loads instances of the specified modules. Modules can be specified by type or by name
	Const char *moduleName - pointer to a string containing the module name		
	PTP_32 resource - defines the serial I/O board or auxiliary I/O board to bind to		
	void *params - a pointer to the module specific parameters structure		
	PTP_32 *module - returns a handle to the module instance		
ptpEnableAllModulesAllServers	None	Returns nonnegative if successful, negative otherwise	Enables all loaded modules on all connected servers
Note 1: The AVTEC PTP uses "modules" to store predefined execution files such as Customer data protocols and PTP functions such as recording, playback, and spooling.			

3.3.3.2 DASCON "DSER Customer Configuration Command" Message

Table 3.3.3-3 provides the format for the DSER "Customer Configuration Command" message.

Table 3.3.3-3: DSER "Customer Configuration Command" Message Format

API Function Call	Function Arguments	Function Return Value/Range	Description
PtpCreateNewConfigurationEx	PTP_16 Socket – socket ID	Returns nonnegative if successful, negative otherwise	Creates a new PTP Customer configuration (no modules loaded)
PtpConnectModuleEventEx	PTP_16 Socket – socket ID	Returns nonnegative if successful, negative otherwise	Lines up the paths from source modules to destination modules
	PTP_32 sourceModule – source module name		
	PTP_32 destinationModule – destination module name		
	PTP_32 portIndex - specifies which source module output port		
	PTP_32 reserved – reserved for future expansion		
PtpConnectModuleDataEx	PTP_16 Socket – socket ID	Returns nonnegative number if successful, negative otherwise	Establishes the sequence of data flows through the designated modules
	PTP_32 sourceModule – source module ID		
	PTP_32 destinationModule – destination module ID		
	PTP_32 portIndex – source module output port		
	PTP_32 reserved – reserved for future use		
ptpGetModuleStateEx	PTP_16 Socket – socket ID	Returns the module type (nonnegative) if successful, negative otherwise	Specifies the current configuration parameters for designated modules
	PTP_32 moduleHandle – module instance		
	char *params – current module parameters		
	PTP_32 paramsSize – size of parameters		
PtpSetModuleStateEx	PTP_16 Socket – socket ID	Returns nonnegative if successful, negative otherwise	Sets required values for the designated modules
	PTP_32 moduleHandle – module instance		
	PTP_32 moduleType – module type		
	char *params – module control structure		
	PTP_32 paramsSize – size of module control structure		
PtpEnableAllModulesEx	PTP_16 Socket –socket ID	Returns nonnegative if successful, negative otherwise	Enables designated modules

Table 3.3.3-4 provides representative examples of the modules that the DAS will use.

Table 3.3.3-4: Representative DSER Module Calls and Descriptions

Module Call	Description
M0401_NetworkSockets	The Socket Module supports data transfer to/from a network interface
PTP_NASCOM_DEBLK_MODULE	The NASCOM Deblocker Module accepts NASCOM 4800BB based on user-defined Block Header Filter and outputs a serial telemetry data stream
PTP_CCSDS_VCP_MODULE	The CCSDS VCP receives frame data with quality annotation from another module. it filters frames based on VCID and data quality and outputs accepted frames to downstream modules
PTP_CCSDS_BITSTREAM_MODULE	This module processes each incoming stream of bits into blocks whose lengths are arranged so that they may be exactly loaded into the fixed-length data unit zone of a virtual channel data unit(VCDU) on a dedicated virtual channel(VC). Reassembly of the contiguous stream of bits at the receiving service interface is performed. If the fill data are inserted during the transfer, they are removed prior to the delivery. The bit stream data may be transferred either asynchronously or isochronously
PTP_SOFTSYNC_MODULE	This module accepts a stream of data and frame synchronizes it
PTP_IPDUFORMATTER_MODULE	The IPDU (Internet Packet Data Unit) formatter module encapsulates data for transmission across the network. The IPDU formatter accepts data buffers from other modules and prepends the IPDU header. The IPDU formatter outputs the IPDU packet (header and data)
PTP_ACE_SFDUFORMATTER_MODULE	The ACE SFDU module supports encapsulation of telemetry frames with a Standard Formatted Data Unit header. The header format is based on the definitions for the Advanced Composition Explorer
PTP_AXAF_SFDUFORMATTER_MODULE	The AXAF SFDU module supports encapsulation of telemetry frames with a standard formatted data unit header. The header format is based on the definitions for the advanced x-ray astrophysics facility
PTP_LEOT_TFDHTRANSMITTER_MODULE	The LEO-T TFDH (Telemetry Frame Delivery Header) Transmitter Module encapsulates data for transmission across the network. The LEO-T TFDH Transmitter accepts data buffers from other modules and prepends the TFDH header. The LEO-T TFDH Transmitter outputs the TFDH packet (header and data)
PTP_DST_SFDUFORMATTER_MODULE	The ACE SFDU module supports encapsulation of telemetry frames with a standard formatted data unit header
PTP_RECORDER_MODULE	The recorder module supports logging binary data to hard disk
PTP_PLAYBACK_MODULE	The playback module supports reading binary data from hard disk or cd-rom and transferring it to another module
PTP_SPOOLER_MODULE	The Spooler takes data from one module spools the data into a file on the local hard drive or a piped device, and plays back the data to another module (i.e. Network Sockets) at a different (faster or slower) rate

3.3.3.3 DASCON "DSER Status" Message

Table 3.3.3-5 provides the format for the DASCON "DSER Status" command message.

Table 3.3.3-5: DASCON "DSER Status" Command Message Format

API Function Call	Function Arguments	Function Return Value/Range	Description
PtpGetDriveSpace	char* ptpAddress - IP address of PTP	Returns nonnegative if successful, negative otherwise	Gets drive space information.
	char *path – Defines the drive		
	PTP_MONITOR_DISKSPACE *InfoDist – Disk space parameters output structure		
	int DstSize – Size of the InfoDist structure		

3.3.3.4 DASCON "DSER Extended Status" Message

Table 3.3.3-6 provides the format for the DASCON "DSER Extended Status" command message.

Table 3.3.3-6: DASCON "DSER Extended Status" Command Message Format

API Function Call	Function Arguments	Function Return Value/Range	Description
ptpGetEnableStatusEx	PTP_16 Socket – PTP Socket descriptor	Returns a 64 bit mapped nonnegative value if successful, negative otherwise.	Retrieves the current enable status of all modules.

3.3.3.5 DASCON "DSER Purge Request" Message

Table 3.3.3-7 provides the format for the DASCON "DSER Purge Request" command message.

Table 3.3.3-7: DASCON "DSER Purge Request" Command Message Format

API Function Call	Function Arguments	Function Return Value/Range	Description
PtpCallFileCleanup	char* ptpAddress - IP address of PTP	< 0 – Error >= 0 - Number of files deleted	Deletes the designated files
	PTP_MONITOR_FILECLEANUPVARS *InfoInOut - File filtering specifications structure		
	int Size – Size of the InfoInOut structure		

3.3.3.6 DASCON "DSER Deallocate Port Command" Message

Table 3.3.3-8 provides the format for the DASCON "DSER Deallocate Port Command" message.

Table 3.3.3-8: DASCON "DSER Deallocate Port Command" Message Format

API Function Call	Function Arguments	Function Return Value/Range	Description
PtpGetDesktopIdEx	PTP_16 Id	Returns nonnegative if successful, negative otherwise	Gets the desktop ID and the parent desktop ID
	ULONG * DesktopId – desktop ID		
	ULONG * ParentDesktopId – parent desktop ID		
PtpDisableModuleEx	PTP_16 Socket – socket ID	Returns nonnegative if successful, negative otherwise	Disables a particular instance of a module
	PTP_32 module – module instance		

3.3.3.7 DASCON "DSER Shutdown Command" Message

Table 3.3.3-9 provides the format for the DASCON "DSER Shutdown Command" message.

Table 3.3.3-9: DASCON "DSER Shutdown Command" Message Format

API Function Call	Function Arguments	Function Return Value/Range	Description
ptpDisableAllModulesEx	PTP_16 Socket	Returns nonnegative if successful, negative otherwise	Disables all loaded modules.
ptpDisconnectFromServerEx	PTP_16 Socket	Returns nonnegative if successful, negative otherwise	Closes control socket

3.4 ICON DATA

The ICON shall be capable of controlling up to 10 IBUGs and one EMC Switching Interface. The ICON shall send status information to the DASCON and shall send commands or requests for information to the EMC Switch and the beamforming units (IBUs).

3.4.1 ICON-to-DASCON Interface

Table 3.4.1-1 provides a summary of the data messages initiated from the ICON to the DASCON.

Table 3.4.1-1: ICON-to-DASCON Data Message Summary

Msg. Type	Title	Function
0	ICON Status	To report the status of the beamforming function
1	ICON Extended Status	To report additional beamforming parameters to DASCON

3.4.1.1 "ICON Status" Message

Table 3.4.1-2 provides the format for the "ICON Status" message.

Table 3.4.1-2: "ICON Status" Message Format

Field Length Bytes	BitsReq.	Format/ Type	Value/ Range	Bit Num./ Units	Description
4	4	ENUM	0	0-3	Message Type: 0 (Status Report)
	28	BIN	N/A	4-31	Spares
4	1	BIN	0 or 1	0	ICON Status: 1 – Alert 0 – No Alert
	1	BIN	0 or 1	1	FO Switch Status: 1 – Alert 0 – No Alert
	10	BIN	0 or 1		IBUG Present (1 – Present/0 – Not Present)
				2	IBUG 1
				3	IBUG 2
				4	IBUG 3
				5	IBUG 4
				6	IBUG 5
				7	IBUG 6
				8	IBUG 7
				9	IBUG 8
				10	IBUG 9
				11	IBUG 10
	10	BIN	0 or 1		IBUG Alert (1 – Alert/0 – No Alert)
				12	IBUG 1
				13	IBUG 2
				14	IBUG 3
				15	IBUG 4
				16	IBUG 5
				17	IBUG 6
				18	IBUG 7
				19	IBUG 8
				20	IBUG 9
				21	IBUG 10

3.4.1.2 "ICON Extended Status" Message

Table 3.4.1-3 provides the format for the "ICON Extended Status" message.

Table 3.4.1-3: "ICON Extended Status" Message Format

Field Length Bytes	BitsReq.	Format/ Type	Value/ Range	Bit Num./ Units	Description
4	4	ENUM	1	0-3	Message Type: 1
	28	BIN	N/A	4-31	Spares
16	6	BIN	0 or 1		IBU Present of IBUG 1 (1 – Present/0 - Present)
				0	IBU 1
				1	IBU 2
				2	IBU 3
				3	IBU 4
				4	IBU 5
				5	IBU 6
	6	BIN	0 or 1		IBU Alert of IBUG 1 (1 - Alert/0 - No Alert)
				6	IBU 1
				7	IBU 2
				8	IBU 3
				9	IBU 4
				10	IBU 5
				11	IBU 6
	6	BIN	0 or 1		IBU Present of IBUG 2 (1 – Present/0 - Present)
				12	IBU 1
				13	IBU 2
				14	IBU 3
				15	IBU 4
				16	IBU 5
				17	IBU 6
	6	BIN	0 or 1		IBU Alert of IBUG 2 (1 - Alert/0 - No Alert)
				18	IBU 1
				19	IBU 2
				20	IBU 3
				21	IBU 4
				22	IBU 5
				23	IBU 6
	. . .	. . .	. . .	. . .	. . .

Table 3.4.1-3: "ICON Extended Status" Message Format *(Cont'd)*

Field Length Bytes	BitsReq.	Format/ Type	Value/ Range	Bit Num./ Units	Description
	6	BIN	0 or 1		IBU Present of IBUG 10 (1 – Present/0 - Present)
				108	IBU 1
				109	IBU 2
				110	IBU 3
				111	IBU 4
				112	IBU 5
				113	IBU 6
	6	BIN	0 or 1		IBU Alert of IBUG 10 (1 - Alert/0 - No Alert)
				114	IBU 1
				115	IBU 2
				116	IBU 3
				117	IBU 4
				118	IBU 5
				119	IBU 6
	8	BIN	N/A	120-127	Spares
4	10	BIN	0 or 1		EMC Interface Status (1 – Alert/0 – No Alert)
				0	IBUG 1
				1	IBUG 2
				2	IBUG 3
				3	IBUG 4
				4	IBUG 5
				5	IBUG 6
				6	IBUG 7
				7	IBUG 8
				8	IBUG 9
				9	IBUG 10
	10	BIN	0 or 1		IBUG Interface Status (1 – Alert/0 – No Alert)
				10	IBUG 1
				11	IBUG 2
				12	IBUG 3
				13	IBUG 4
				14	IBUG 5
				15	IBUG 6
				16	IBUG 7
				17	IBUG 8
				18	IBUG 9
				19	IBUG 10
	12	BIN	N/A	20-31	Spares

***Table 3.4.1-3: "ICON Extended Status" Message Format** (Cont'd)*

Field Length Bytes	BitsReq.	Format/ Type	Value/ Range	Bit Num./ Units	Description
4	10	BIN	0-2		IBUG Operating Mode (0 – Online/1 – Offline)
				0	IBUG 1
				1	IBUG 2
				2	IBUG 3
				3	IBUG 4
				4	IBUG 5
				5	IBUG 6
				6	IBUG 7
				7	IBUG 8
				8	IBUG 9
				9	IBUG 10
	10	BIN	O or 1		IBUG Control Mode (1 – Local/0 – Remote)
				10	IBUG 1
				11	IBUG 2
				12	IBUG 3
				13	IBUG 4
				14	IBUG 5
				15	IBUG 6
				16	IBUG 7
				17	IBUG 8
				18	IBUG 9
				19	IBUG 10
	12	BIN	N/A	20-31	Spares

3.4.2 ICON-to-EMC Switching Interface

The ICON shall issue all commands to the Element Multiplexer Correlator (EMC) Switching Interface via the fiber optic switch Command Processor (CP). The ICON shall send formatted messages to the EMC Switching Interface to configure it with the required switch settings. Upon receipt of a configuration message, the EMC Switching Interface shall interpret the command, switch the fiber optic cables as instructed by the command, and issue a command to change the switch settings for the Common Data Broadcast (CDB) switch.

Table 3.4.2-1 provides a summary of the data messages initiated from the ICON to the EMC Switching Interface.

Table 3.4.2-1: ICON-to-EMC Switching Interface Message Summary

Msg. Type	Title	Function
0	EMC Switching Extended Status	To request that the EMC Switching Interface send an Extended Status Message
1	EMC Switching Command	To switch EMC inputs to specified IBUGs

3.4.2.1 ICON "EMC Switching Extended Status" Message

Table 3.4.2-2 provides the format for the ICON "EMC Switching Extended Status" command message.

Table 3.4.2-2: ICON "EMC Switching Extended Status" Command Message Format

Field Length Bytes	Bits Req.	Format /Type	Value/ Range	Bit Number/ Units	Description
4	3	ENUM	0	0-2	Message Type: 0 (Request Extended Status)
	29	BIN	N/A	3-31	Spares

3.4.2.2 ICON "EMC Switching Command" Message

Table 3.4.2-3 provides the format for the ICON "EMC Switching Command" message.

In the event that the EMC Interface cannot interpret the ICON command correctly, e.g., due to invalid message format, switching to unused port, or invalid command, the EMC Interface shall send an error message to the ICON in the format specified in Section 3.6.1.3 of this document.

Table 3.4.2-3: ICON "EMC Switching Command" Message Format

Field Length Bytes	Bits Req.	Format /Type	Value/ Range	Bit Number/ Units	Description
4	3	ENUM	1	0-2	Message Type: 1 (Change Switch)
	29	BIN	N/A	3-31	Spares
4	4	ENUM. TYPE	0-15	0-3	0 – EMC_1 1 – EMC_2 2 – EMC_3 3 – EMC_4 5-15 – Spares
	10	BIN	BIT-TO-IBUG	4-13	IBUG Connection Point (**Note**) 0 – IBUG_1 1 – IBUG_2 2 – IBUG_3 3 – IBUG_4 4 – IBUG_5 5 – IBUG_6 6 – IBUG_7 7 – IBUG_8 8 – IBUG_9 9 – IBUG_10
	18	BIN	N/A	14-31	Spares
Note - IBUG connections are 1-1 or 1-to-many. If more than one IBUG connection point is specified, the EMC Switching Interface shall connect each IBUG to the EMC specified. Note that this command does not specify that any existing connections be broken except those necessary to carry out the switching command being executed: existing IBUGs shall remain connected.					

3.4.3 ICON-to-Beamformer Interface

The ICON-to-Beamformer interface is described in the Interface Control Document for the Third-Generation TDRS MA Beamforming Subsystem, ITT Document Number 036-140773.

3.5 DCON DATA

The DCON shall control the interconnection assignment of the IF Switch and shall interface with up to eight DMGs. The DCON shall send status information to the DASCON and shall receive demodulation commands from the DASCON as well as commands and status requests from the DCON graphic user interface (GUI).

3.5.1 DCON-to-DASCON Interface

Table 3.5.1-1 provides a summary of the data messages initiated from the DCON to the DASCON.

Table 3.5.1-1: DCON-to-DASCON Message Summary

Msg. Type	Title	Function
0	DCON Status	To report the status of the demodulating function
1	DCON Extended Status	To report additional demodulating parameters to DASCON

3.5.1.1 "DCON Status" Message

Table 3.5.1-2 provides the format for the "DCON Status" message.

Table 3.5.1-2: "DCON Status" Message Format

Field Length Bytes	BitsReq.	Format/ Type	Value/ Range	Bit Num./ Units	Description
4	1	ENUM	0	0	Message Type: 0
	31	BIN	N/A	1-31	Spares
4	1	BIN	0 or 1	0	DCON Status (1 – Alert/0 – No Alert)
	1	BIN	0 or 1	1	IF Switch Status (1 – Alert/0 – No Alert)
	8	BIN	0 or 1		DMG Present (1 – Present/0 – Not Present)
				2	DMG 1
				3	DMG 2
				4	DMG 3
				5	DMG 4
				6	DMG 5
				7	DMG 6
				8	DMG 7
				9	DMG 8
	8	BIN			DMG Alert (1 – Alert/0 – No Alert)
				10	DMG 1
				11	DMG 2
				12	DMG 3
				13	DMG 4
				14	DMG 5
				15	DMG 6
				16	DMG 7
				17	DMG 8
	8	BIN	0 or 1		DMG Control Mode (1 – Local/0 – Remote)
				18	DMG 1
				19	DMG 2
				20	DMG 3
				21	DMG 4
				22	DMG 5
				23	DMG 6
				24	DMG 7
				25	DMG 8
	6	BIN	N/A	26-31	Spares

Table 3.5.1-2: "DCON Status" Message Format *(Cont'd)*

Field Length Bytes	BitsReq.	Format/ Type	Value/ Range	Bit Num./ Units	Description
4	1	BIN	0 or 1	0	IF Switch Interface Status (1 – Alert/0 – No Alert)
	8	BIN	0 or 1		DMG Interface Status (1 – Alert/0 – No Alert)
				1	DMG 1
				2	DMG 2
				3	DMG 3
				4	DMG 4
				5	DMG 5
				6	DMG 6
				7	DMG 7
				8	DMG 8
	23	BIN	N/A	9-31	Spares
4	16	BIN	0-2		DMG Operating Mode (0 – Online/1- Offline Local/2 – Offline System Bit)
				0-1	DMG 1
				2-3	DMG 2
				4-5	DMG 3
				6-7	DMG 4
				8-9	DMG 5
				10-11	DMG 6
				12-13	DMG 7
				14-15	DMG 8
	8	BIN	0 or 1		DMG Mode (1 – Any DMU in Trk Mode/ 0 – else)
				16	DMG 1
				17	DMG 2
				18	DMG 3
				19	DMG 4
				20	DMG 5
				21	DMG 6
				22	DMG 7
				23	DMG 8
	8	BIN	N/A	24-31	Spares

***Table 3.5.1-2: "DCON Status" Message Format** (Cont'd)*

Field Length Bytes	BitsReq.	Format/ Type	Value/ Range	Bit Num./ Units	Description
4	7	BIN	0 or 1		Rack Present (1 – Present/0 – Not Present)
				0	Rack 1
				1	Rack 2
				2	Rack 3
				3	Rack 4
				4	Rack 5
				5	Rack 6
				6	Rack 7
	7	BIN	0 or 1		Rack Temperature Alert (65 < Temp) (1 – Alert/0 – No Alert)
				7	Rack 1
				8	Rack 2
				9	Rack 3
				10	Rack 4
				11	Rack 5
				12	Rack 6
				13	Rack 7
	7	BIN	0 or 1		Rack Temperature Warning (55 < Temp) (1 – Warning/0 – No Warning)
				14	Rack 1
				15	Rack 2
				16	Rack 3
				17	Rack 4
				18	Rack 5
				19	Rack 6
				20	Rack 7
	11	BIN	N/A	21-31	Spares
4	8		-255 to 255	0-7	Rack 1 Temperature (Celsius)
	8		-255 to 255	8-15	Rack 2 Temperature (Celsius)
	8		-255 to 255	16-23	Rack 3 Temperature (Celsius)
	8		-255 to 255	24-31	Rack 4 Temperature (Celsius)
4	8		-255 to 255	0-7	Rack 5 Temperature (Celsius)
	8		-255 to 255	8-15	Rack 6 Temperature (Celsius)
	8		-255 to 255	16-23	Rack 7 Temperature (Celsius)
	8	BIN	N/A	24-31	Spares

3.5.1.2 "DCON Extended Status" Message

Table 3.5.1-3 provides the format for the "DCON Extended Status" message.

Table 3.5.1-3: "DCON Extended Status" Message Format

Field Length Bytes	BitsReq.	Format/ Type	Value/ Range	Bit Num./ Units	Description
4	3	ENUM	1	0-2	Message Type: 1 (Extended Status Report)
	29	BIN	N/A	3-31	Spares
4	4	ENUM	1-10	0-3	DMG Number
	28	BIN	N/A	4-31	Spares
4	8	BIN	0 or 1		DMU Present (1 – Present/0 – Not Present)
				0	DMU 1
				1	DMU 2
				2	DMU 3
				3	DMU 4
				4	DMU 5
				5	DMU 6
				6	DMU 7
				7	DMU 8
	8	BIN	0 or 1		DMU Alert (1 – Alert/0 – No Alert)
				0	DMU 1
				1	DMU 2
				2	DMU 3
				3	DMU 4
				4	DMU 5
				5	DMU 6
				6	DMU 7
				7	DMU 8
	16	ENUM TYPE	0-2		DMU Mode (0 - Unalloc/1 - Acq/ 2 - Trk)
				0-1	DMU 1
				2-3	DMU 2
				4-5	DMU 3
				6-7	DMU 4
				8-9	DMU 5
				10-11	DMU 6
				12-13	DMU 7
				14-15	DMU 8

3.5.2 DCON-to-IF Switch Interface

The IF Switch command set is described in the Universal Switching Corporation's Operating and Programming Manual for Model S6400C. The required ASCII command strings and ASCII status shall be communicated over a serial port. Table 3.5.2-1 provides a summary of the ASCII commands that the DCON shall be capable of sending to the IF Switch to establish configuration, connection, and status monitoring.

Table 3.5.2-1: DCON "IF Switch Control Message" Command Format

Name	Command Abbreviation	Format Type	Value/Range	Description
Connect	Ciiiooo	ASCII	I(1-64), o(1-64)	Connect a specified input to a specified output
Connect (extend)	Ciiiooommm	ASCII	I(1-640, o(1-64), m(1-64)	Connect a specified input to specified output through a specified mid-stage port
Disconnect	Diiiooo	ASCII	I(1-64), o(1-64)	Disconnect a specified input from a specified output
Verify	Viiiooo	ASCII	I(1-64), o(1-640	Verify the connection of an input/output combination
Verify (extend)	Viiiooommm	ASCII	I(1-64),o(1-64),m(1-64)	Verify the connection of an input/output combination through a specified mid-stage port
Clear	clear	ASCII		Clear all cross point connection
Store	STnnn	ASCII	N (0-9)	Store switching configuration
Recall	REnnn	ASCII	N (0-9)	Recall switching configuration
Dload	dload	Integer*2		Report all I/O cross point connections.
Mload	mload	Hex		Report all I/O cross point connections with the inclusion of mid-stage port
Reset	reset	ASCII		Reset the system for a self diagnostic test
Lock local	Lnnnn	ASCII	N (0-9)	Lock front panel control with a security code
Unlock local	unlok	ASCII		Unlock front panel
Status	stat	ASCII	Ennnn (n-0-9)	Return error accumulated in the error stack

3.5.3 DCON-to-DMG Interface

The DCON shall interface with one or more DMGs to:

1. Control the demodulation modes in each demodulator.
2. Monitor the health and status of the DMGs.
3. Monitor the DMG-administered control cycle.

The DCON shall configure each demodulator separately or all together by sending a configuration packet with "9" as the demodulator number. The configuration command shall not allocate or de-allocate a demodulator. The DCON shall have the capability to change the Raw Data Address and Port Number without taking the demodulator offline. If the demodulator is in the middle of transferring data, new address and port information shall take effect only after a signal loss event. If the DMG will be required to perform CCSDS encoding, the data type shall be specified in the "Configure DMU Message".

Table 3.5.3-1 provides a summary of the data messages initiated from the DCON to the DMGs.

Table 3.5.3-1: DCON-to-DMG Data Message Summary

Msg. Type	Title	Function
0	DMG Extended Status	To request that the DMG send an Extended Status Message
1	DMU Parameters Update	To command DMU parameters
2	Configure DMU Command	To command DMU state setting
3	Doppler Correction	To command DMU Doppler correction
4	Current Time	To provide current time

3.5.3.1 DCON "DMG Extended Status" Message

Table 3.5.3-2 provides the format for the DCON "DMG Extended Status" command message.

Table 3.5.3-2: DCON "DMG Extended Status" Command Message Format

Field Length Bytes	BitsReq.	Format/ Type	Value/ Range	Bit Num./ Units	Description
4	3	ENUM	0	0-2	Message Type: 0 (Request Extended Status)
	29	BIN	N/A	3-31	Spares

3.5.3.2 DCON "DMU Parameters Update" Message

Table 3.5.3-3 provides the format for the DCON "DMU Parameters Update" command message.

Table 3.5.3-3: DCON "DMU Parameters Update" Command Message Format

Field Length Bytes	BitsReq.	Format/ Type	Value/ Range	Bit Num./ Units	Description
4	3	ENUM	1	0-2	Message Type: 1 (DMU Parameters Update)
	29	BIN	N/A	3-31	Spares
4	32	ENUM	1-8,9	0-31	DMU Number 1-8, 9 for all
4	32	Long	5000-5063	0-31	Port Number
4	32	ENUM	1-85	0-31	Enumerated PN Code as per 451-PN Code-SNIP
4	32	Long	1000-150000	0-31	Bits per second
4	1	ENUM	0 or 1	0	Modulation SQPN (1 – true/0- false)
	1	BIN	0 or 1	1	G2 Inversion
	1	ENUM	0 or 1	2	Symbol Format 0 – NRZ 1 – Biphase
	2	ENUM	0-2	3-4	Data Format 0 – NRZ-L 1 – NRZ-S 2 – NRZ-M
	1	ENUM	0-1	5	Carrier Uncertainty 0 – 700 Hz 1 – 3000 Hz
	26	BIN	N/A	6-31	Spares
4	32	Long	-100000 - 100000	0-31	Carrier Offset (Hz)

3.5.3.3 DCON "Configure DMU Command" Message

Table 3.5.3-4 provides the format for the DCON "Configure DMU Command" message.

Table 3.5.3-4: DCON "Configure DMU Command" Message Format

Field Length Bytes	BitsReq.	Format/ Type	Value/ Range	Bit Num./ Units	Description
4	3	ENUM	2	0-2	Message Type: 2 (Set DMU State)
	29	BIN	N/A	3-31	Spares
4	4	ENUM	1-8,9	0-3	DMU Number 1-8, 9 for all
	2	ENUM	0-2	4-5	DMU State: (0 – Deallocate/1-Deallocate with BIST; 3-Allocate/ 4-Reacquire)
	26	BIN	N/A	6-31	Spares

3.5.3.4 DCON "Doppler Correction" Message

Table 3.5.3-5 provides the format for the DCON "Doppler Correction" command message.

Table 3.5.3-5: DCON "Doppler Correction" Command Message Format

Field Length Bytes	BitsReq.	Format/ Type	Value/ Range	Bit Num./ Units	Description
4	3	ENUM	3	0-2	Report Type:3 (Doppler Correction)
	29	BIN	N/A	3-31	Spares
24	N/A	CharPtr	N/A	N/A	Number of seconds since January 1, 1970
4	32	IEEE Float	N/A	0-31	DMU 1 Doppler Freq Estimate
4	32	IEEE Float	N/A	0-31	DMU 1 Doppler Freq Rate Estimate
4	32	IEEE Float	N/A	0-31	DMU 2 Doppler Freq Estimate
4	32	IEEE Float	N/A	0-31	DMU 2 Doppler Freq Rate Estimate
4	32	IEEE Float	N/A	0-31	DMU 3 Doppler Freq Estimate
4	32	IEEE Float	N/A	0-31	DMU 3 Doppler Freq Rate Estimate
4	32	IEEE Float	N/A	0-31	DMU 4 Doppler Freq Estimate
4	32	IEEE Float	N/A	0-31	DMU 4 Doppler Freq Rate Estimate
4	32	IEEE Float	N/A	0-31	DMU 5 Doppler Freq Estimate
4	32	IEEE Float	N/A	0-31	DMU 5 Doppler Freq Rate Estimate
4	32	IEEE Float	N/A	0-31	DMU 6 Doppler Freq Estimate
4	32	IEEE Float	N/A	0-31	DMU 6 Doppler Freq Rate Estimate
4	32	IEEE Float	N/A	0-31	DMU 7 Doppler Freq Estimate
4	32	IEEE Float	N/A	0-31	DMU 7 Doppler Freq Rate Estimate
4	32	IEEE Float	N/A	0-31	DMU 8 Doppler Freq Estimate
4	32	IEEE Float	N/A	0-31	DMU 8 Doppler Freq Rate Estimate

3.5.3.5 DCON "Current Time" Message

Table 3.5.3-6 provides the format for the DCON "Current Time" command message.

Table 3.5.3-6: DCON "Current Time" Command Message Format

Field Length Bytes	BitsReq.	Format/ Type	Value/ Range	Bit Num./ Units	Description
4	3	ENUM	4	0-2	4 (Current Time)
	29	BIN	N/A	3-31	Spares
4	32			0-31	Number of seconds since January 1, 1970

3.5.4 DCON/Temperature Monitor Interface

Remote operation of the Lake Shore Model 218 Temperature Monitor is described in Chapter 6 of the User's Manual. This section describes how the Lake Shore device will interoperate with the DCON over the RS-232 interface. The DCON will send ASCII command message strings to the Lake Shore Device and will receive response message strings from the device. The DCON will periodically receive temperature readings from all sensors connected to the Lake Shore Temperature Monitor and will report temperature information to the DASCON as directed (see Section 3.5.1.1 above).

3.5.4.1 Serial Interface

The Model 218 has a 9-pin D-Subminiature plug on the rear panel that will be matched to a socket on the cable to the DCON. Asynchronous timing will be used for individual bit data within a character. This timing requires start and stop bits as part of each character to resynchronize the transmitter and receiver between each character. The Model 218 uses half-duplex transmission and will support remotely-selectable baud rates of 300, 1200, or 9600. Table 3.5.4-1 provides the specifications of the serial interface

Table 3.5.4-1: Serial Interface Characteristics

Parameter	Specified Characteristic
Connector type	DE-9 D-Style Connector
Connector wiring	DTE
Voltage levels	EIA RS-232C
Transmission distance	Maximum of 50 feet
Transmission mode	Half duplex
Timing format	Asynchronous
Baud rate	300, 1200, or 9600
Handshake	Software timing
Character bits	1 start, 7 data, 1 parity, 1 stop
Parity	Odd
Terminators	CR(0DH) LF(0AH)
Command rate	20 commands per second maximum

3.5.4.2 Command and Response Messages

Table 3.5.4-2 provides the message format for DCON commands to, and responses from, the Lake Shore Model 218 Temperature Monitor as specified in Chapter 6.3 of the User's Manual.

Table 3.5.4-2: DCON Temperature Monitor Command and Response Message Formats

Name	Command String	Parameter Values	Response	Description
Clear	*CLS		None	Clear serial interface; clears registers and terminates pending operations.
Self Test	*TST?		0/1	Query power-up self test result; 0=no errors, 1=errors.
Reset Alarms	ALMRST		None.	Clear latched alarm status when alarm condition cleared.
Set Alarm	ALARM n,st,u,ht,lt,d,le	n = 1 – 8 (input #) st = 0 (off), 1 (on) u = 1 (K), 2 (C) (units) ht = xxx.x (high temp) lt = xxx.x (low temp) d = xx.x (deadband) le = 0, 1 (latch enable)		Configure input alarm parameters. Alarm set if below lt or above ht; if le = 0, alarm resets for lt + d < temp < ht – d.
Query	ALARM? n	n = 1 – 8 (input #)	n,st,u,ht,lt,d,le	Query Alarm configuration

Alarm				for input n.

Table 3.5.4-2: DCON Temperature Monitor Command and Response Message Formats *(Cont'd)*

Name	Command String	Parameter Values	Response	Description
Query Alarm Status	ALARMST? n	n = 1 – 8 (input #)	0 (off), 1 (active)	Query current alarm status for input n.
Set Date	DATETIME mm,dd,yy,hh,mm,ss	mm = 1 – 12, dd = 1 – 31, yy = 00 – 99, hh = 0 – 23, mm = 0 – 60, ss = 0 - 60	None.	Sets current date and time.
Query Date	DATETIME?		mm,dd,yy,hh,mm,ss	Query current date and time.
Lock	LOCK st, nnn	st = 0 (off), 1 (on) nnn = 000 – 999		Lock front panel control with a security code
Query Lock Status	LOCK?		0/1, nnn	Query front panel lock status and code.
Set Interface mode	MODE st	st = 0 (local), 1 (remote), 2 (remote with lockout)		Configure remote interface mode.
Query interface mode	MODE?		0 - 2	Query remote interface mode.

3.6 EMC SWITCHING INTERFACE DATA

This section describes the interface between the EMC Switching element of the DAS and the ICON. Upstream from the EMC Switching Subsystem and external to DAS, the EMC is connected to legacy components. These interfaces are described in Section 4.2 of the DAS/WSC ICD.

3.6.1 EMC Interface-to-ICON

Table 3.6.1-1 provides a summary of the data messages initiated from the EMC Switching Subsystem to the ICON.

Table 3.6.1-1: EMC Interface to-ICON Message Summary

Msg. Type	Title	Function
0	EMC Interface Status	To report the status of the EMC Switching Interface
1	EMC Interface Extended Status	To report additional parameters
2	EMC Interface Error	To report that a command cannot be executed

The EMC Interface shall not respond directly to a "Change Switch" command from the ICON except in the event of a command message error. The EMC Interface shall, however, report switch changes by updating status messages to reflect the new switch status once the switching change has been fully implemented.

3.6.1.1 "EMC Interface Status" Message

The "EMC Interface Status" message shall be sent from the EMC Interface to the ICON at one-second intervals to report the current state of the EMC Interface. Table 3.6.1-2 provides the format for the "EMC Interface Status" message.

Table 3.6.1-2: "EMC Interface Status" Message Format

Field Length Bytes	Bits Req.	Format /Type	Value/ Range	Bit Number/ Units	Description
4	3	ENUM	0	0-2	Message Type: 0 (Status Report)
	29	BIN	N/A	3-31	Spares
4	2	BIN	0-3	0-1	0 – All systems Go 1 – FO Switch Status Fault 2 – CDB Switch Status Fault 3 – Both FO and CDB Faulted
	8	BIN	0-255	2-9	Numeric Value representing temperature in degrees C (note: 0 degrees minimum)
	2	ENUM	BIT-TO-IBUG	10-11	IBUG 1 Connection Point 0 – EMC_1 1 – EMC_2 2 – EMC_3 3 – EMC_4
	2	ENUM	BIT-TO-IBUG	12-13	IBUG 2 Connection Point 0 – EMC_1 1 – EMC_2 2 – EMC_3 3 – EMC_4
	2	ENUM	BIT-TO-IBUG	14-15	IBUG 3 Connection Point 0 – EMC_1 1 – EMC_2 2 – EMC_3 3 – EMC_4
	2	ENUM	BIT-TO-IBUG	16-17	IBUG 4 Connection Point 0 – EMC_1 1 – EMC_2 2 – EMC_3 3 – EMC_4
	2	ENUM	BIT-TO-IBUG	18-19	IBUG 5 Connection Point 0 – EMC_1 1 – EMC_2 2 – EMC_3 3 – EMC_4

Table 3.6.1-2: "EMC Interface Status" Message Format *(Cont'd)*

Field Length Bytes	Bits Req.	Format /Type	Value/ Range	Bit Number/ Units	Description
	2	ENUM	BIT-TO-IBUG	14-15	IBUG 3 Connection Point 0 – EMC_1 1 – EMC_2 2 – EMC_3 3 – EMC_4
	2	ENUM	BIT-TO-IBUG	16-17	IBUG 4 Connection Point 0 – EMC_1 1 – EMC_2 2 – EMC_3 3 – EMC_4
	2	ENUM	BIT-TO-IBUG	18-19	IBUG 5 Connection Point 0 – EMC_1 1 – EMC_2 2 – EMC_3 3 – EMC_4
	2	ENUM	BIT-TO-IBUG	20-21	IBUG 6 Connection Point 0 – EMC_1 1 – EMC_2 2 – EMC_3 3 – EMC_4
	2	ENUM	BIT-TO-IBUG	22-23	IBUG 7 Connection Point 0 – EMC_1 1 – EMC_2 2 – EMC_3 3 – EMC_4
	2	ENUM	BIT-TO-IBUG	24-25	IBUG 8 Connection Point 0 – EMC_1 1 – EMC_2 2 – EMC_3 3 – EMC_4
	2	ENUM	BIT-TO-IBUG	26-27	IBUG 9 Connection Point 0 – EMC_1 1 – EMC_2 2 – EMC_3 3 – EMC_4
	2	ENUM	BIT-TO-IBUG	28-29	IBUG 10 Connection Point 0 – EMC_1 1 – EMC_2 2 – EMC_3 3 – EMC_4
	2	N/A	N/A	30-31	Spares

3.6.1.2 "EMC Interface Extended Status" Message

The "EMC Interface Extended Status" message shall provide a detailed status report of EMC interface components to support troubleshooting or to assist the operator in determining the configuration of various devices. The "EMC Interface Extended Status" message shall be sent from the EMC Interface to the ICON on power up and in response to the ICON's "Request EMC Interface Extended Status"

command (see Section 3.4.2.1). Table 3.6.1-3 provides the format for the "EMC Interface Extended Status" message.

Table 3.6.1-3: "EMC Interface Extended Status" Message Format

Field Length Bytes	Bits Req.	Format /Type	Value/ Range	Bit Number/ Units	Description
4	3	ENUM	1	0-2	Message Type: 1 (Extended Status Report)
	29	BIN	N/A	3-31	Spares
4	32	2nd Word of Status Message Response	N/A	0-31	0 – All systems Go 1 – FO Switch Status Fault 2 – CDB Switch Status Fault 3 – Both FO and CDB Faulted
4	32	ENUM	N/A	0-31	NTS Signal Port Connected ? 0 – NTS Port 1A is connected (bit 0 = 1) or not connected (bit 0 = 0) 1 – NTS Port 1B … 2 – NTS Port 1C … 3 – NTS Port 1D … 4 – NTS Port 2A … etc.
4	32	ENUM	N/A	0-31	NTS Signal Detected? 0 – NTS Port 1A Signal Detected (bit 0 = 1) or not connected (bit 0 = 0) 1 – NTS Port 1B … 2 – NTS Port 1C … 3 – NTS Port 1D … 4 – NTS Port 2A … etc.
4	32	ENUM	N/A	0-31	NTS # 2 Signal Port Connected? 0 – NTS Port 1A is connected (bit 0 = 1) or not connected (bit 0 = 0) 1 – NTS Port 1B … 2 – NTS Port 1C … 3 – NTS Port 1D … 4 – NTS Port 2A … etc.
4	32	ENUM	N/A	0-31	NTS # 2 Signal Detected? 0 – NTS Port 1A Signal Detected (bit 0 = 1) or not connected (bit 0 = 0) 1 – NTS Port 1B … 2 – NTS Port 1C … 3 – NTS Port 1D … 4 – NTS Port 2A … etc.

Table 3.6.1-3: "EMC Interface Extended Status" Message Format *(Cont'd)*

Field Length Bytes	Bits Req.	Format /Type	Value/ Range	Bit Number/ Units	Description
4	2	BIN	0 – Go 1 – No Go	0-1	FO Switch Status 0 – NTS # 1 Communications 1 – NTS # 2 Communications
	4	BIN	0 – Go 1 – No Go	2-5	Keypad/Display Status 0 – Keypad/Display Communications 1-3 – Spares
	8	BIN	0 – Go 1 – No Go	6-13	I/O PMC Status 0 – Temp. Sensor Operational 1 – Temp. Sensor overtemp. Condition (0 = working) 2 – I/O Port Communications 3-7 – Spares
	8	BIN	0 – Go 1 – No Go	14-21	MCP750 Status 0 – Communications 1 – COM1 port 2 – COM2 port 3 – Power 4 – 7 Spares
	10	BIN	N/A	22-31	Spares
4	4	BIN	0 – Go 1 – No Go	0-3	CDB Switch Console Status 0 – Communications 1 – Self-Test 2-3 – Spare
	24	BIN	0 – Enabled 1 – Disabled or Suspended	2-5	Port Status 0 – Port 1 1 – Port 2 2 – Port 3 . . . 23 – Port 24
	4	BIN	N/A	N/A	Spares

3.6.1.3 "EMC Interface Error" Message

The EMC Interface shall send an "EMC Interface Error" message to the ICON whenever the EMC Interface is unable to process the command presented. Table 3.6.1-4 specifies both the conditions that shall cause the initiation of an error message and the message format.

Table 3.6.1-4: "EMC Interface Error" Message Format

Field Length Bytes	Bits Req.	Format /Type	Value/ Range	Bit Number/ Units	Description
4	3	ENUM	2	0-2	Message Type: 2 (Error)
	29	BIN	N/A	3-31	Spares
4	3	ENUM	0 – Go 1 – No Go	0-2	0 – Unrecognized Command 1 – Invalid Command Format (e.g., improper # characters, wrong terminator) 2 – Switching to invalid port 3-31 – Spares
	29	BIN	N/A	3-31	Spares

3.7 BEAMFORMER DATA

IBUGs shall be connected to the IF Switch by a coaxial cable. Each of the eight input slots shall have eight input ports. A Beamformer Group (IBUG) shall be capable of providing up to six inputs. Therefore, IBUGs 1-6 shall connect IBUs to the top six input ports on the first six input slots. IBUGs 7 and 8 shall connect to the six spare input ports across three cards and IBUGs 9 and 10 shall connect to the top six input ports of the 7th and 8th input card. The BNC's connection to an input slot from an IBUG shall correspond identically to the IBUG group number. The IBU number in the IBUG shall match the input port in the DCON GUI IF Switch Control Window. By default, the input port number shall be assigned to the same IBU number.

Each IBUG is connected to the ICON to send and receive status and command information, and to the IF Switch for the analog data output. The formats of these interfaces are presented in the following sections.

3.7.1 Beamformer-to-ICON

Section 7 of the Interface Control Document for the Third-Generation TDRSS MA Beamforming Subsystem specifies the messages to be sent from the beamformers to ICON. The following table provides a summary of the specified messages.

Table 3.7.1-1: Beamformer to-ICON Message Summary

Msg. Type	Title	Function
0	IBUG Report (TGBFS ICD Section 7.3.10)	To report the status of an IBUG
1	IBUG Extended Report (TGBFS ICD Section 7.3.11)	To report additional IBUG parameters
2	IBU Weights Report (TGBFS ICD Section 7.3.15)	To report the current beamforming weights being used

3.7.2 Beamformer-to-IF Switch

Section 8 of the Interface Control Document for the Third-Generation TDRSS MA Beamforming Subsystem specifies the interface between the beamformers and the IF Switch.

3.8 IF SWITCH DATA

The S6400A-01 IF Switch from Universal Switching Corporation (see Figure 3-2) is a high performance routing system with up to 64 inputs and 64 outputs. The IF Switch provides a flexible switching system between the DAS IBUGs and the DAS DMGs and is controlled by the DCON through an RS-232 connection.

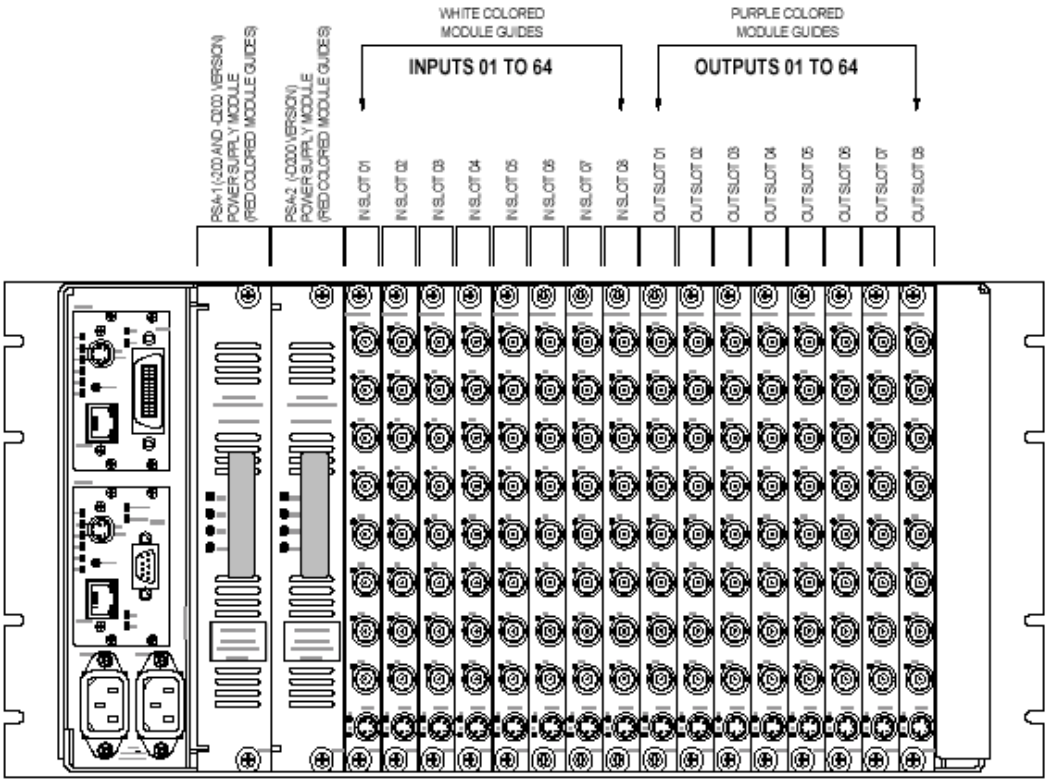

Figure 3-2: Universal Switching Corporation IF Switch S6400A-01 Schematic

To perform a “Hot Swap”, whenever an input or an output card fails the operator shall place the IF switch into “Maintenance Mode”. In this mode, the input or output card can be removed and replaced while the other cards in the chassis continue to operate normally. The only limitation is that IF switching shall not take place while the IF Switch is in the “Maintenance Mode”. Once the new card is in place, the IF switch shall be taken out of “Maintenance Mode” and, after 3-5 seconds, shall return to its original switched configuration. At this point, the DCON shall reconfigure all IF switch cards as necessary to ensure that the desired switch configuration is in place.

3.8.1 IF Switch-to-DCON

Table 3.8.1-1 provides the error codes that the IF Switch shall store in its error stack. If no error is detected, the IF Switch shall place an E0000 code in the error stack. The error code shall be presented in the form of Ennnn, where "n" is an integer from 0 to 9. The error code shall be worked on a first-in first-out (FIFO) basis. Upon receipt of a status command ("stat") from the DCON, the IF Switch shall respond with the most recent error code.

Table 3.8.1-1: IF Switch Error Code Definitions

Error Number	RS-232C	RJ-45	Description
E0100	Yes	No	Specified output does not exist
E0200	Yes	No	Specified input does not exist
E0300	Yes	Yes	Unrecognized command
E0400	Yes	No	Specified output is already used
E0800	Yes	No	Specified memory location is empty
E0900	Yes	No	Non-numeric argument
E10nn	Yes	No	Low power supply voltage
E1200	Yes	No	Ram check sum error
E1300	Yes	No	EPROM checksum error
E1500	Yes	No	General power supply failure
E1600	Yes	Yes	Incorrect UNLOCK code entered
E1700	Yes	No	RS232: break error
E1800	Yes	No	RS232: Framing error
E1900	Yes	No	RS232: Parity error
E2000	Yes	No	Rs232: Overrun error
E2100	Yes	No	Command length error
E2200	Yes	No	Mid-stage unavailable for routing
E2300	Yes	No	Bad key pad entry
E2600	Yes	No	Empty slot addressed
E2900	No	Yes	No remote keypad available
E3000	Yes	No	Remote module not ready when polled
E3100	Yes	No	Command format not supported
E3600	Yes	No	Unknown baud rate
E3700	No	Yes	Remote address response wrong
E3800	No	Yes	EOM missing in response from US-LINK device
E5000			SPI bus time out
E5200			SPI bus address mismatch
E5300			SPI bus checksum
E5400			SPI bus data field length
E5500			SPI bus response type

3.8.2 IF Switch-to-DMG

The messages from the IF Switch to the DMG are the same as the messages specified for the Beamformer-to-IF Switch in Section 3.7.2 above.

3.9 DEMOD GROUP (DMG) DATA

3.9.1 DMG-to-DCON

Table 3.9.1-1 provides a summary of the data messages initiated from the ICON to the DASCON.

Table 3.9.1-1: DMG-to-DCON Data Message Summary

Msg. Type	Title	Function
0	DMG Status	To report the status of the demodulating function
1	DMG Extended Status	To report additional demodulator parameters to DASCON

3.9.1.1 "DMG Status" Message

The "DMG Status" message shall be sent from the DMGs to the DCON at one-second intervals to report the current state of the DMGs. Table 3.9.1-2 provides the format for the "DMG Status" message.

The DMG shall check differences of entire 16 bits of mode to determine the IF Switch state.

Table 3.9.1-2: "DMG Status" Message Format

Field Length Bytes	BitsReq.	Format/ Type	Value/ Range	Bit Num./ Units	Description
4	3	ENUM	1	0-2	Message Type: 0 (Status Report)
	29	BIN	N/A	3-31	Spares
4	32	ENUM		0-31	DSER IP Address
4	2	ENUM		0-1	DMG Mode 0 – Offline 1 – Online 2 – BIT
	3	BIN	N/A	 2 3 4	DMG Alert (1 – Alert, 0 – No Alert Fan Warning Power Supply Voltage Warning Control processor (CP)
	27	BIN		5-31	Spares

Table 3.9.1-2: "DMG Status" Message Format *(Cont'd)*

Field Length Bytes	BitsReq.	Format/ Type	Value/ Range	Bit Num./ Units	Description
4	8	BIN	0 or 1	0-7	DMU Present (1 – Present/0 – Not Present DMU 1 DMU 2 DMU 3 DMU 4 DMU 5 DMU 6 DMU 7 DMU 8
	8	BIN	0 or 1	8-15	DMU Alert (1 – Alert/0 – No Alert) DMU 1 DMU 2 DMU 3 DMU 4 DMU 5 DMU 6 DMU 7 DMU 8
	16	BIN	N/A	16-31	Spares
4	16	BIN			DPM Mode (0 – Deallocated/1 – Searching, 2 – Locked)
				0-1	DMU 1
				2-3	DMU 2
				4-5	DMU 3
				6-7	DMU 4
				8-9	DMU 5
				10-11	DMU 6
				12-13	DMU 7
				14-15	DMU 8
	16	BIN	N/A	16-31	Spares

3.9.1.2 "DMG Extended Status" Message

Table 3.9.1-3 provides the format for the "DMG Extended Status" message.

Table 3.9.1-3: "DMG Extended Status" Message Format

Field Length Bytes	BitsReq.	Format/ Type	Value/ Range	Bit Num./ Units	Description
4	3	ENUM	1	0-2	Message Type: 1 (Extended Status Report)
	29	BIN	N/A	3-31	Spares
4	4	ENUM	1-8	0-3	DMU Number
	28	BIN	N/A	4-31	Spares
4	9	BIN		0-8	Status (1 – Alert/0 – No Alert) 0 – DPM Temperature 1 – ACM Temperature 2 – 3.3 V Measurement 3 – 5 V Measurement 4 – 12 V Measurement 5 - -12V Measurement 6 – Freq Ref 7 – IF Present 8 – PPS Present
	23	BIN	N/A	9-31	Spares
4	32	Integer		0-31	Acquisition Time (sec) Number of seconds since 1/1/70
4	32	Integer		0-31	Loss of lock time (sec) Number of seconds since 1/1/70
4	32	IEEE Float		0-31	Eb/No
4	32	IEEE Float		0-31	Symbol Estimate (sym/sec)
4	32	IEEE Float		0-31	Chip Rate Estimate (chips/sec)
4	32	IEEE Float		0-31	Carrier Freq Estimate (Hz)

3.9.2 DMG-to-DSER

Each DMU shall be assigned a static port number based on its DMG/DMU number. As the DMU demodulates, the DMG shall transfer the data from the DMU and send it to the DSER using TCP/IP and the assigned port number.

3.10 DATA FORMAT/ARCHIVE SERVER (DSER) DATA

The DAS data formatting and archive server function will be performed by use of commercial off-the-shelf (COTS) equipment: the AVTEC Systems Programmable Telemetry Processor (PTP), a PC-based, multi-channel telemetry and command processing system. In DAS, the PTP will provide one-way, receive-only processing and archiving of Customer data and will route real-time data (packet or frame relay) to the local network or designated data to the NASA Integrated Services Network (NISN) via a firewall security processor.

The PTP will send responses to the DASCON commands as outlined in Section 3.3.3 of this document and as defined in the AVTEC PTP Programmer's Guide.

ACRONYMS

C	degrees Celsius
CDB	common data broadcast
CDRL	Contract Data Requirements List
CP	command processor
DAS	Demand Access System
DASCON	DAS Controller Subsystem
DCON	Demodulator Controller Subsystem
DMG	Demodulator Group
DMU	Demodulator Unit
DSER	Data Format/Archive Server
EMC	Element Multiplexer Correlator
FCRX	fiber channel receiver
FO	fiber optic
FWM	fixed weight mode
GMT	Greenwich Mean Time
GSFC	Goddard Space Flight Center
IBU	Independent Beamformer Units
IBUG	IBU Group
ICD	Interface Control Document
ICON	IBUG Controller Subsystem
ID	identification
IF	interface
lat	latitude
long	longitude
MA	Multiple Access
MAR	Multiple Access Return
MP	Mechanical and Power Subsystem
NASA	National Aeronautics and Space Administration
NRZ-L, M, S	Non Return to Zero-L, M, S
PTP	Programmable Telemetry Processor
STDN	Space Flight Tracking and Data Network

SWSI	Space Network Web Services Interface
TBD/TBR	To Be Determined/To Be Reviewed
TDRS	Tracking and Data Relay Satellite
TDRSS	Tracking and Data Relay Satellite System
TGBFS	Third Generation Beamforming System
WSC	White Sands Complex