530-RSD-WSC

MISSION OPERATIONS AND DATA SYSTEMS DIRECTORATE

Requirements Specification for the White Sands Complex (WSC)

Revision 1

1 June 1997

National Aeronautics and Space Administration

Goddard Space Flight Center
Greenbelt, Maryland

Requirements Specification for the

White Sands Complex (WSC)

Revision 1

1 June 1997

Approved By:

Dave Littmann Date
WSC Project Office Systems Engineer

WSC Project Office Approval:

Denver W. Herr Date
WSC Project Office Manager
Code 530.4

Division CCB Approval:

Philip E. Liebrecht, Chief Date
Networks Division,
Code 530

Goddard Space Flight Center
Greenbelt, Maryland

Change Information Page

List of Effective Pages	
Page Number	**Issue**
Title	Revision 1
iii through xxiii/xxiv (blank)	Revision 1
1-1 through 1-6	Revision 1
2-1 through 2-6	Revision 1
3-1 through 3-13/3-14	Revision 1
4-1 through 4-10	Revision 1
5-1 through 5-239/5-240	Revision 1
6-1 through 6-19/6-20	Revision 1
7-1 through 7-16	Revision 1
8-1 through 8-53/8-54	Revision 1
9-1 through 9-10	Revision 1
10-1 through 10-4	Revision 1
11-1 through 11-4	Revision 1
12-1 through 12-2	Revision 1
13-1 through 13-4	Revision 1
14-1 through 14-2	Revision 1
15-1/15-2	Revision 1
16-1/16-2	Revision 1
17-1 through 17-3/17-4	Revision 1
18-1 through 18-2	Revision 1
19-1 through 19-2	Revision 1
20-1 through 20-4	Revision 1
Appendix A	Revision 1

Change Information Page

List of Effective Pages	
Page Number	**Issue**
Appendix B	Revision 1
Appendix C	Revision 1
AB-1 through AB-11/AB-12	Revision 1

Document History			
Document Number	**Status/Issue**	**Publication Date**	**CCR Number**
530-RSD-WSC	Original	1 September 1996	
530-RSD-WSC	Revision 1	1 June 1997	530/1005 530/1006 530/1007 530/1013

DCN Control Sheet

DCN Number	Date/Time Group	Month/ Year	Section(s) Affected	Initials

Contents

Contents

Section 1. Scope

1.1 Overview..... 1-1

1.2 Objective..... 1-1

1.3 Requirements..... 1-3

1.4 Specification Organization 1-4

1.5 Definitions..... 1-4

Section 2. Applicable and Reference Documents

2.1 Applicable Documents..... 2-1

2.1.1 NASA Documents..... 2-1
2.1.2 Military Specifications, Standards, and Handbooks..... 2-4
2.1.3 Contractor Documents..... 2-4
2.1.4 Other Government Documents 2-5
2.1.5 International Standards 2-5
2.1.6 Industrial Standards..... 2-5

2.2 Reference Documents..... 2-6

Section 3. Overview Of TDRSS Customer Service via the WSC

3.1 General..... 3-1

3.2 Telecommunications Services 3-1

3.2.1 General..... 3-1
3.2.2 Forward Services..... 3-1
3.2.3 Return Services..... 3-4
3.2.4 Shuttle-Unique Service..... 3-9
3.2.5 Tracking Services 3-11

3.3 Service Operations 3-11

3.4 TDRSS WSC Frequency Plan 3-12

Section 4. WSC Requirements

4.1 Overview and Architecture 4-1

4.2 Functional Requirements 4-4

4.2.1 SGLT Functional Requirements 4-4
4.2.2 S-band TDRS TT&C System (STTCS) Functional Requirements 4-5
4.2.3 Data Interface System (DIS) Functional Requirements 4-5
4.2.4 TOCC Functional Requirements 4-5
4.2.5 Common Time and Frequency System (CTFS) Functional Requirements 4-5
4.2.6 End-to-End Test Functional Requirements 4-6
4.2.7 Software Maintenance and Training Facility (SMTF) Functional Requirements 4-6
4.2.8 Maintenance Test Group (MTG) Functional Requirements 4-6
4.2.9 Hardware Maintenance Requirements 4-6

4.3 Performance Requirements 4-7

4.3.1 TDRS Support Performance 4-7
4.3.2 Operational Availability 4-7
4.3.3 RF Performance 4-7
4.3.4 SGLT Service Performance Requirements 4-8
4.3.5 TDRS S-band TT&C Performance Requirements 4-8
4.3.6 DIS Performance Requirements 4-8
4.3.7 TOCC Performance Requirements 4-8
4.3.8 CTFS Performance Requirements 4-8
4.3.9 End-to-End Test Performance Requirements 4-9
4.3.10 Maintenance Performance Requirements 4-9

4.4 Interface Requirements 4-9

4.4.1 WSC-TDRS Interface Requirements 4-9
4.4.2 WSC-Common Carrier Interface Requirements 4-9
4.4.3 Danzante-Cacique Interface Requirements 4-9
4.4.4 Cacique-GRGT Interface Requirements 4-10

4.5 Operations 4-10

4.5.1 Operations Requirements 4-10
4.5.2 Modes of Operation 4-10
4.5.3 Operational Support 4-11
4.5.4 Security Aspects of Operations 4-12

Section 5. SGLT Requirements

5.1 SGLT Requirements 5-1

5.1.1 Overview and Architecture 5-1
5.1.2 SGLT Functional Requirements 5-3
5.1.3 SGLT Performance Requirements 5-7

5.1.4 Interface Requirements 5-8
5.1.5 SGLT Operations 5-9

5.2 Antenna Subsystem (AS) 5-11

5.2.1 Overview and Architecture 5-11
5.2.2 Functional Requirements 5-14
5.2.3 Performance Requirements 5-16
5.2.4 Interface Requirements 5-28
5.2.5 Operational Requirements 5-29

5.3 User Service Subsystem (USS) 5-30

5.3.1 Forward Services 5-30
5.3.2 Return Services 5-64
5.3.3 Tracking Services 5-139

5.4 TT&C Subsystem (TTCS) 5-149

5.4.1 Overview and Architecture 5-149
5.4.2 Functional Requirements 5-153
5.4.3 Performance Requirements 5-155
5.4.4 Interfaces 5-174
5.4.5 Operations Requirements 5-177

5.5 Performance Measuring and Monitoring Subsystem (PMMS) 5-177

5.5.1 Overview and Architecture 5-177
5.5.2 Functional Requirements 5-178
5.5.3 Performance Requirements 5-183
5.5.4 Interface Requirements 5-183
5.5.5 Operations Requirements 5-184

5.6 Control and Display Computer Network (CDCN) 5-184

5.6.1 Overview and Architecture 5-184
5.6.2 Executive ADPE 5-192
5.6.3 User Service Subsystem (USS) ADPE Subsystem Requirements 5-200
5.6.4 TT&C ADPE Subsystem 5-213
5.6.5 PMM ADPE Subsystem 5-237

5.7 End-to-End Test Capability 5-243

5.7.1 End-to-End Test Overview and Architecture 5-243
5.7.2 Functional Requirements 5-245
5.7.3 Performance Requirements 5-245
5.7.4 Interfaces 5-246
5.7.5 Operations Requirements 5-246

Section 6. S-band TT&C System (STTCS)

6.1 Overview and Architecture 6-1

6.1.1 General 6-1
6.1.2 Compatibility Requirements 6-1

6.1.3 Requirements Overview 6-2
6.1.4 Architecture 6-2
6.2 S-band TT&C Antenna Subsystem 6-7
6.2.1 Functional Requirements 6-7
6.2.2 Performance Requirements 6-8
6.2.3 Interfaces 6-13
6.2.4 Operations Requirements 6-13
6.3 S-band TT&C Ground Equipment (STGE) 6-13
6.3.1 Functional Requirements 6-13
6.3.2 Performance Requirements 6-13
6.3.3 Interfaces 6-16
6.3.4 Operations Requirements 6-17
6.4 S-band TT&C ADPE Subsystem 6-17
6.4.1 Functional Requirements 6-17
6.4.2 Interface Requirements 6-19
6.4.3 Margin Requirements 6-19

Section 7. Common Time and Frequency System (CTFS)

7.1 Overview and Architecture 7-1
7.1.1 Architecture 7-1
7.2 Functional Requirements 7-3
7.2.1 Precision Frequency Source (PFS) 7-3
7.2.2 Timing Signal Generation (TSG) Subsystem 7-4
7.2.3 Signal Distribution Subsystem 7-5
7.2.4 Measuring and Monitoring Subsystem 7-6
7.3 Performance Requirements 7-7
7.3.1 Precision Frequency Source Requirements 7-7
7.3.2 Timing Signal Generation Requirements 7-10
7.3.3 Signal Distribution Subsystem 7-11
7.3.4 Measuring and Monitoring Subsystem 7-13
7.3.5 Standby Power Supply Performance 7-16
7.4 Interface Requirements 7-16
7.4.1 CTFS Systems/Subsystems Interfaces 7-16
7.4.2 CTFS-DIS ADPE Subsystem Interface 7-16
7.5 Operations Requirements 7-17

Section 8. Data Interface System (DIS)

8.1 DIS Overview and Architecture 8-1

8.1.1 Ground Terminal Interfaces..... 8-2
8.1.2 External Interfaces 8-2
8.1.3 DIS ADPE Subsystem..... 8-2
8.1.4 Secure Voice/Data Processing..... 8-6
8.1.5 Black Data Processing..... 8-8
8.1.6 Data Link Monitoring (DLM) 8-14
8.1.7 DIS Modular Expandability.....8-14
8.1.8 GDIS (Cacique and GRGT only) 8-14

8.2 DIS Functional Requirements.....8-14

8.2.1 DIS Equipment Setup, Control and Monitoring.....8-15
8.2.2 Block Encoding/Decoding 8-16
8.2.3 Local Area Network (LAN) Connections.....8-16
8.2.4 Secure Voice/Data Multiplexing and Demultiplexing 8-17
8.2.5 Bulk Encryption/Decryption.....8-17
8.2.6 Black Data Port Selection.....8-18
8.2.7 Communications Switching.....8-23
8.2.8 Shuttle Unique Functions 8-26
8.2.9 Shuttle Return Data Processing.....8-31
8.2.10 High Data Rate Multiplexing/Demultiplexing 8-34
8.2.11 High Data Rate Recording/Playback 8-35
8.2.12 Data Link Monitoring.....8-36
8.2.13 Transmission Protocol.....8-36
8.2.14 DIS Self-Testing.....8-36
8.2.15 CTFS Monitoring.....8-36
8.2.16 Data Splitter/Selector 8-36
8.2.17 GDIS 8-36

8.3 Performance Requirements.....8-44

8.3.1 Operational Message Response Time 8-44
8.3.2 Throughput.....8-44
8.3.3 Capacity 8-45
8.3.4 Data Quality.....8-45
8.3.5 Shuttle Return Data Processing.....8-45
8.3.6 Secure Multiplexer/Demultiplexer Equipment.....8-53

8.4 Interfaces.....8-53

8.4.1 Red Voice/Data Interfaces 8-53
8.4.2 Black Data Interfaces 8-54
8.4.3 External Interfaces 8-54
8.4.4 CTFS Interfaces 8-58

8.5 Operations Requirements.....8-58

8.5.1 Failure Tolerance.....8-58
8.5.2 Operator Interfaces.....8-58
8.5.3 Schedule Data Organization 8-58
8.5.4 DIS Initialization, Termination, Restart, and Reset.....8-59
8.5.5 Modes of Operation.....8-59

8.5.6 Monitoring Functions 8-60
8.5.7 Control Functions 8-61
8.5.8 Logging and Archiving 8-61
8.5.9 DIS ADPE Subsystem Delogging 8-62
8.5.10 Provide Local Control Mode Support 8-63

Section 9. TDRSS Operations Control Center (TOCC)

9.1 TOCC Overview and Architecture 9-1
9.1.1 Overview 9-1
9.1.2 Physical Layout 9-3
9.2 Functional Requirements 9-3
9.2.1 ADPE Access Control 9-3
9.2.2 Common Workstation Functions 9-3
9.2.3 Workstation Displays 9-4
9.2.4 Operator Dialogue 9-6
9.2.5 GMT Display 9-6
9.2.6 Printouts 9-6
9.2.7 Flexibility in the TOCC Equipment and Procedures 9-6
9.2.8 Status Monitoring 9-6
9.3 Performance Requirements 9-6
9.4 Interface Requirements 9-7
9.5 Operations Requirements 9-7
9.5.1 State Vector Review 9-7
9.5.2 Spacecraft/Mission Information 9-9
9.5.3 Fault Indication 9-9
9.5.4 Delogging 9-9
9.5.5 Message Review 9-10
9.5.6 Intrasite/Intersite Communications 9-10
9.6 Event Timers 9-10

Section 10. Software Requirements

10.1 System/Subsystem Definition, Design and Implementation 10-1
10.1.1 Software Design and Implementation Requirements 10-1
10.2 Performance Verification Matrix 10-2
10.3 Languages/Development and Maintenance Tools 10-2
10.3.1 Program Language 10-3
10.3.2 Development and Maintenance Tools 10-3

10.4 WSC ADPE Operations Concepts 10-4

10.5 System Modeling Requirements..... 10-4

Section 11. Software Maintenance and Training Facility (SMTF)

11.1 Equipment Requirements..... 11-1

11.1.1 Testing/Simulators 11-3

11.2 Software Delivery Tools..... 11-3

11.3 Configuration Management and Quality Assurance 11-4

11.4 Maintenance Tools 11-4

11.5 Training Requirements..... 11-4

11.6 Security Requirements..... 11-4

Section 12. Maintenance Test Group (MTG)

12.1 Maintenance Test Group (MTG) Functional Requirements 12-1

12.2 Scope 12-1

12.2.1 Special Test Equipment 12-2

12.2.2 Standard Equipment..... 12-2

12.3 Interfaces..... 12-2

Section 13. Reliability/Maintainability/Availability (R/M/A) Requirements

13.1 Reliability..... 13-1

13.1.1 Mean Time Between Failures (MTBF)..... 13-1

13.2 Maintainability..... 13-1

13.2.1 Fault Isolation..... 13-2

13.3 Inherent Availabiity (A_i) 13-2

13.4 Operational Availability (A_o)..... 13-3

13.4.1 Operational Availability of Customer Services 13-3

13.4.2 Operational Availability of S-band TT&C..... 13-4

13.4.3 Operational Availability Computation 13-4

Section 14. Equipment Design and Construction

14.1 General Requirements for Electronic Equipment 14-1
14.1.1 Equipment of New Design or Significantly Modified Design 14-1
14.1.2 Commercially Available Equipment 14-1
14.2 Electronic Equipment Racks 14-1
14.3 Rack Mounting of ADPE 14-2
14.4 Cabling and Connectors 14-2
14.5 Electromagnetic Interference (EMI) 14-2

Section 15. Installation Requirements

15.1 Installation 15-1
15.1.1 Site Planning 15-1
15.1.2 Site Preparation 15-1
15.1.3 Equipment Installations 15-1
15.1.4 Grounding 15-1
15.1.5 Post-Shipment Installation and Test 15-2

Section 16. Documentation

16.1 Documentation Automation 16-1
16.2 Drawings 16-1

Section 17. Training

17.1 Objectives and Approach 17-1
17.2 Training Program 17-1
17.2.1 Skill Area Requirements 17-2
17.3 Training Devices and Equipment 17-2
17.4 Training Support 17-3

Section 18. Maintenance Requirements

18.1 Overview 18-1
18.2 Detailed Maintenance Requirements 18-1

18.2.1 Hardware Maintenance 18-1
18.2.2 Software Maintenance 18-2

Section 19. Spares Provisioning

19.1 Overview 19-1

19.2 Provisioning Conferences 19-1

19.3 Initial Spares Provisioning 19-2

19.4 Replenishment Spares 19-2
19.4.1 Spare Parts Availability 19-2

Section 20. Security

20.1 System High Security Mode 20-1

20.2 Color Change and Declassification Procedures 20-1

20.3 Discretionary Access Control 20-3

20.4 Identification and Authentication 20-3

20.5 Audit 20-3

20.6 Removable Magnetic Media Labeling 20-4

20.7 Software Protection 20-4

Appendix A. Ephemeris Computations for Customer Support in the WSC

A.1 Introduction A-1
A.1.1 State Vector Types A-1
A.1.2 Delta-T Messages A-1
A.1.3 Vector Processing Ground Rules A-2

A.2 Incorporating Vectors and Delta-T Messages into a Composite Customer Ephermeris .. A-2
A.2.1 IIRV Message Verification A-2
A.2.2 Nominal and Real-Time Modes A-3
A.2.3 Updating the Composite Customer Ephemeris in the Executive ADPE Subsystem A-4
A.2.4 Updating the Customer Ephemeris in the USS and TT&C ADPE Subsystems A-5

A.3 Mathematical Specifications A-7
A.3.1 Time A-7

A.3.2 Coordinates and Transformations A-8
A.3.3 Stationary and Ground Terminal Vector Propagation A-10
A.3.4 Free-Flight Vector Propagation A-11
A.3.5 Interpolation of the Composite Customer Support Ephemeris and the TDRS Ephemeris A-16
A.3.6 Delta-T Rotation Matrix A-17

A.4 Vector Processing Ground Rules A-17

A.4.1 General Application A-17
A.4.2 Maneuver Sequences A-19
A.4.3 Delta-T Applications A-21
A.4.4 Real-Time Mode A-22

Appendix B. Data Presence Monitoring and Data Quality Monitoring Functional Requirements

B.1 Introduction B-1

B.2 Data Presence Monitoring Requirements B-1

B.3 Data Quality Monitoring Requirements B-1

B.3.1 DQM Configurable Parameters B-2
B.3.2 DQM Synchronization Strategy B-2
B.3.3 DQM Status Data B-4

Appendix C. NASCOM Formatting, Reformatting, Multiplexing and Demultiplexing Functional Requirements

C.1 Introduction C-1

C.2 Low-Rate Data Formatting, Multiplexing and Demultiplexing C-1

C.2.1 Overview of Low-Rate Data Processing Requirements C-1
C.2.2 Low-Rate Multiplexing C-11
C.2.3 Low Rate Demultiplexing C-15
C.2.4 Control and Monitoring Functions C-18

C.3 High Data Rate Formatting and Multiplexing C-20

C.3.1 Multiplexing/Transmitting C-20
C.3.2 Monitoring and Test Functions C-21
C.3.3 Control and Monitoring Functions C-24

Abbreviations and Acronyms

Figures

Figure 1-1. The NASA Space Network with the WSC 1-2

Figure 1-2 Functional Switching Drawing Conventions..... 1-7

Figure 3-1. Reference TDRSS Customer Service Overview 3-2

Figure 3-2. TDRSS Customer Interface Overview 3-12

Figure 3-3. TDRSS Forward and Return Service Frequency Plan Overview.....3-13

Figure 4-1. Danzante Ground Terminal Reference Architecture 4-2

Figure 4-2. Cacique Ground Terminal/GRGT Reference Architecture..... 4-3

Figure 5-1. SGLT Reference Architecture..... 5-2

Figure 5-2. Dual Band SGLT Antenna Reference Architecture 5-12

Figure 5-3. Ku-Band Antenna Subsystem Reference Architecture.....5-13

Figure 5-4. Third SGLT Antenna Switching Reference Architecture 5-14

Figure 5-5. USS SSAF Reference Architecture.....5-31

Figure 5-6. USS KSAF Reference Architecture 5-33

Figure 5-7. MA USS Reference Architecture-MAF and Range Extraction Equipment…5-35

Figure 5-8. USS SSAF Functional Diagram.....5-37

Figure 5-9. USS KSAF Functional Diagram 5-39

Figure 5-10. USS MAF Functional Diagram 5-42

Figure 5-11. Radiated Interference Density Level Requirement in the KSAR Frequency Band from all USS Forward Service Equipment.....5-48

Figure 5-12. USS SSAR Reference Architecture 5-66

Figure 5-13. USS KSAR Reference Architecture.....5-68

Figure 5-14. MA USS Reference Architecture-MAR and Doppler Extraction Equipment.....5-70

Figure 5-15. USS SSAR Functional Diagram 5-72

Figure 5-16. USS KSAR Functional Diagram.....5-75

Figure 5-17. USS MAR Functional Diagram.....5-78

Figure 5-18. TDRS Induced SSAR Amplitude Distortion Region.....5-90

Figure 5-19. TDRS Induced SSAR Phase Distortion Region 5-91

Figure 5-20. Coded and Uncoded Data at 0.01% Jitter..... 5-108

Figure 5-21. Uncoded Data at 0.1% Jitter for $R_S \leq 20$ Msps 5-108

Figure 5-22. Uncoded Data at 0.1% Jitter for ($20 < R_S \leq 40$) Msps 5-108

Figure 5-23. Uncoded Data at 0.1% Jitter for ($40 < R_S \leq 75$) Msps 5-109

Figure 5-24. Uncoded Data at 0.1% Jitter for ($75 < R_S \leq 150$) Msps Coded Data at 0.1% Jitter for ($R_S \leq 150$) Msps..... 5-109

Figure 5-25. TDRS Induced KSAR Phase Distortion Region..... 5-117

Figure 5-26. USS SA Tracking Equipment Reference Architecture (For 1 SA Service) 5-141

Figure 5-27. Functional Diagram of the USS SA and MA Tracking Equipment..... 5-143

Figure 5-28. TT&C SGLT Functional Area Overview..... 5-150

Figure 5-29. TTCS Reference Architecture..... 5-152

Figure 5-30. TTCS Functional Diagram..... 5-154

Figure 5-31. TDRSS Command Format After Successful Verification..... 5-161

Figure 5-32. Interface/Flow Diagram -- TT&C Subsystem..... 5-176

Figure 5-33. PMMS Reference Architecture..... 5-179

Figure 5-34. SGLT CDCN Reference Architecture..... 5-185

Figure 5-35. CDCN Functional Interfaces 5-190

Figure 5-36. USS SA ADPE Subsystem Reference Architecture..... 5-201

Figure 5-37. USS MA ADPE Subsystem Reference Architecture..... 5-202

Figure 5-38. TT&C ADPE Subsystem Reference Architecture..... 5-216

Figure 5-39. PMM ADPE Subsystem Reference Architecture..... 5-238

Figure 5-40. EET Equipment Reference Architecture (One Per SGLT)..... 5-244

Figure 6-1. S-Band TT&C System Functional Area Overview..... 6-3

Figure 6-2. S-Band TT&C System Reference Architecture -- ADPE Subsystem..... 6-4

Figure 6-3. S-Band TT&C System Reference Architecture -- S-Band TT&C Ground Equipment (STGE)..... 6-5

Figure 6-4. S-Band TT&C System Reference Architecture -- Antenna Subsystem 6-6

Figure 7-1. CTFS Reference Architecture 7-2

Figure 8-1. DIS Reference Architecture 8-1
Figure 8-2. DIS Reference Functional Flow..... 8-3
Figure 8-3. TDM Processing Functional Diagram..... 8-5
Figure 8-4. DIS Secure Voice/Data Functional Flow 8-7
Figure 8-5. Customer Data Rate Ranges..... 8-9
Figure 8-6. Communications Switch Functional Flow.....8-11
Figure 8-7. GSTDN Command Block.....8-27
Figure 8-8. SUE Reference Functional Configuration 8-30
Figure 8-9. GDIS Reference Architecture and Functional Flow.....8-37
Figure 9-1. Reference TOCC Workstation 9-2
Figure 9-2. TOCC Interfaces 9-8
Figure 11-1. SMTF Reference Architecture (Danzante Only).....11-2
Figure 20-1. Security Considerations 20-2
Figure B-1. DQM Synchronization Strategy.....B-3
Figure C-1. Multiplexer Functional Flow C-2
Figure C-2. Demultiplexer Functional Flow C-3
Figure C-3. NASCOM Link Control Header Format.....C-6
Figure C-4. NASCOM 4800-Bit Block Format C-7
Figure C-5. PB-4 Time Code Format C-8
Figure C-6. Modified Network Header C-9
Figure C-7. NASCOM TDRSS 4800-Bit Block Format C-11
Figure C-8. Frame Format Diagram..... C-22
Figure C-9. 2047-Bit PN Fill Pattern Generation C-24

Tables

Table 3-1. TDRSS Link Capabilities (Single Access)..... 3-3
Table 3-2. TDRSS Link Capabilities (Multiple Access)..... 3-3
Table 3-3. TDRSS SA Forward Service Signal Characteristics (Except Shuttle)..... 3-5
Table 3-4. TDRSS SA Return Service Signal Characteristics 3-7

Table 3-5. TDRSS Shuttle Unique Service Signal Characteristics 3-9
Table 5-1. SGLT Customer Service Capabilities 5-4
Table 5-2. Ku-band Transmit RF Characteristics.....5-17
Table 5-3. Ku-band Receive RF Characteristics.....5-18
Table 5-4. S-band Transmit RF Characteristics (Danzante Only).....5-20
Table 5-5. S-band Receive RF Characteristics (Danzante Only).....5-20
Table 5-6. Mechanical Characteristics 5-22
Table 5-7. Equipment and Performance Status Monitoring Requirements.....5-28
Table 5-8. Antenna Subsystem Interface.....5-29
Table 5-9. SSAF Service Signal Parameters 5-44
Table 5-10. SSHF Service Signal Parameters 5-45
Table 5-11. Signal Constraint Requirements for SSAF Service Equipment.....5-45
Table 5-12 SSAF Signal Performance Requirements.....5-47
Table 5-13. SSAF and SSHF Doppler Compensation Requirements.....5-49
Table 5-14. SSAF IF Output Port (Unmodulated IF).....5-50
Table 5-15. SSAF IF Input Port (Modulated IF) 5-50
Table 5-16. KSAF Service Signal Parameters.....5-51
Table 5-17. KSHF Service Signal Parameters.....5-52
Table 5-18. Signal Constraint Requirements for KSAF Service Equipment 5-53
Table 5-19. KSAF Signal Performance Requirements 5-55
Table 5-20 KSAF and KSHF Doppler Compensation Requirements.....5-56
Table 5-21. KSAF IF Output Port (Unmodulated IF) 5-57
Table 5-22. KSAF IF Input Port (Modulated IF).....5-57
Table 5-23. MAF Service Signal Parameters 5-58
Table 5-24. Signal Constraint Requirements for MAF Service Equipment 5-59
Table 5-25. MAF Signal Performance Requirements 5-61
Table 5-26. Doppler Compensation Requirements-MAF Services 5-62
Table 5-27. USS SAF Equipment Interfaces.....5-63
Table 5-28. MAF Equipment Interfaces.....5-64

Table 5-29. SSAR Service Signal Parameters 5-80

Table 5-30. SSHR Service Signal Parameters 5-82

Table 5-31. Customer Spacecraft Dynamics 5-84

Table 5-32. SSAR Allowable Implementation Loss, $L(P_E, R_b)$-Rate 1/2 Coding 5-88

Table 5-33. SSAR and SSHR Allowable Implementation Loss, $L(P_E, R_b)$-Rate 1/3 Coding 5-89

Table 5-34. SSHR Allowable Implementation Loss, $L(P_E, R_b)$ 5-89

Table 5-35. Acquisition Performance for SSAR and SSHR (Pn Code and Carrier Acquisition) 5-93

Table 5-36. Acquisition Frequency Uncertainty for SSHR Services (Delta From Nominal at SGL Antenna Input) 5-94

Table 5-37. Additional Input Signal Distortions 5-99

Table 5-38. SSA Return IF Port Requirements 5-100

Table 5-39. KSAR Service Signal Parameters 5-100

Table 5-40. KSHR Service Signal Parameters 5-103

Table 5-41. KSAR and KSHR Allowable Implementation Loss, $L(P_E, R_b)$-Coded Performance 5-113

Table 5-42. KSAR and KSHR Allowable Implementation Loss, $L(P_E, R_b)$-Uncoded Performance 5-114

Table 5-43. Acquisition Performance For KSAR And KSHR 5-145

Table 5-44. Additional Input Signal Distortions 5-122

Table 5-45. KSA Return IF Port Requirements 5-123

Table 5-46. Television Quality Requirements 5-124

Table 5-47. MAR Service Signal Parameters 5-126

Table 5-48. MAR Allowable Implementation Loss, $L(P_E, R_b)$ 5-132

Table 5-49. Acquisition Performance Requirements for MA (PN Code and Carrier) 5-134

Table 5-50. Additional Input Signal Distortions 5-137

Table 5-51. USS SAR Equipment Interfaces 5-138

Table 5-52. USS MAR Equipment Interfaces 5-139

Table 5-53. Required Tracking Services for Service Support Configuration 5-142

Table 5-54. Maximum RMS Doppler Frequency Error (Radians/Sec) 5-145

Table 5-55. Range Measurement Standard Deviation 5-146
Table 5-56. Tracking Service Equipment - Internal Interfaces 5-148
Table 5-57. Tracking Service Equipment - External Interfaces 5-149
Table 5-58. Command Encoder Manual Control Functions 5-163
Table 5-59. Pilot Signal Characteristics (Ku-band Operations Only) 5-164
Table 5-60. Telemetry Signal Characteristics and Performance 5-170
Table 5-61. Frame Synchronization Protocol 5-171
Table 5-62. TTCS Equipment Control 5-174
Table 5-63. TTCS Interfaces 5-175
Table 5-64. External Interfaces-PMMS 5-184
Table 6-1. Transmit RF Characteristics 6-8
Table 6-2. Receive RF Characteristics 6-9
Table 6-3. Mechanical Characteristics 6-10
Table 6-4. S-band TT&C Equipment Interface Requirements 6-17
Table 7-1. Cesium Beam Frequency Standard Performance Requirements 7-8
Table 7-2. Disciplined Oscillator Performance Requirements 7-9
Table 7-3. Redundancy Switch Performance Requirements 7-10
Table 7-4. Output Signal Characteristics 7-12
Table 7-5. WWVB Receiver Performance Requirements 7-14
Table 7-6. Global Positioning System Time Transfer Unit Performance Requirements 7-14
Table 7-7. Loran-C Receiver Performance Requirements 7-15
Table 7-8. Time Interval Counter Performance Requirements 7-15
Table 7-9. Linear Phase Detector/Recorder Performance Requirements 7-16
Table 8-1. Connectivity Requirements for Local Area Network 8-17
Table 8-2. Connectivity Requirements for GSFC/Inter-Terminal Mux/Demux 8-18
Table 8-3. Connectivity Requirements for Black Data Switch 8-19
Table 8-4. Connectivity Requirements for Communications Switch 8-28
Table 8-5. Shuttle Payload Interrogator 1.024 MHz Subcarrier Signal Parameters 8-35

Table 8-6. Connectivity Requirements for GDIS 8-39
Table 8-7. GSFC/JSC/GRGT Common Carrier (CC) Interfaces 8-55
Table 8-8. Inter-Terminal Interfaces 8-56
Table 8-9. Local Interfaces 8-57
Table 13-1. A_i for each WSC Ground Terminal 13-2
Table 13-2. Customer Services A_o for each WSC Ground Terminal 13-3
Table 13-3. S-band TT&C A_o for each WSC Ground Terminal 13-4
Table A-1. Modified Julian Dates A-8
Table A-2. Vectors from the Sixth-Order Starter Algorithm A-13
Table A-3. Sixth-Order Position Corrector Coefficients A-14
Table A-4. Sixth-Order Position Predictor Coefficients A-15
Table A-5. Sixth-Order Velocity Corrector Coefficients A-15
Table A-6. Maneuver Vector Sequence Formats A-20
Table C-1. GSFC/JSC Multiplexer Formats C-4
Table C-2. GSFC Demultiplexer Formats C-4
Table C-3. JSC Demultiplexer Formats C-5
Table C-4. Line Outage Recorder Playback Demultiplexer Formats C-5
Table C-5. Sync and End of Frame Patterns C-23
Table C-6. 31-Bit PN Test Pattern C-26

Section 1. Scope

1.1 Overview

This specification establishes the architectural, operational, functional, performance, maintenance, and installation requirements for the White Sands Complex (WSC). As used in this specification, the WSC consists of three ground terminals: the Danzante Ground Terminal, the Cacique Ground Terminal, and the Guam Remote Ground Terminal (GRGT). Danzante and Cacique are independently operated ground terminals. GRGT is a Space-to-Ground Link Terminal (SGLT) extended from and operated remotely via the Cacique Ground Terminal. In addition, the requirements for system software, Reliability/Maintainability/Availability (R/M/A), design and construction, sparing, documentation, security, and training for the WSC are specified. The WSC shall process and provide the required levels of protection for Department of Defense (DoD) classified information.

The WSC is an element of the National Aeronautics and Space Administration (NASA) Space Network (SN). The SN is a NASA resource for providing tracking, telemetry, and command (TT&C) support for low-earth orbiting satellites via geostationary space relay. The SN includes the Tracking and Data Relay Satellite System (TDRSS), control facilities at the Network Control Center (NCC) located at the Goddard Space Flight Center (GSFC), and NASA Communications Network (Nascom). The TDRSS contains a space segment constellation of Tracking and Data Relay Satellites (TDRSs) providing full earth coverage and the WSC ground segment. Figure 1-1 illustrates the relationship of the WSC to the TDRSS and to the other elements of the SN. The WSC will provide, in conjunction with the TDRSS, forward (ground-to-space) and return (space-to-ground) communication services and tracking services for SN customer satellites and will perform TT&C functions for the TDRSs. The Danzante and Cacique Ground Terminals will serve as an operational backup to the other in the event of a failure or performance degradation.

The Danzante and Cacique Ground Terminals are located in government facilities on the NASA White Sands Test Facility (WSTF), New Mexico. The GRGT is located in government facilities at the Naval Computer and Telecommunications Area Master Station (NCTAMS), Guam.

1.2 Objective

The objective of the WSC is to provide a minimum life-cycle-cost, operator-friendly capability for providing SN customers with TDRS telecommunication and tracking services with high operational availability, failsoft operations, improved performance, and improved maintainability. This objective is to be attained by the application of relevant state-of-the-art hardware and software technologies, innovative design approaches, and utilization of automation.

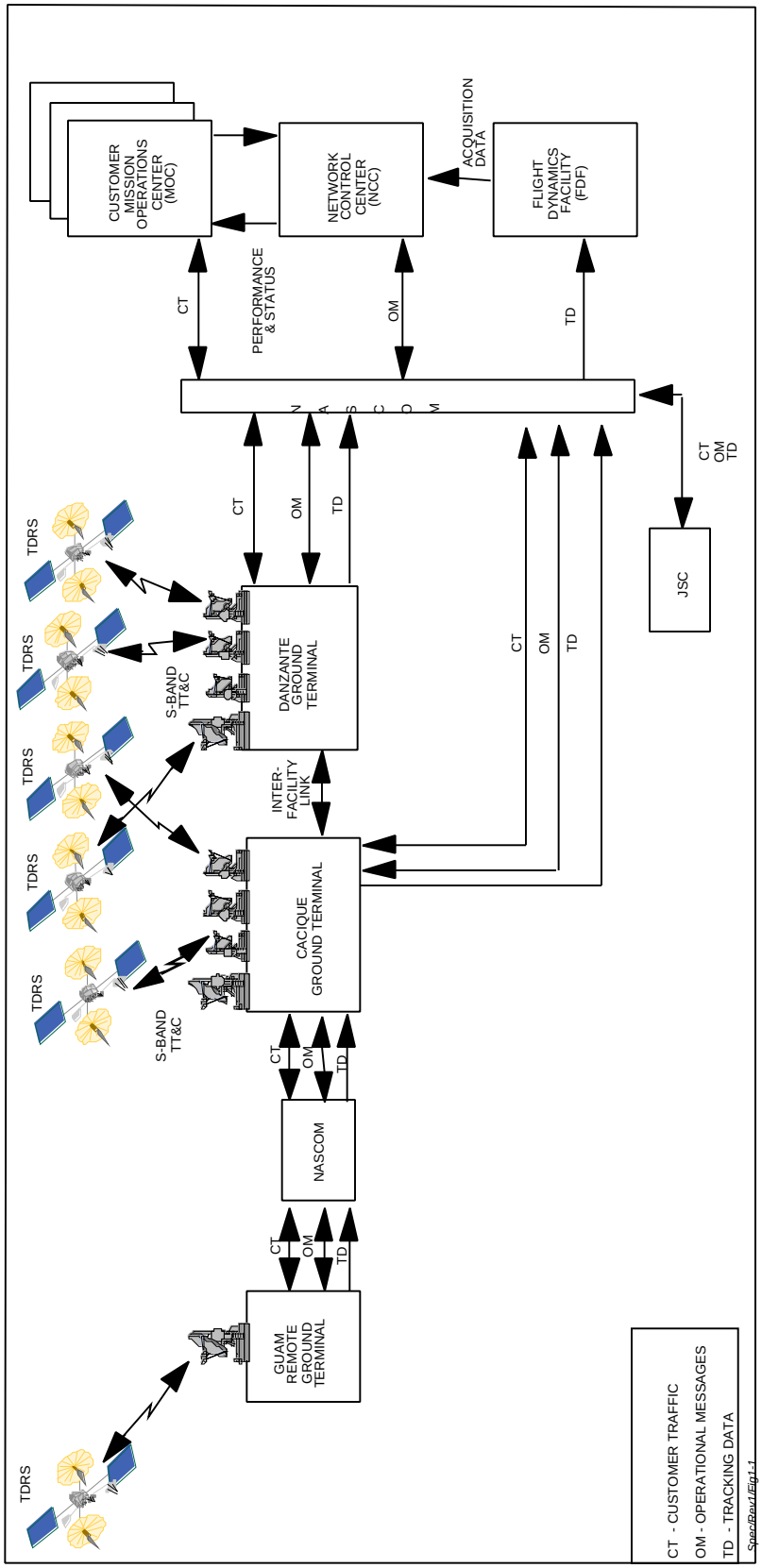

Figure 1-1. The NASA Space Network with the WSC

1.3 Requirements

The requirements of this specification are for three ground terminals operating with Tracking and Data Relay Satellites, Flight F-1, and F-3 through F-7. Danzante shall contain three autonomous SGLTs, Cacique shall contain two autonomous SGLTs, and GRGT shall contain a single SGLT capable of providing customer forward, return, and tracking services and TT&C functions for assigned TDRSs. A modular approach to hardware and software implementation shall be employed in a manner which permits changes and enhancements during the operational, phase, with minimum changes in existing hardware and software and minimum impact to on-going support operations. Signal and data processing functions, performance monitoring, and fault detection and isolation capabilities shall be designed and implemented in accordance with the architectural, operational, functional, and performance requirements specified herein. The WSC shall operate year-round, 24 hours a day.

Each SGLT shall receive NCC schedule and operations messages and customer data from the Data Interface System (DIS), shall transmit customer data for forward transmission to the customer spacecraft via an assigned TDRS, shall receive customer spacecraft return data via the same TDRS, and shall send return data to customers via the DIS and customer tracking data to GSFC and Johnson Space Center (JSC) via the DIS. Each SGLT shall perform TDRS TT&C functions to provide SGLT/customer spacecraft RF communication links, to monitor the health and status of the TDRS, and to control the position, attitude, and configuration of the TDRS.

Each SGLT shall provide:

a. Two S-band single access (SSA) forward links.

b. Two SSA return links.

c. Two Ku-band single access (KSA) forward links.

d. Two KSA return links.

e. One Ku-band TDRS command and ranging uplink channel.

f. One Ku-band TDRS telemetry and ranging downlink channel.

g. Two-way range and one-way and two-way Doppler measurements for customer spacecraft.

h. One TDRS pilot tone uplink.

i. One multiple access (MA) forward and five MA return links for only two SGLTs at Danzante and Cacique.

j. One MA forward and two MA return links for the GRGT SGLT.

k. End-to-End Test (EET) capability.

Danzante and Cacique each shall contain an S-band TDRS TT&C capability independent of the SGLTs. In addition, Danzante and Cacique each shall include a DIS which shall provide an interface with Nascom. Distribution of voice and facsimile within the WSC facility and between the WSC and other NASA facilities will be provided by an Intrasite/Intersite Communications System (ICS). An autonomous capability (the Software Maintenance and Training Facility

(SMTF) shall be provided at the Danzante Ground Terminal for the development, enhancement, and maintenance of system software and training of operations and maintenance personnel. A Hardware Maintenance Depot (HMD) shall also be provided at the Danzante Ground Terminal for the repair of WSC hardware.

The Ground Terminals shall be compatible with existing TDRSs and shall have the flexibility for upgrade to meet changing NASA requirements. The MA, SSA, and KSA forward and return link service equipment and tracking service equipment specified herein shall be consistent with the services defined in 530-SNUG, Space Network User's Guide.

The Ground Terminals communicate with the NCC, the Flight Dynamics Facility (FDF), JSC Mission Control Center (MCC), and Mission Operations Control Centers (MOCCs) and Ground Spaceflight Tracking and Data Network (GSTDN) facilities, via the DIS, for the interchange of customer data, tracking data, and operational messages. The RF interfaces with a TDRS for the reception of customer satellite telemetry data, reception of TDRS telemetry and tracking data, and for the transmission of customer and TDRS command data shall be in accordance with STDN 220.29, TDRSS Spacecraft/Ground Segment Interface Control Document.

1.4 Specification Organization

The requirements for the WSC are contained in the main body of this document. The architectural, functional, performance, interface, and operations requirements of the WSC and its components and functional elements employed in customer support operations are specified in Sections 4 through 9. The requirements for WSC software design and development are defined in Section 10, and the specifications for the SMTF are given in Section 11. The requirements for equipment design and construction, installation, maintenance (including the Hardware Maintenance Depot), spares, system documentation, training, R/M/A, and security are specified in Sections 12 through 20.

Appendix A specifies the algorithms for customer and TDRS ephemeris generation.

Appendix B provides detailed definition of DPM/DQM functional requirements.

Appendix C specifies the requirements for data formatting, multiplexing and demultiplexing in the Data Interface System.

1.5 Definitions

For the purpose of this Specification, the following definitions shall apply:

a. Equipment Chain. The equipment required to process a signal between RF and baseband.

b. Prime Equipment Chain. One of two or more functionally and operationally identical equipment chains which has been configured for and which has been designated for or is engaged in operational support of a WSC function.

c. Redundant Equipment Chain. One of two or more functionally and operationally identical equipment chains which has not been designated for operational support of a WSC function.

d. Hot-Standby Mode. The mode of a redundant equipment chain which is configured for the same operational support of a WSC function as a designated functionally and operationally identical prime equipment chain, is performing the system function concurrent with this prime equipment chain except with regard to the destination of the output, is being monitored to determine its status and performance, and is capable of assuming prime status without significant loss of data.

e. Warm-Standby Mode. The mode of an equipment chain not in hot-standby mode in which the power is on, the chain is available for service, and all status indicators show the chain to be in working order.

f. Failover. The functional capability of the system to provide unambiguous indication of a failure prejudicial to effective customer support in a prime chain/assembly/equipment and to effect transfer of support to a corresponding hot-standby redundant chain/assembly/equipment. The failover function may be initiated automatically within pre-programmed limits or manually, subject to operator discretion.

g. Failsoft. Failsoft is the system characteristic which results from the incorporation of redundancy, the implementation of procedures and mechanisms for failover to redundant equipments, the use of distributed processing, and the establishment of alternative modes of operations to enhance the availability of the system for providing services through the avoidance of single-point failures.

h. Operator Friendliness. Design criteria which include the application of human engineering principles to hardware implementation to reduce operator fatigue and stress and to minimize operator-induced errors. The design criteria also require the incorporation of software which results in clear, intelligible, and unambiguous displays, logical operational sequences, and prevents the propagation of software-induced errors.

i. Logging. Logging is the process of recording information (as on magnetic disk) at the time the information is generated for the purpose of relatively short-term retention. Logged data is an on-line record and is available to the computer as may be required.

j. Delogging. Delogging is the process of extracting selected logged or archived data for analysis. Delogging includes the provision of hardcopy printout of pre-processed or post-processed data.

k. Archiving. Archiving is the process of transferring logged data to another storage medium, such as magnetic tape, for relatively long-term retention. Archived data may not be compressed nor reduced. Archived data is an off-line record in a form which permits easy reentry into the system.

l. Stand-Alone. Stand-alone refers to an operational mode of a chain/assembly/equipment in which it performs its designated function, using its integral hardware, software, and stored resources, in the absence of control from sources external to the chain/assembly/equipment.

m. Built-in-Test (BIT). The capability incorporated in the design for a process (function) which readily lends itself to inclusion of an internal test capability to indicate that a fault exists within a line replaceable unit (LRU) and further isolates a fault within the LRU. Test signal generation, test algorithms, and fault isolation are performed by the inherent process (function). For example, in a digitally implemented, microprocessor-controlled receiver, the microprocessor generates the test signals, contains the test algorithms, and makes decisions based on the results of tests. The design of the LRU will determine whether the BIT capability can operate on-line without interfering with the normal function of the LRU. If necessary, BIT shall operate off-line.

n. Built-in-Test-Equipment (BITE). The complementary process (function) and the necessary signal generation and performance measurement equipment are contained within a LRU. This capability allows the LRU to be operated in a self-test (LRU local loop) mode. The controls for the self-test and the display of the results of test are contained on the front panel of the LRU. Similarly, software included to perform a software function complementary to the operational function for the purpose of testing software performance is also considered to be BITE. A hardware example of the incorporation of BITE: Full-duplex convolutional encoder/Viterbi decoder with a self-test mode in the return service chain. The design of the LRU and the nature of the BITE will determine whether the BITE can operate on-line without interfering with the normal function of the LRU. BITE shall function off-line.

o. TV/Analog Data. TV/Analog Data refers to analog video and other wideband analog information originated by the Shuttle and received by the WSC as a frequency modulated signal. The video baseband will be in National Television System Committee (NTSC) color television format, except for audio and audio subcarrier. The WSC can insert audio, received on a channel separate from the video channel, in NTSC format for transmission to customers.

p. Functional Switching Drawing Convention. Figure 1-2 illustrates the functional switching drawing conventions.

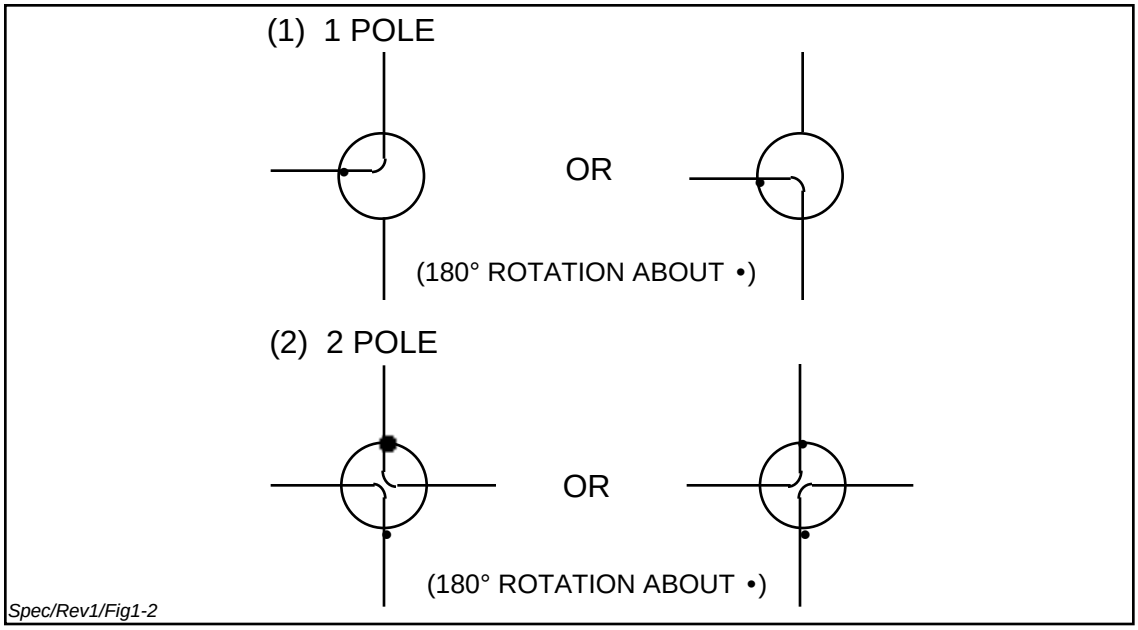

Figure 1-2. Functional Switching Drawing Conventions

Section 2. Applicable and Reference Documents

2.1 Applicable Documents

The following documents are part of this specification to the extent cited herein. The most recent version of these documents takes precedence. If there are conflicts between the listed documents and the requirements of this specification, the requirements of this specification shall take precedence. In the event of conflict between other listed documents, the order of precedence shall be as follows:

a. The requirements of NASA documents shall take precedence over the requirements of other listed documents.

b. The requirements of other Government documents shall take precedence over contractor documents and industrial standards.

Where no section number is shown, the whole document shall apply.

2.1.1 NASA Documents

Document Number	Document Title
405-F7-ICD-001	TDRS F-7 Interface Control Document for the TDRS Spacecraft/Ground Segment
530-ICD-GRGT-GCF	Interface Control Document between the Guam Remote Ground Terminal (GRGT) and the Ground Communications Facility (GCF)
530-ICD-NCC-FDF/WSC	Interface Control Document (ICD) between the Network Control Center (NCC)/Flight Dynamics Facility (FDF) and the White Sands Complex (WSC)
530-ICD-WSC/SP	Interface Control Document between the White Sands Complex and the Secure Programs Interface Panel.
530-SNUG	Space Network User's Guide, Sections 2.3, 2.4, 2.5, Appendices B, E, and F
530-WSC-LOP	White Sands Complex Local Operating Procedures (LOP), Volume Set
532-FPR-TDF	Functional and Performance Requirements for the Tracking Data Formatter
532-PVP-GRGT	GRGT Performance Verification Plan

Document Number	Document Title
534-OIP-NCC/STGT	Operations Interface Procedures between the Goddard Space Flight Center Network Control Center and the Second TDRSS Ground Terminal
DOD-STD-2167	Defense System Software Development
DOD-STD-2167, STGT Tailored Version	Defense System Software Development, STGT Tailored Version
GA-GEM-1331331	Contractor Administered Training Course, Sections 6, 9, 12
GHB 1600.1A	Goddard Space Flight Center Security Manual
GSFC FDF/552-89/001	Mathematical Theory of the Goddard Trajectory Determination System, Sections 3.2.2, 3.3, 3.4.3, and 3.4.7.
ICD-2-0D004	JSC/GSFC Space Shuttle RF Communications and Tracking, Sections 4.2.1, 4.2.2, 4.2.4, 4.2.6, 4.2.7, and 4.2.8.1
NHB 1620.3A	NASA Security Handbook
NHB 2410.9A	NASA Automated Information Security Handbook
S-323-P-5A	Quality Assurance Requirements for Standard Industrial Equipment
S-530-1	GSFC Specification for Ground System Spare Parts Program
S-572-P-3B	Engineering Drawing Standards and Specifications
SN SCG	Space Network Security Classification Guide
STDN 102	STDN Documentation System
STDN 102.1	Standard for Preparation of STDN Operations Documents
STDN 102.8	Handbook for Interface Control Documents for Non-Project Related Ground Facilities
STDN 108	PN Codes for Use with the Tracking and Data Relay Satellite System (TDRSS)

Document Number	Document Title
STDN 203.7	Functional and Performance Requirements for the Tracking and Data Relay Satellite/Spaceflight Tracking and Data Network (TDRSS/STDN) User Transponder
STDN 220.29	TDRSS Spacecraft/Ground Segment ICD
STDN 220.30	Interface Control Document (ICD) Between the Second TDRSS Ground Terminal (STGT) and Ground Communications Facilities
STDN 402	STDN System Maintenance Program, Section 3
STDN 507	Network Logistics Manual
STDN-No. 270.5	GSFC Specification Electronic Equipment Racks
STDN-No. 270.7	GSFC Specification Grounding System Requirements for STDN Stations
STDN-SPEC 3	Specification Programming and Handling Semiconductor Devices
STDN-SPEC-1	Specification Preparation and Acceptance of Technical Manuals
STDN-SPEC-10	Specification Station Handbook Documentation
STDN-SPEC-4	GSFC General Requirements for STDN Electronic Equipment
STDN-SPEC-6	GSFC Specification Installation Requirements for STDN Equipment
STDN-SPEC-8	GSFC Specification for Electronic Equipment Installation Materials
STDN-SPEC-9	Specification Drawing System
STGT-HE-06-3	Algorithms and Constraints Interface Control Document Book 1, Section 4
STSOC-PR-400002, Volume III	Integration and Validation Test Procedures, Vol. III, External Validation Test Procedures, paragraph 7.4

Document Number	Document Title
WS-SE-0101 (STR)	White Sands Ground Terminal Software Task Requirements, Volumes 1-VI, Sections ACS-1, 2, 3 Mod I, 4, 6, 7, 12, 13, 15, 16, 21, 23, 24; C-1, 2, 9, 14, 15; H-8, 9, 14; D-7; OPS-12, 21, 24, 25, 26; ET-13, 25; TOS-1; SU-6; SW-1

2.1.2 Military Specifications, Standards, and Handbooks

Document Number	Document Title
MIL-HDBK-217	Reliability Prediction of Electronic Equipment
MIL-STD-470	Maintainability Program for System and Equipment, Task 104
MIL-STD-461	Electronic Emission and Susceptibility Requirements for the Control of Electromagnetic Interference, Part 3
MIL-STD-1553B	Aircraft Internal Time Division Command/Response Multiplex Data Bus

2.1.3 Contractor Documents

Document Number	Document Title
29000-200-003-003	TDRSS System Design Report, Vol. III, Space Segment
29000-200-003-004	TDRSS System Design Report, Vol. I: System Design, Table 5-1
DO1450F	TDRSS Command Requirements
DO1451F	TDRSS Telemetry Requirements
TMO 253 Vols. I-IV	TDRSS Spacecraft Operations Handbook
TMO 254 Vols. I-III	TDRSS Spacecraft Systems Manual
WU-02-01	TDRSS Space Segment Specification

2.1.4 Other Government Documents

Document Number	Document Title
CSC-STD-001-83	DoD Trusted Computer System Evaluation Criteria
CSESD-40A	Communications Security Equipment System Document for KG-81
CSESD-50 (Publication Pending)	Communications Security Equipment System Document for KG-94
IRIG STD 128-77	IRIG Standard Parallel Binary Time Code Formats
NACSIM 5203	National COMSEC Information Manual: Guidelines for Facility Design and Red/Black Engineering, (C)

2.1.5 International Standards

Document Number	Document Title
ISO, 7498-1984	International Standards Organization (ISO) Open System Interconnection (OSI) Reference Model

2.1.6 Industrial Standards

Document Number	Document Title
EIA STD RS-232C	Interface Between Data Terminal Equipment and Data Communication Equipment Employing Serial Binary Data Interchange
EIA STD RS-411	Electrical and Mechanical Characteristics of Antennas for Satellite Earth Stations
EIA STD RS-422	Electrical Characteristics of Balanced Voltage Digital Interface Circuits
IEEE-488	IEEE Standard for Digital Interface for Programmable Instrumentation
IEEE 802	Local Area Network Standards

2.2 Reference Documents

The following documents are for reference only. They provide insight into the operation, characteristics, and interface of the TDRSS. The most recent version of these documents takes precedence.

Document Number	Document Title
530-SNUG	Space Network (SN) User's Guide
GSFC X-582-76-77	Mathematical Theory of the Goddard Trajectory Determination System
GSFC-ME-7848, Vol. 1	Operation and Maintenance Manual for a 50 Mbps Statistical Multiplexer Model 781
GSFC-MH-1182, Vol. 7	GSFC NASCOM-TDRSS/Shuttle Multiplexer-Demultiplexer Data System Operation and Maintenance Manual
GSFC-OM-841-80126	NASCOM-TDRSS Multiplexer-Demultiplexer Data Systems User Interface Manual
STGT-HE-01/03	Second Tracking and Data Relay Satellite System Ground Terminal (STGT) System/Subsystem Specification
ICD-2-0D004	JSC/GSFC Space Shuttle RF Communications and Tracking
P-01	Phase II Requirements Specification for the Second TDRSS Ground Terminal (STGT)
P-01.1	Deviations and Waivers to the Phase II Requirements Specification for the STGT
STDN 203.13/NCCDS	NCCDS Detailed Requirements
29000-200-003-003	TDRSS System Design Report, Vol. II: Ground Segment
29000-200-003-004	TDRSS System Design Report, Vol. I: System Design
	Second TDRSS Ground Terminal Configuration Study, 5/85
	Second TDRSS Ground Terminal Configuration Study SGLT Antenna Ku-S-Band Dual Frequency Feed Study, 1/86
S-805-1B	Performance Specification for Services via the TDRSS

Document Number	Document Title
WU-02-02	TDRSS Ground Segment Specification
WU-02-04	Satellite Systems/SS TDRSS Program Space/Ground Segment Interface Specification

Section 3. Overview Of TDRSS Customer Service via the WSC

3.1 General

This section provides an overview of the customer services provided by the WSC operating as an integral part of the Space Network as defined in the 530-SNUG. The overview includes telecommunication services, service operations, and the TDRSS Frequency Plan. The Multiple Access (MA) services described in this section shall be provided in only two of the SGLTs at Danzante and Cacique, and the GRGT SGLT.

3.2 Telecommunications Services

This section describes WSC support of forward and return customer communication services using Single Access (SA) and MA capabilities including Shuttle-unique service. This section also describes WSC support of customer tracking services.

3.2.1 General

Figure 3-1 provides an overview of the WSC/SGLT TDRSS services provided by a single WSC Ground Terminal. As scheduled by the Network Control Center (NCC), each Ground Terminal uses TDRS to provide forward and return services for low earth-orbiting customer spacecraft. "Forward" is defined as "Ground-to-TDRS-to-Customer Spacecraft" and "return" is defined as "Customer Spacecraft-to-TDRS-to-Ground". Each Ground Terminal also provides scheduled tracking services to support customer spacecraft orbit determination. The customer is responsible for processing customer spacecraft command and telemetry data.

WSC/SGLT support services include:

a. TDRSS SA service which includes both S-band and Ku-band service, referred to as SSA and KSA, respectively. Table 3-1 summarizes SA link capabilities.

b. TDRSS MA service which operates at S-band. Table 3-2 summarizes MA link capabilities.

c. TDRSS SA and MA services which provide, as scheduled, range and range rate tracking data for each spacecraft supported.

3.2.2 Forward Services

This section provides an overview of forward service and signal characteristics.

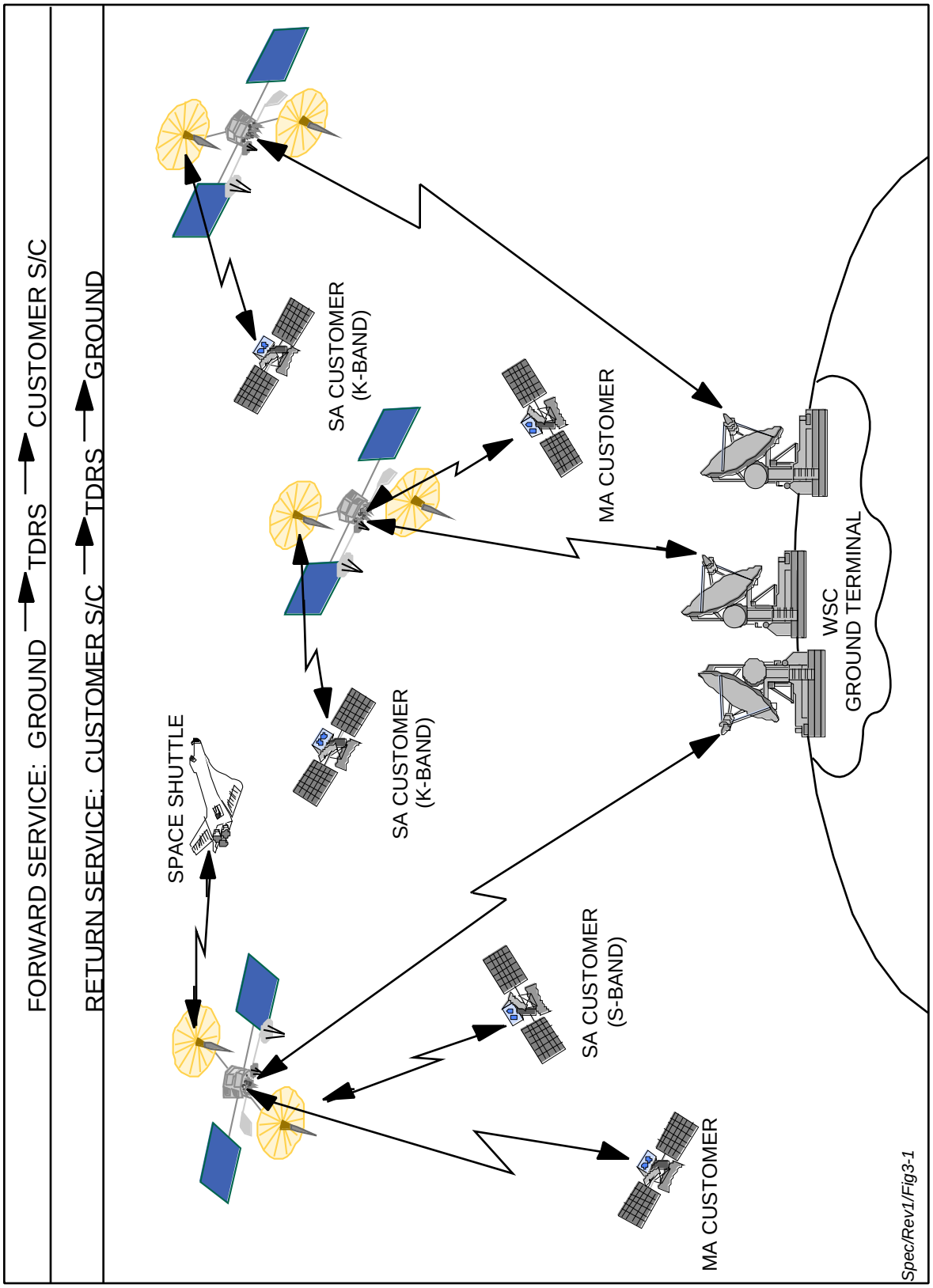

Figure 3-1. Reference TDRSS Customer Service Overview

3.2.2.1 Service Characteristics

Table 3-1. TDRSS Link Capabilities (Single Access)

SINGLE-ACCESS LINK SUMMARY					
BAND	FORWARD LINK			RETURN LINK	
	SGLT - CUSTOMER S/C	DATA RATE		CUSTOMER S/C - SGLT	DATA RATE
S	2	0.1 TO 300 KILOBITS PER SECOND		2	6 MEGABITS PER SECOND MAXIMUM
K	2	1 KILOBIT PER SECOND TO 25 MEGABITS PER SECOND		2	300 MEGABITS PER SECOND MAXIMUM

Table 3-2. TDRSS Link Capabilities (Multiple Access)

MULTIPLE-ACCESS LINK SUMMARY					
BAND	FORWARD LINK			RETURN LINK	
	SGLT - CUSTOMER S/C	DATA RATE		CUSTOMER S/C - SGLT	DATA RATE
S	1	0.1 TO 10 KILOBITS PER SECOND		5[1]	0.1 TO 100 KILOBITS PER SECOND

NOTES

[1]THE INITIAL CAPABILITY FOR THE GRGT SGLT SHALL BE TWO MA RETURN LINKS WITH PROVISION FOR EXPANDABILITY TO FIVE MA RETURN LINKS.

3.2.2.1.1 General

The Danzante Ground Terminal contains three SGLTs, the Cacique Ground Terminal contains two SGLTs, and the GRGT contains a single SGLT. Two of the SGLTs at each Danzante and Cacique, and the GRGT SGLT, with an assigned TDRS can each provide two SSA, two KSA, and one MA forward service simultaneously. The third SGLT at Danzante with an assigned TDRS can provide two SSA and two KSA forward services simultaneously. An SSA and a KSA forward service is provided through each of two TDRS SA antennas. Each SA antenna can normally support forward service to one customer spacecraft at a time, except when the Space Shuttle and associated payloads are within the SSA and KSA antenna beams simultaneously. SSA and KSA forward services can be provided simultaneously to a customer spacecraft using one TDRS SA antenna.

3.2.2.1.2 SSA Forward Service

Each SGLT with an assigned TDRS can provide two SSA forward services. These services are time-shared by all customers of the SSA forward service. Customer spacecraft are discriminated by frequency, polarization, unique Pseudonoise (PN) codes, and TDRS antenna beam pointing. Between service periods, the TDRS transmits a 2030 MHz spread spectrum signal on the SSA forward service using a uniquely assigned pseudonoise code.

3.2.2.1.3 KSA Forward Service

Each SGLT with an assigned TDRS can provide two KSA forward services. These services are time-shared by all customers of the KSA forward service. Customer spacecraft are discriminated by polarization, unique PN codes, and TDRS antenna beam pointing. Between service periods, the TDRS transmits the standard KSA forward spread spectrum signal using a uniquely assigned pseudonoise code.

3.2.2.1.4 MA Forward Services

Two of the SGLTs at each Danzante and Cacique, and the GRGT SGLT, with an assigned TDRS, can each provide one MA forward service. This service is time-shared by all customers of the MA forward service. All customer spacecraft operate at the same frequency and receiving antenna polarization, and are discriminated by unique PN codes and by TDRS antenna beam pointing.

3.2.2.2 Signal Characteristics

Table 3-3 provides a summary of TDRS SA forward signal characteristics. Each SGLT with an assigned TDRS must operate in accordance with established TDRSS signal characteristics. TDRSS forward service (SSA, KSA, and MA) signal consists of a PN code-modulated command channel in quadrature with the PN code-modulated range channel signal for data rates of 300 kbps or less. All forward service data at 300 kbps or less is modulo-2 added asynchronously to the command channel PN code. Forward data greater than 300 kbps are transmitted only via the KSA forward service. The data Binary Phase Shift Key (BPSK) modulates the KSA forward service carrier and the range channel is not transmitted. The maximum available data rates are 300 kbps, 25 Mbps (ground segment limited as specified 8.1.7.b), and 10 kbps, for the SSA, KSA, and MA forward services, respectively.

3.2.3 Return Services

3.2.3.1 General

This section provides an overview of return service and signal characteristics. Each SGLT shall have the capability to combine the signals received from a single customer spacecraft through both SSA return services using the same TDRS, thus providing a customer spacecraft which has degraded Effective Isotropic Radiated Power (EIRP) with a nominal 2.5 dB increase in return service performance. This capability will be used only for S-band customer spacecraft emergency support. An MA customer, during emergencies, may use SSA return service (cross-support) with approximately 10 dB of performance gain over MA return service.

Table 3-3. TDRSS SA Forward Service Signal Characteristics (Except Shuttle)

PARAMETER	SSA DESCRIPTION	KSA DESCRIPTION
COMMAND CHANNEL RADIATED POWER	10 dB	10 dB
RANGE CHANNEL RADIATED POWER		
RANGE CHANNEL		
PN MODULATION	PSK, ± 90°	PSK, ± 90°
PN CHIP RATE	≈3M CHIPS/SEC	≈3M CHIPS/SEC
DATA MODULATION	N/A	N/A
CARRIER FREQUENCY	COMMAND CHANNEL CARRIER FREQUENCY DELAYED 90°	COMMAND CHANNEL CARRIER FREQUENCY DELAYED 90°
COMMAND CHANNEL		
PN MODULATION	PSK, ± 90°	PSK, ± 90°
PN CHIP RATE	≈3M CHIPS/SEC	≈3M CHIPS/SEC
DATA MODULATION	MODULO-2 ADDED ASYNCHRONOUSLY TO PN CODE	MODULO-2 ADDED ASYNCHRONOUSLY TO PN CODE
DATA FORMAT	NRZ	NRZ
DATA RATE	.1-300 kbps	1 kbps-25 Mbps[1]

NOTE

[1]FOR KSA RATE EXCEEDING 300 kbps, PN MODULATION SHALL NOT BE USED AND THE COMMAND CHANNEL DATA SHALL DIRECTLY BPSK MODULATE THE TRANSMITTED CARRIER. THE GROUND SEGMENT IS LIMITED AS SPECIFIED IN SECTION 8.1.7.b.

3.2.3.2 Service Characteristics

3.2.3.2.1 General

Two of the SGLTs at each Danzante and Cacique with an assigned TDRS, can each support two SSA, two KSA, and up to 5 MA return services simultaneously. The third SGLT at Danzante with an assigned TDRS, can support two SSA and two KSA return services simultaneously. The GRGT SGLT can provide two SSA, two KSA and two MA return services simultaneously. An SSA and a KSA return service are provided through each of two TDRS SA antennas. Each SA antenna can normally support return service from one customer spacecraft at a time except when the Space Shuttle and associated payload are within the SSA and KSA antenna beams simultaneously. SSA and KSA return service shall be provided simultaneously to a customer spacecraft using the same TDRS SA antenna. Each return service can provide either one or two data channels from a customer spacecraft. For example, two data channels can be used to transmit real-time data and recorder playback data or real-time housekeeping data and real-time science data simultaneously.

3.2.3.2.2 SSA Return Service

Each SGLT with an assigned TDRS can provide two SSA return services. These services are time-shared by all customer spacecraft. Customer spacecraft are discriminated by frequency, antenna polarization, unique PN codes, and TDRS antenna beam pointing.

3.2.3.2.3 KSA Return Service

Each SGLT with an assigned TDRS can provide two KSA return services. These services are time-shared by all customer spacecraft. Customer spacecraft are discriminated by antenna polarization, unique PN codes, and TDRS antenna beam pointing.

3.2.3.2.4 MA Return Service

Two of the SGLTs at each Danzante and Cacique, with an assigned TDRS, can each support five MA return services simultaneously. The GRGT SGLT can support two MA return services, simultaneously. All customer spacecraft operate at the same frequency and transmitting antenna polarization, and are discriminated by unique PN codes and by TDRS antenna beam pointing.

3.2.3.3 Signal Characteristics

3.2.3.3.1 General

Table 3-4 provides a summary of TDRS SA return signal characteristics. TDRSS return signal characteristics are categorized as Data Group (DG) 1 (modes 1, 2, and 3) and DG2 signals. The DG1 modes 1, 2, and 3 (I channel) signal spreads the return service spectrum using PN codes. The DG2 and DG1 mode 3 (Q channel) signal does not use spread-spectrum techniques. The DG1 modes 1 and 2 signal is a spread-spectrum Staggered Quadriphase Pseudorandom Noise (SQPN) signal. The DG2 signal is a BPSK, Quadrature Phase Shift Key (QPSK), or Staggered Quadriphase Shift Key (SQPSK) signal. Convolutional encoding shall be used for SSA return services. SSA return service for symbol rates greater than 300 ksps must use interleaving. Convolutional encoding may be used for all KSA return services at the customer's option. Interleaving is not applicable for KSA return service.

DG1 consists of modes 1, 2, and 3. For DG1 modes 1 and 2, the return service data is modulo-2 added asynchronously to related PN codes prior to each of these PN codes BPSK modulating quadrature phases of a carrier. DG1 modes 1 and 3 require a coherent turnaround in the customer spacecraft transponder of the received forward service carrier and range channel PN code epoch. DG1 mode 2 is similar to DG1 mode 1 but uses a noncoherent carrier (a forward service is not required) with related short PN codes. For DG1 mode 3, the I channel signal characteristics are identical to those of the I channel of DG1 mode 1, and the Q channel is a nonspread-spectrum signal with the return service data directly BPSK modulating the Q channel carrier.

Table 3-4. TDRSS SA Return Service Signal Characteristics

PARAMETER	SSA DESCRIPTION	KSA DESCRIPTION
DATA GROUP 1(DG1)		
PN MODULATION		
MODE 1 AND 2	SQPN	SQPN
MODE 3, I CHANNEL	PSK, ± 90°	PSK, ± 90°
CONVOLUTIONAL ENCODING	RATE 1/2, REQUIRED FOR MODE 1, 2, AND MODE 3 I CHANNEL RATE 1/2, OR 1/3 REQUIRED FOR MODE 3 Q CHANNEL	RATE 1/2, CUSTOMER OPTION
SYMBOL INTERLEAVING	REQUIRED FOR SYMBOL RATE ≥ 300 ksps	N/A
DATA MODULATION		
MODE 1 AND 2	MODULO-2 ADDED ASYNCHRONOUSLY TO PN CODE	MODULO-2 ADDED ASYNCHRONOUSLY TO PN CODE
MODE 3		
I CHANNEL	MODULO-2 ADDED ASYNCHRONOUSLY TO PN CODE	MODULO-2 ADDED ASYNCHRONOUSLY TO PN CODE
Q CHANNEL	PSK, ± 90°	PSK, ± 90°
PN CHIP RATE	≈ 3M CHIPS/SEC	≈ 3M CHIPS/SEC
CARRIER REFERENCE		
MODE 1 AND 3 (COHERENT TURNAROUND)	$\frac{240}{221} \times FR^1$	$\frac{1600}{1469} \times FR^1$
MODE 2 (NONCOHERENT TURNAROUND)	CUSTOMER SPACECRAFT OSCILLATOR	CUSTOMER SPACECRAFT OSCILLATOR
DATA FORMAT	NRZ-L,M,S; BIPHASE-L[2]	NRZ-L,M,S; BIPHASE-L,M,S
DATA RATE		
MODE 1 TOTAL	0.1-300 kbps	1-600 kbps
I CHANNEL	0.1-150 kbps	1-300 kbps
Q CHANNEL	0.1-150 kbps	1-300 kbps
MODE 2 TOTAL	1-300 kbps	1-600 kbps
I CHANNEL	1-150 kbps	1-300 kbps
Q CHANNEL	1-150 kbps	1-300 kbps
MODE 3 TOTAL	I+Q	I+Q
I CHANNEL	0.1-150 kbps	1-300 kbps
Q CHANNEL	1 kbps-3 Mbps	1 kbps-150 Mbps
DATA GROUP 2 (DG2)		
CONVOLUTIONAL ENCODING	RATE 1/2, 1/3 (CODING REQUIRED)	RATE 1/2 (CODING OPTIONAL)

Table 3-4. TDRSS SA Return Service Signal Characteristics (Cont'd)

PARAMETER	SSA DESCRIPTION		KSA DESCRIPTION	
SYMBOL INTERLEAVING	DATA RATE ≥ 150 kbps REQUIRED FOR RATE 1/2 DATA RATE ≥ 100 kbps REQUIRED FOR RATE 1/3		N/A	
DATA MODULATION	BPSK OR QPSK		BPSK OR QPSK	
CARRIER REFERENCE COHERENT TURNAROUND	$\frac{240}{221} \times F_R$[1]		$\frac{1600}{1469} \times F_R$[1]	
NON-COHERENT TURNAROUND	CUSTOMER SPACECRAFT OSCILLATOR		CUSTOMER SPACECRAFT OSCILLATOR	
DATA FORMAT	NRZ-L,M,S		NRZ-L,M,S; BIPHASE-L,M,S	
DATA RATE	RATE 1/2	RATE 1/3	UNCODED	RATE 1/2
TOTAL	1 kbps-6 Mbps	1 kbps-4 Mbps	1 kbps-300 Mbps	1 kbps-150 Mbps
I CHANNEL	1 kbps-3 Mbps	1 kbps-2 Mbps	1 kbps-150 Mbps	1 kbps-75 Mbps
Q CHANNEL	1 kbps-3 Mbps	1 kbps-2 Mbps	1 kbps-150 Mbps	1 kbps-75 Mbps

NOTES

[1] F_R = CARRIER FREQUENCY ARRIVING AT CUSTOMER SPACECRAFT (HZ). EXCEPT DURING SCHEDULED PERIODS OF DOPPLER COMPENSATION INHIBIT, $F_R = F_O \pm E$; WHERE F_O = NOMINAL CENTER FREQUENCY OF CUSTOMER SPACECRAFT RECEIVER AND FOR SSA, $E = 70 \times \ddot{R}$, WHILE $\ddot{R} \leq 50$ m/SEC^2 AND $\dot{R} \leq 12$ km/SEC; FOR KSA, $E = 500 \times \ddot{R}$, WHILE $\ddot{R} \leq 15$ m/SEC^2 AND $\dot{R} \leq 12$ km/SEC, $\dot{R}$ AND $\ddot{R}$ ARE CUSTOMER SPACECRAFT VELOCITY AND ACCELERATION RESPECTIVELY, RELATED TO THE ASSIGNED TDRS.

[2] THE OUTPUT OF THE CONVOLUTIONAL ENCODER MAY BE NRZ TO Biφ-L CONVERTED. THIS CAPABILITY WILL ONLY BE USED WITH DATA RATES ≤ 5 Mbps.

In DG2, the return service data directly BPSK, SQPSK, or QPSK modulates the carrier. The carrier may either be coherent with the received forward service carrier or noncoherent. The type of modulation that can be used is dependent upon the following characteristics of the return service: number of data channels, channel data rates, use of convolutional encoding, use of biphase data formats, and use of the Biphase-L format conversion for the convolutional encoder output symbols. BPSK modulation can only be used for a single data channel. SQPSK modulation shall be used for a single data channel and can be used for two independent data channels. QPSK modulation can also be used for two independent data channels.

3.2.3.3.2 SSA and KSA Return Services

A customer spacecraft can use DG1 modes 1, 2, and 3, and DG2 signals depending upon the customer spacecraft return service data requirements. An SSA customer shall use convolutional encoding (rate 1/2 or rate 1/3) for all return service data. An SSA customer may use interleaving to mitigate radio frequency interference (RFI) for symbol rates greater than 300 kbps. The maximum return service data rate is 6 Mbps for DG2 SSA return service and 300 Mbps for DG2 KSA return service.

3.2.3.3.3 MA Return Service

A customer spacecraft must use convolutional encoding for all return service data and may use only DG1 modes 1 and 2 signal designs. The maximum individual customer spacecraft return service data rate for DG1 mode 1 and 2 operations is 100 kbps.

3.2.4 Shuttle-Unique Service

Table 3-5 provides a summary of Shuttle-unique TDRSS services.

Table 3-5. TDRSS Shuttle Unique Service Signal Characteristics

PARAMETER	FORWARD	RETURN
S-BAND SERVICE		
PN CHIP RATE	11.232 MCHIPS/SEC ± 0.1%	N/A
DATA MODULATION	MODULO-2 ADDED ASYNCHRONOUSLY TO PN CODE	N/A
DATA FORMAT	NRZ-L	NRZ-L
CONVOLUTIONAL ENCODING	RATE 1/3, CONSTRAINT LENGTH 7, CONVERSION TO BIPHASE-L REQUIRED	RATE 1/3, CONSTRAINT LENGTH 7, CONVERSION TO BIPHASE-L REQUIRED
CARRIER MODULATION	PSK, ± 90°	PSK, ± 90°
DATA RATE MODE 1 MODE 2	 32 kbps 72 kbps	 96 kbps 192 kbps
Ku-BAND SERVICE		
COMMAND CHANNEL		
PN MODULATION (OPTION)	PSK, ± 90°	N/A
PN CHIP RATE	≈3 MCHIPS/SEC	N/A
DATA FORMAT	NRZ	N/A
DATA MODULATION	BIPHASE-L CONVERSION REQUIRED, MODULO-2 ADDED ASYNCHRONOUSLY TO PN CODE	N/A
DATA RATE	1-216 kbps	N/A
RANGE CHANNEL	N/A	N/A
MODE 1		
CARRIER MODULATION:	N/A	QDSB
I-CHANNEL POWER Q-CHANNEL POWER	N/A	6 dB

Table 3-5. TDRSS Shuttle Unique Service Signal Characteristics (Cont'd)

PARAMETER	FORWARD	RETURN
I-CHANNEL (CHANNEL 3):		
MODULATION	N/A	PSK, ± 90°
DATA FORMAT	N/A	NRZ-L,M,S
CONVOLUTIONAL ENCODING	N/A	RATE 1/2
DATA RATE	N/A	2-50 Mbps, OR NO DATA
Q-CHANNEL:		
MODULATION	N/A	QDSB
DATA FORMAT	N/A	8.5 MHz SQUARE WAVE SUBCARRIER QPSK MODULATED WITH DATA
SUBCARRIER MODULATION:		QPSK
I-CHANNEL (SUBCARRIER) Q-CHANNEL (SUBCARRIER)	N/A	4.3 dB
I-CHANNEL (CHANNEL 2):		
DATA FORMAT	N/A	NRZ-L,M,S; ALL DATA RATES BIPHASE-L,M,S ≤ 1.024 Mbps
DATA RATE	N/A	16 kbps-2 Mbps
Q-CHANNEL (CHANNEL 1):		
DATA FORMAT	N/A	NRZ-L
CONVOLUTIONAL ENCODING	N/A	RATE 1/3, CONSTRAINT LENGTH K=7, CONVERSION TO BIPHASE-L REQUIRED
DATA RATE	N/A	192 kbps
MODE 2		
MODULATION	N/A	FM
SIGNAL FORMAT INTO FM MODULATOR	N/A	ANALOG MODULATED CARRIER AND 8.5 MHz QPSK MODULATED SUBCARRIER
CARRIER FM DEVIATION FREQUENCY	N/A	11 MHz PEAK
SUBCARRIER FM DEVIATION FREQUENCY	N/A	6 MHz PEAK

Table 3-5. TDRSS Shuttle Unique Service Signal Characteristics (Cont'd)

PARAMETER	FORWARD	RETURN
CARRIER MODULATION:		
DATA FORMAT (CHANNEL 3)	N/A	ANALOG
DATA 3 dB BANDWIDTH (CHANNEL 3)	N/A	4.2 MHz
SUBCARRIER MODULATION:		
I-CHANNEL (SUBCARRIER) Q-CHANNEL (SUBCARRIER)	N/A	4.3 dB
I-CHANNEL (CHANNEL 2):		
DATA FORMAT	N/A	NRZ-L,M,S; ALL DATA RATES BIPHASE-L,M,S ≤ 1.024 Mbps
DATA RATE	N/A	16 kbps-2 Mbps
Q-CHANNEL (CHANNEL 1):		
DATA FORMAT	N/A	NRZ-L
CONVOLUTIONAL ENCODING	N/A	RATE 1/3, CONSTRAINT LENGTH K=7, CONVERSION TO BIPHASE-L REQUIRED
DATA RATE	N/A	192 kbps

3.2.5 Tracking Services

Each SGLT with an assigned TDRS can provide both two-way range and range rate (Doppler) measurements and one-way Doppler measurements for customer spacecraft. Range measurements require use on the return service of a PN range code which is coherent with the forward service range channel PN code. Two-way Doppler measurement requires use of a carrier on the return service which is synchronized with the forward service carrier. Tracking service requires establishment of a forward service and/or a return service to a customer spacecraft using either the MA, SSA, or KSA services.

3.3 Service Operations

Figure 3-2 provides an overview of a customer's Mission Operations Center (MOC)/Data Processing Facility functional interfaces (command and telemetry) with the TDRSS and the functional operational interfaces with the Network Control Center (NCC). The NCC schedules TDRSS services, supports real-time configuration control of TDRSS services, monitors the performance of scheduled TDRSS services, and monitors the availability of TDRSS services. The NCC uses performance monitoring data to coordinate fault isolation and subsequent corrective action at all elements that support customer spacecraft related services. The customer MOC requests scheduling of TDRSS services and initiates real-time configuration change

requests to TDRSS services as a result of customer spacecraft real-time configuration changes. The Flight Dynamics Facility (FDF) supports customer spacecraft orbital determination using TDRSS tracking data.

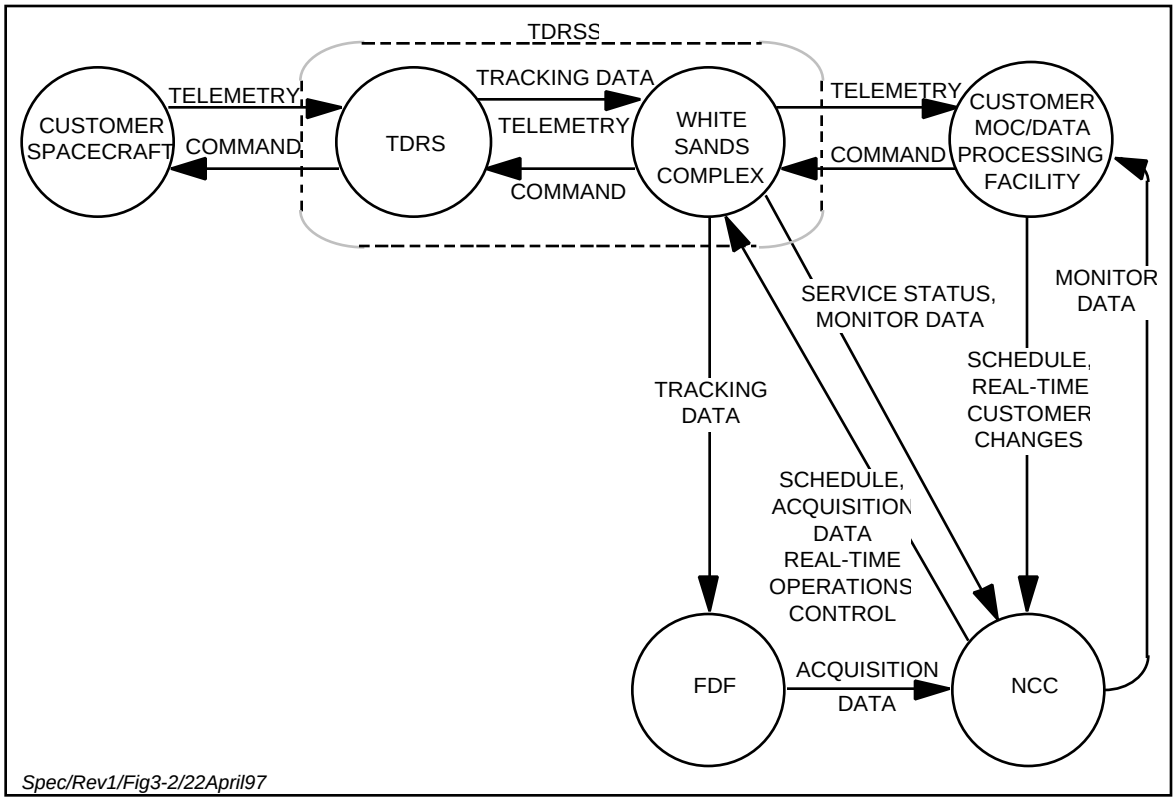

Figure 3-2. TDRSS Customer Interface Overview

3.4 TDRSS WSC Frequency Plan

Figure 3-3 provides an overview of the forward and return service frequency plan.

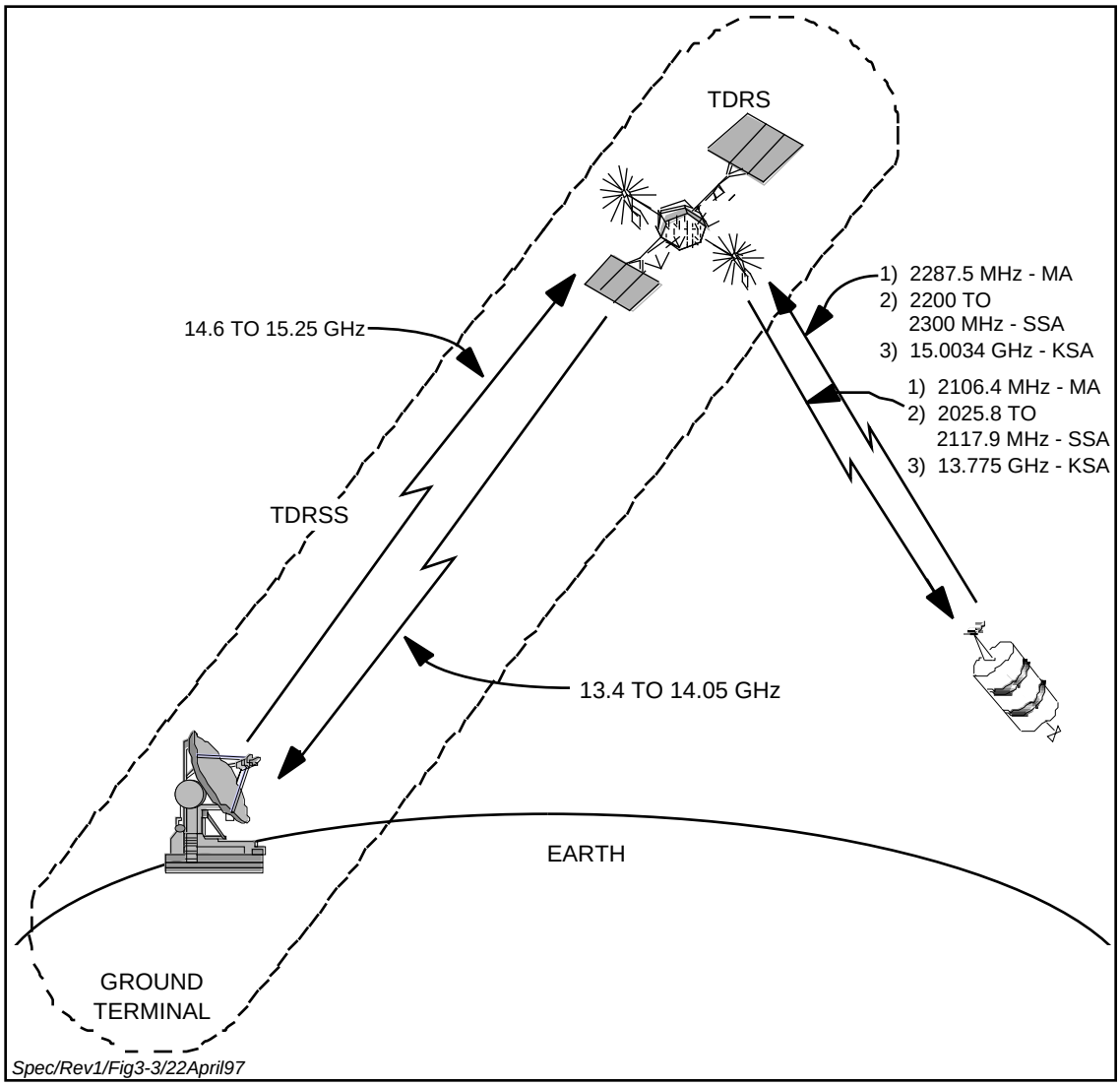

Figure 3-3. TDRSS Forward and Return Service Frequency Plan Overview

Section 4. WSC Requirements

4.1 Overview and Architecture

The WSC shall provide multiple, simultaneous services among customer spacecraft and NASA operational facilities via assigned TDRS. Each service provided by the WSC shall include receiving customer data at the common carrier interface (CCI) for RF transmission of forward link signals to the customer spacecraft via the assigned TDRS, receiving RF return link signals from the customer spacecraft via the assigned TDRS, recovering and forwarding return link data to customers via the CCI, and providing customer spacecraft tracking support services. In addition, the WSC shall ensure the integrity of the customer spacecraft/WSC communication paths, and shall monitor and maintain the health and status of the TDRS resources by performing TDRS TT&C functions. The WSC implementation and operation shall include failsoft features. The failsoft capability shall include avoidance of potential single-point failures by applying concepts such as: independent SGLTs in the WSC, hardware redundancy within the SGLT, Common Time and Frequency System (CTFS), DIS and S-band TT&C System, the operation of redundant equipment in hot-standby, timely failover to hot-standby equipment, and an architecture based on distributed data processing providing local control of subsystems.

Figure 4-1 depicts the reference architecture for the Danzante Ground Terminal, while Figure 4-2 depicts the reference architecture for the Cacique Ground Terminal and GRGT. Each ground terminal includes the following elements:

a. EachSGLT shall provide customer telecommunications services, a TDRS Ku-band TT&C capability, a TDRS S-band TT&C capability (Danzante and GRGT only), and EET equipment capable of simulating customer spacecraft for testing of end-to-end TDRSS data communications. Each SGLT shall include an integral capability for measuring the performance and monitoring the status of the SGLT during customer service and under test conditions. The SGLTs shall be capable of being operated from the TDRSS Operations Control Center (TOCC).

b. A TOCC at each Danzante and Cacique shall provide an operator-friendly environment for controlling and monitoring the operation of the SGLTs, DIS, and the S-band TDRS TT&C System.

c. An S-band TDRS TT&C System at each Danzante and Cacique to support spare TDRSs and for use in the event of a loss of TDRS Ku-band TT&C capability.

d. A CTFS to provide time and frequency references to the respective ground terminal components.

e. A Data Interface System (DIS) to provide the interface and the data handling between the SGLTs, Intrasite Communications System, S-band TDRS TT&C System (Danzante and Cacique only), common carrier communication facilities, and the other ground terminals.

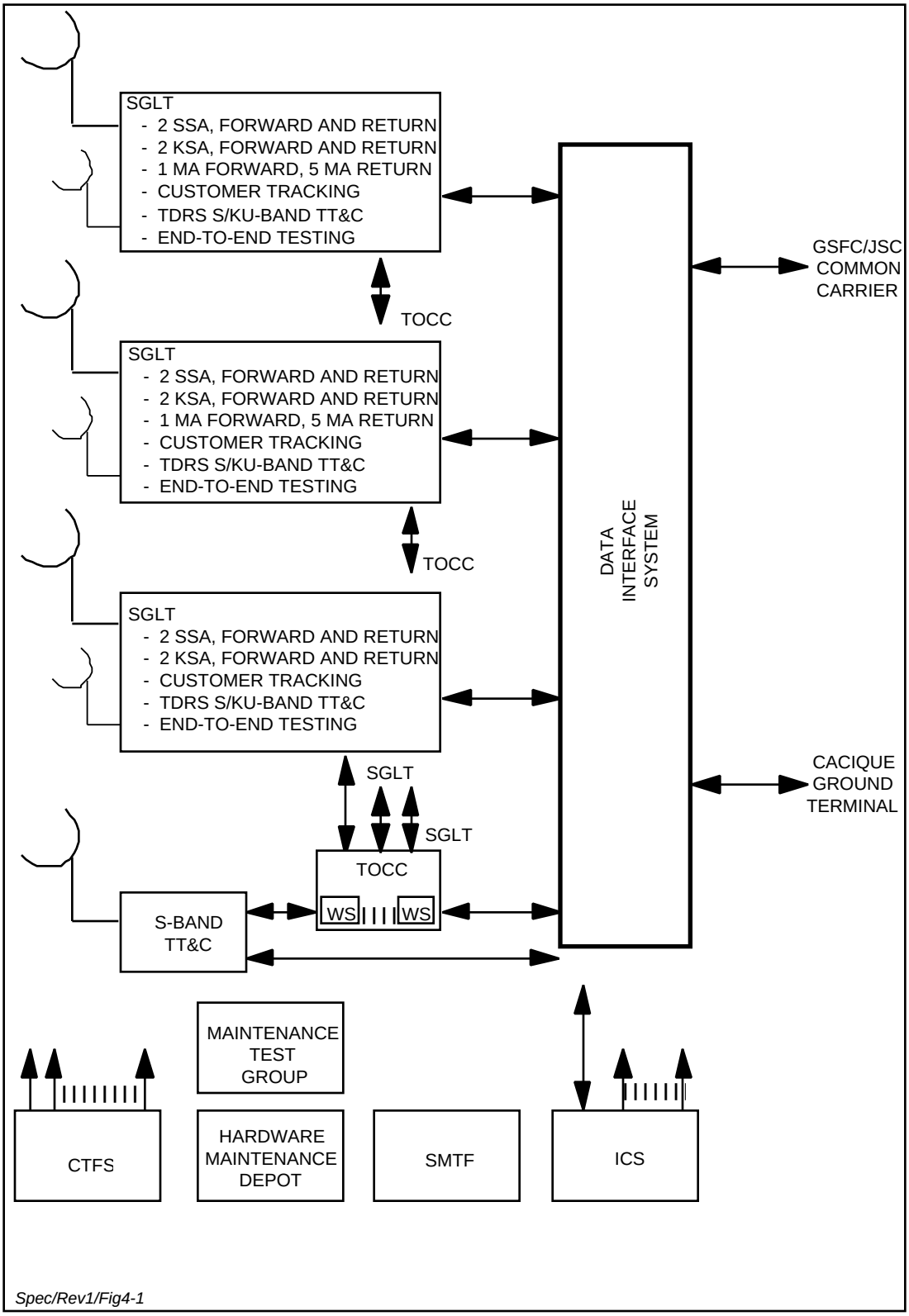

Figure 4-1. Danzante Ground Terminal Reference Architecture

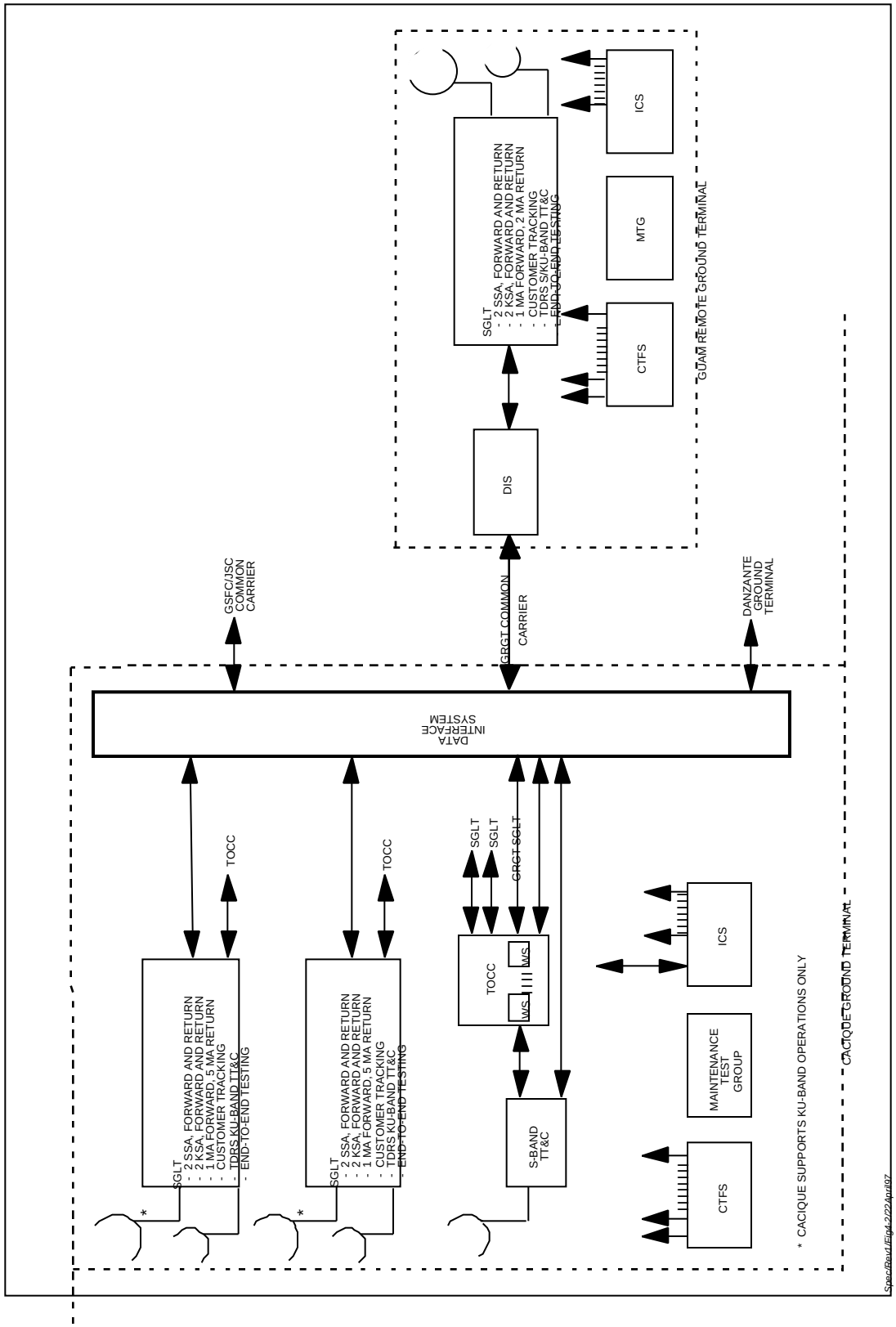

Figure 4-2. Cacique Ground Terminal/GRGT Reference Architecture

f. A Software Maintenance and Training Facility (SMTF), located at the Danzante Ground Terminal, to provide the capability for on-site development, enhancement and testing of software and for the training of operations and maintenance personnel.

g. An Intra/Intersite Communications System for operational communications.

h. A Hardware Maintenance Depot (HMD), located at the Danzante Ground Terminal, for the repair of WSC hardware.

i. A Maintenance Test Group (MTG) for support of hardware maintenance.

4.2 Functional Requirements

This section specifies, directly or by reference to other relevant sections of this Specification, the functional requirements for the elements of the WSC.

4.2.1 SGLT Functional Requirements

The SGLT functional requirements for telecommunications and TT&C operations are specified below.

4.2.1.1 Telecommunications Functional Requirements

4.2.1.1.1 SSA Forward Service (SSAF)

Each SGLT shall provide for transmitting SSAF customer data via an assigned TDRS to customer satellites. Customer forward baseband data shall be received from the DIS.

4.2.1.1.2 SSA Return Service (SSAR)

Each SGLT shall provide for Ku-band reception of customer data transmitted from a customer satellite at S-band, through an assigned TDRS. The returned data shall be received, processed, and sent to the DIS at baseband.

4.2.1.1.3 KSA Forward Service (KSAF)

Each SGLT shall provide for transmitting KSAF customer data via an assigned TDRS to customer satellites. Customer forward baseband data shall be received from the DIS.

4.2.1.1.4 KSA Return Service (KSAR)

Each SGLT shall provide for Ku-band reception of customer data transmitted from customer satellites at Ku-band, through an assigned TDRS. The returned data shall be received, processed, and sent to the DIS at baseband.

4.2.1.1.5 Multiple Access Forward (MAF) Service

Two SGLTs at each Danzante and Cacique, and the GRGT SGLT shall provide for transmitting MAF customer data via an assigned TDRS to customer satellites. Customer forward baseband data shall be received from the DIS.

4.2.1.1.6 Multiple Access Return (MAR) Service

Two SGLTs at each Danzante and Cacique, and the GRGT SGLT, shall provide for Ku-band reception of customer data transmitted from a customer satellite at S-band through an assigned TDRS. The returned data shall be received, processed, and sent to the DIS at baseband.

4.2.1.1.7 Tracking Service

The SGLT shall provide customer range measurements, one-way and two-way (coherent turnaround) Doppler measurements and time transfer measurements.

4.2.1.2 Ku-band TDRS TT&C Functional Requirements

Each SGLT shall monitor the health and status, determine orbital parameters, and control changes in the configuration of an assigned TDRS by transmission and reception of TDRS TT&C data. Each SGLT shall also perform TDRS stationkeeping, attitude control, and TDRS antenna pointing.

4.2.2 S-band TDRS TT&C System (STTCS) Functional Requirements

For contingency TDRS TT&C operations, Danzante and Cacique shall perform the functions specified in Section 4.2.1.2, except for customer service support via an S-band TT&C uplink and downlink. Danzante and Cacique shall be capable of supporting any in-view TDRS via the S-band TT&C System.

4.2.3 Data Interface System (DIS) Functional Requirements

Each WSC Ground Terminal shall provide, in the DIS, the data handling functions for interfacing with common carrier circuits for communication between the SGLTs and other NASA facilities. The DIS shall provide for data communications between Danzante and Cacique via an inter-terminal interface and between Cacique and GRGT via the GDIS.

4.2.4 TOCC Functional Requirements

The principal operating positions (workstations) for each WSC Ground Terminal shall be contained in an operations center designated as the TDRSS Operations Control Center (TOCC). Each TOCC shall contain intelligent terminals and peripherals devoted to the operation and control of each SGLT, the S-band TT&C System and the DIS.

4.2.5 Common Time and Frequency System (CTFS) Functional Requirements

The CTFS shall generate and distribute highly stable and accurate time and frequency coherent signals within each ground terminal. Redundancy shall be provided for critical equipment in the

CTFS. Battery backup shall be provided to ensure continuous operation in the event of primary power outage. The output signals shall be based on the primary reference characteristics of a high performance Cesium Beam Frequency Standard and Disciplined Oscillators.

4.2.6 End-to-End Test Functional Requirements

Each SGLT shall have an end-to-end testing capability which shall provide for receiving test spacecraft signals from a ground terminal via an assigned TDRS and for transmitting test spacecraft signals to a ground terminal via an assigned TDRS without use of an actual customer spacecraft.

4.2.7 Software Maintenance and Training Facility (SMTF) Functional Requirements

The operation of the WSC shall be supported by a single, independent Software Maintenance and Training Facility, located at the Danzante Ground Terminal. The SMTF shall provide a software development capability for software modification and enhancement and shall provide a simulated operational environment for software testing and training of operations and maintenance personnel. The SMTF shall have the capability to simulate the response of the WSC operational service equipment and of a TDRS to the extent necessary for realism and effectiveness of testing and training. The SMTF shall include software design and implementation tools, test simulators, and scenario generators and shall support performance of software data collection and analysis capability, documentation, and software configuration management functions.

4.2.8 Maintenance Test Group (MTG) Functional Requirements

Each ground terminal shall include an MTG consisting of general and special test equipment (as required) and other resources to support first level maintenance (Section 4.2.8.1) of the equipment. The MTG shall use information derived from Performance Measuring and Monitoring Subsystem (PMMS) monitoring and test functions as an aid in determining the location of a fault. The MTG shall:

a. Provide the capability for injecting test signals into off-line equipment and controlling the configuration of tests.

b. Measure the response of the equipment to the test signals at designated test points.

c. Display the results of tests in a manner which permits maintenance personnel to localize failures.

4.2.9 Hardware Maintenance Requirements

Facilities and equipment required to perform two levels of hardware maintenance shall be provided as part of the WSC.

4.2.9.1 First Level Maintenance

The first level of hardware maintenance shall include:

a. Scheduled preventive maintenance

b. Fault localization

c. Replacement of failed units (LRUs)

d. In-line testing and recalibration of repaired and replaced units

The test resources of the MTG shall be used as required for fault localization, testing, and calibration.

4.2.9.2 Second Level Maintenance

The WSC shall include a single HMD, located at the Danzante Ground Terminal, for the repair of failed units. The HMD shall be capable of restoring to serviceable condition failed units determined to be repairable. The HMD shall include test equipment, signal sources, printed circuit board testers, integrated circuit testers, test fixtures, and tools required to perform repairs to the individual piece-part level. The second level maintenance function shall be supported by a logistics program which provides a supply of spare parts for the timely repair of failed components.

4.3 Performance Requirements

This section specifies, directly and by reference to other relevant sections of this specification, the performance requirements of the WSC.

4.3.1 TDRS Support Performance

The Danzante and Cacique SGLTs shall be capable of operating with an assigned, on-orbit TDRS, with an orbital inclination not exceeding ± 7° and with a nadir longitude between 39° west longitude and 180° west longitude. The GRGT SGLT shall be capable of operating with an assigned, on-orbit TDRS, with an orbit inclination of ± 7° and with a nadir between 142° west longitude and 289° west longitude.

4.3.2 Operational Availability

In a measurement interval of 10,000 hours, the Danzante and Cacique operational availability, as defined in Section 13.4, for providing forward and return customer and S-band TT&C services, shall be not less than 0.9999. The GRGT operational availability for providing forward and return customer services shall not be less than 0.9743 and for S-band TT&C services shall not be less than 0.9996.

4.3.3 RF Performance

The Ku-band radio frequency transmission and reception performance requirements, including Ku-band antenna requirements, are specified in Section 5.2.3. The S-band radio frequency transmission and reception performance requirements for the TDRS TT&C uplink and downlink

are specified in Section 6.3. The RF interfaces shall be consistent with the requirements of STDN 220.29, TDRSS Spacecraft/Ground Segment Interface Control Document, and 405-F7-ICD-001, TDRS F-7 Interface Control Document for the TDRS Spacecraft/Ground Segment.

4.3.3.1 Frequency Allocation

The Ku-band frequencies from 13.4 GHz to 14.05 GHz have been allocated for the downlink from the TDRSs to the Ground Terminals and the frequencies from 14.6 GHz to 15.25 GHz have been allocated for the uplink from the Ground Terminals to the TDRSs. The WSC has authorization to utilize the S-band space research bands, 2023 MHz to 2118 MHz uplink and 2200 MHz to 2300 MHz downlink.

4.3.4 SGLT Service Performance Requirements

4.3.4.1 Telecommunications Performance Requirements

Performance requirements for SSA, KSA, and MA forward services are specified in Section 5.3.1.3. Performance requirements for SSA, KSA, and MA return services are specified in Section 5.3.2.3. Performance requirements for the SSA, KSA, and MA tracking services are specified in Section 5.3.3.3.

4.3.4.2 TDRS Ku-Band TT&C Performance Requirements

Section 5.4.3 specifies the performance requirements for TDRS Ku-band TT&C. The SGLT shall have the capability for controlling and maintaining the position of an assigned TDRS to within 0.1° longitude of its directed position and to within 0.1° of its directed inclination from the equatorial. TT&C performance requirements are specified in Section 5.2.3.

4.3.5 TDRS S-band TT&C Performance Requirements

The performance requirements for TDRS S-band TT&C, including stationkeeping requirements, are very similar to those specified for Ku-band TT&C. The S-band TT&C performance requirements are specified in Sections 6.2.2 and 6.3.2.

4.3.6 DIS Performance Requirements

The performance requirements for the DIS, including switching, control, multiplexing/ demultiplexing, data buffering, storage, and quality monitoring, are specified in Section 8.3.

4.3.7 TOCC Performance Requirements

The performance requirements of the TOCC are specified in Section 9.3.

4.3.8 CTFS Performance Requirements

The frequency standards provided by the CTFS shall be maintained to within one part in ten to the twelfth power. Time shall be maintained to within 5 microseconds of time relative to the US Naval Observatory (USNO) master clock by utilizing WWVB (Danzante and Cacique only),

LORAN-C (Danzante and Cacique only), and Global Positioning Satellite (GPS) radio signals. Additional performance requirements of the CTFS are specified in Section 7.

4.3.9 End-to-End Test Performance Requirements

The performance requirements for the EET capability are specified in Section 5.7.3.

4.3.10 Maintenance Performance Requirements

WSC maintenance shall be performed such that the mean time to repair (MTTR) all equipment, except the Antenna Subsystem, shall not exceed 30 minutes as specified in Section 13.2.

4.4 Interface Requirements

The external interfaces of the WSC are depicted in Figure 1-1.

4.4.1 WSC-TDRS Interface Requirements

The interface between the WSC and a TDRS for telecommunications services and TT&C support shall be in accordance with the RF interface requirements defined in STDN 220.29 and 405-F7-ICD-001. The WSC-TDRS interface requirements are specified in the following sections:

a. Antenna Subsystem - Section 5.2.4.

b. Customer forward equipment - Section 5.3.1.4.

c. Customer return equipment - Section 5.3.2.4.

d. Customer tracking equipment - Section 5.3.3.4.

e. Ku-band TT&C equipment - Section 5.4.4.

f. S-band TT&C equipment - Sections 6.2.3 and 6.3.3.

4.4.2 WSC-Common Carrier Interface Requirements

The WSC interface with the common carrier telecommunications facilities shall be in accordance with the requirements specified in Section 8.4.3.1 and in STDN 220.30, Interface Control Document (ICD) Between the Second TDRSS Ground Terminal (STGT) and Ground Communications Facilities and 530-ICD-GRGT-GCF, Interface Control Document (ICD) between the Guam Remote Ground Terminal (GRGT) and the Ground Communications Facility (GCF).

4.4.3 Danzante-Cacique Interface Requirements

The DIS shall provide the interface for a dedicated, multichannel communication link between the Danzante and the Cacique Ground Terminals. The requirements for the Danzante-Cacique Ground Terminal interface are specified in Section 8.4.3.2.

4.4.4 Cacique-GRGT Interface Requirements

The DIS shall provide the interface for a dedicated, multichannel communication link between the Cacique and the GRGT. The requirements for the Cacique-GRGT interface are specified in Section 8.

4.5 Operations

This section specifies the WSC operations requirements, modes of operation, operational support concept, and security of operations.

4.5.1 Operations Requirements

The WSC shall operate as an integrated and self-contained facility and shall meet the operational availability requirements specified in Section 13.4. The key requirements of WSC operations are:

a. The WSC shall operate year-round, 24 hours a day.

b. The SGLT(s) within each Ground Terminal shall operate independently of each other and under the control of the NCC during the provision of TDRSS customer services support.

c. The TOCC at each Danzante and Cacique shall serve as the local control and monitor center for the respective Ground Terminal, including control of the SGLTs, the DIS, and the S-band TT&C System. The Cacique TOCC shall also serve as the control and monitor center for the GRGT, including the SGLT and GDIS.

d. The DIS at each Danzante and Cacique shall operate under NCC control as an independent system serving all SGLTs in the respective Ground Terminal, and shall serve as the interface with other NASA operating elements. The Cacique DIS shall support the GRGT.

e. In the normal mode of operation (described in Section 4.5.2), the NCC will perform WSC control functions automatically. When the normal mode of operation cannot be sustained, each Ground Terminal operations control shall be performed at the TOCC or at local control consoles by the intervention of operations personnel who shall use voice communications with the NCC, FDF, and customer MOCCs as appropriate.

f. The S-band TT&C System (Danzante and Cacique only), MTG, CTFS, SMTF (Danzante only), and HMD (Danzante only) shall be operated as independent systems/functions.

4.5.2 Modes of Operation

Each ground terminal shall have the capability to operate (i.e., provide customer support) in three modes: a normal mode, a TOCC control mode, and a local control mode.

a. In the normal mode of operation the Ground Terminal is configured and controlled for customer support automatically, in response to messages received from the NCC as

specified in 530-ICD-NCC-FDF/WSC, Interface Control Document (ICD) between the Network Control Center (NCC)/Flight Dynamics Facility (FDF) and the White Sands Complex (WSC). This automatic configuration and control is accomplished by SGLT and DIS ADPE (Automatic Data Processing Equipment) subsystems. In the normal mode of operation, the TOCC monitors operations.

b. In the TOCC control mode, communication with the NCC is assumed to be by voice only. The information from the NCC for configuration and control of the Ground Terminals must be entered at the TOCC workstations. The TOCC shall provide capabilities for facilitating the entry and display of this information and for control of the ground terminal(s) to provide customer support.

c. The local control mode assumes that the TOCC entry and control described in Item b. is not available for one or more of the ADPE Subsystems. The following functions shall be performed at Man-Machine Interface (MMI) devices directly linked to SGLT, S-TT&C (Danzante and Cacique only), and DIS ADPE subsystems (Danzante and Cacique only) for which TOCC entry and control is not available. These MMIs shall be referred to as local MMI.

   1. Configure and provide customer and TDRS support as specified in the requirements for each system/subsystem. The functions supported by each system/subsystem are described in Sections 5.6.2.2.7 (for Executive ADPE), 5.6.3.2.9 (for USS ADPE), 5.6.4.2.36 (for K-band TT&C ADPE), 6.4.1j (for S-band TT&C ADPE), and 8.5.11 (for DIS ADPE).

   2. Perform pre-service and post-maintenance and other testing except for Shuttle pre-service testing.

   3. Support delog of SGLT, DIS (Danzante and Cacique only), and TDRS status and performance data logged and/or archived by the system/subsystem ADPE.

   4. Support ongoing customer services.

   5. Support initiation of operations messages as specified in the requirements for each subsystem. The timeline requirements in 530-ICD-NCC-FDF/WSC for completing operations orders shall not apply.

   6. Failover to redundant equipment to maintain customer service.

   7. Monitor and support of operations.

4.5.3 Operational Support

The WSC shall be capable of providing operational support consistent with the operations requirements and modes of operation to ensure meeting the specified operational availability. Operational support includes activities associated with WSC system and subsystem monitoring, status reporting, logging/archiving/delogging, fault detection, fault isolation, maintenance, and logistics support. WSC operational support shall include:

a. Provision of performance measuring and monitoring to:

   1. Verify operational readiness to support customer service prior to the start of a scheduled service.

   2. Verify operational readiness of WSC equipment after completion of maintenance.

   3. Monitor equipment status and the quality of WSC customer service support during service, including RF spectrum monitoring.

   4. Perform WSC customer service characterization.

   5. Support fault detection and fault isolation to the LRU level.

b. The application of BIT/BITE in the WSC equipment wherever beneficial.

c. The provision of test equipment and test procedures to support WSC maintenance.

d. The use of the SMTF, the HMD and logistics support to provide software and hardware maintenance.

e. Logging/Archiving/Delogging to support WSC operational anomaly analysis and management of WSC operations.

4.5.4 Security Aspects of Operations

The WSC shall be operated in conformance with current security requirements governing NASA Space Network operations. To ensure the required level of protection is achieved and maintained, the WSC shall meet the security requirements as specified in Section 20.

Section 5. SGLT Requirements

5.1 SGLT Requirements

5.1.1 Overview and Architecture

The SGLT shall include the hardware and software required to provide failsoft telecommunications and tracking support for SN customer satellites, via an assigned TDRS, and TT&C functions for that TDRS. Each SGLT shall include the subsystems identified below. Figure 5-1 depicts the reference architecture for the SGLT.

a. An Antenna Subsystem (AS) which includes a steerable transmitting and receiving dual S-band and Ku-band antenna (Cacique supports Ku-band TT&C operations only) with associated drive motors, controls, and microwave components; a switching and waveguide network to connect the SGLT antenna subsystem to the SGLT service chains; local motor drive and manual steering control; and low noise amplifiers (LNAs). The Ku-band LNAs shall be one-for-two redundant and the S-band LNAs (Danzante and GRGT only) shall be one-for-one redundant. Selective redundancy shall be provided for other components to meet the allocated reliability of the Antenna Subsystem.

b. Two SGLTs at each Danzante and Cacique, and the GRGT SGLT shall have User Service Subsystems (USS) which include all the equipment for providing SA and MA forward and return customer communication and tracking services. The third SGLT at Danzante shall have a USS which includes all the equipment for providing SA forward and return customer communication and tracking services.

c. A Tracking, Telemetry and Command Subsystem (TTCS) which operates at either Ku-band or S-band with an assigned TDRS (Cacique supports Ku-band operations only). The TTCS shall be one-for-one redundant.

d. A Performance Measuring and Monitoring Subsystem (PMMS) which shall include the equipment to determine the performance and readiness of a customer service chain. The PMMS shall be capable of supporting four SA forward and return service chains and an MA forward and return service chain, simultaneously and independently. The PMMS shall have one-for-one redundancy for the equipment related to the service chains, except switches.

e. A Control and Display Computer Network (CDCN) which shall control the operation of the SGLT equipment in automatic, TOCC, and local control modes. The CDCN shall be a distributed processing and control network with dedicated automatic data processing equipments (ADPE Subsystems) for each of the four customer service forward and return chain pairs. Similarly, separate ADPEs shall each be dedicated to the TTCS and PMMS. An Executive ADPE Subsystem shall control and coordinate the functions of the network. Each ADPE subsystem shall be provided with one-for-one redundancy. The ADPE subsystems and operator control workstations located in the

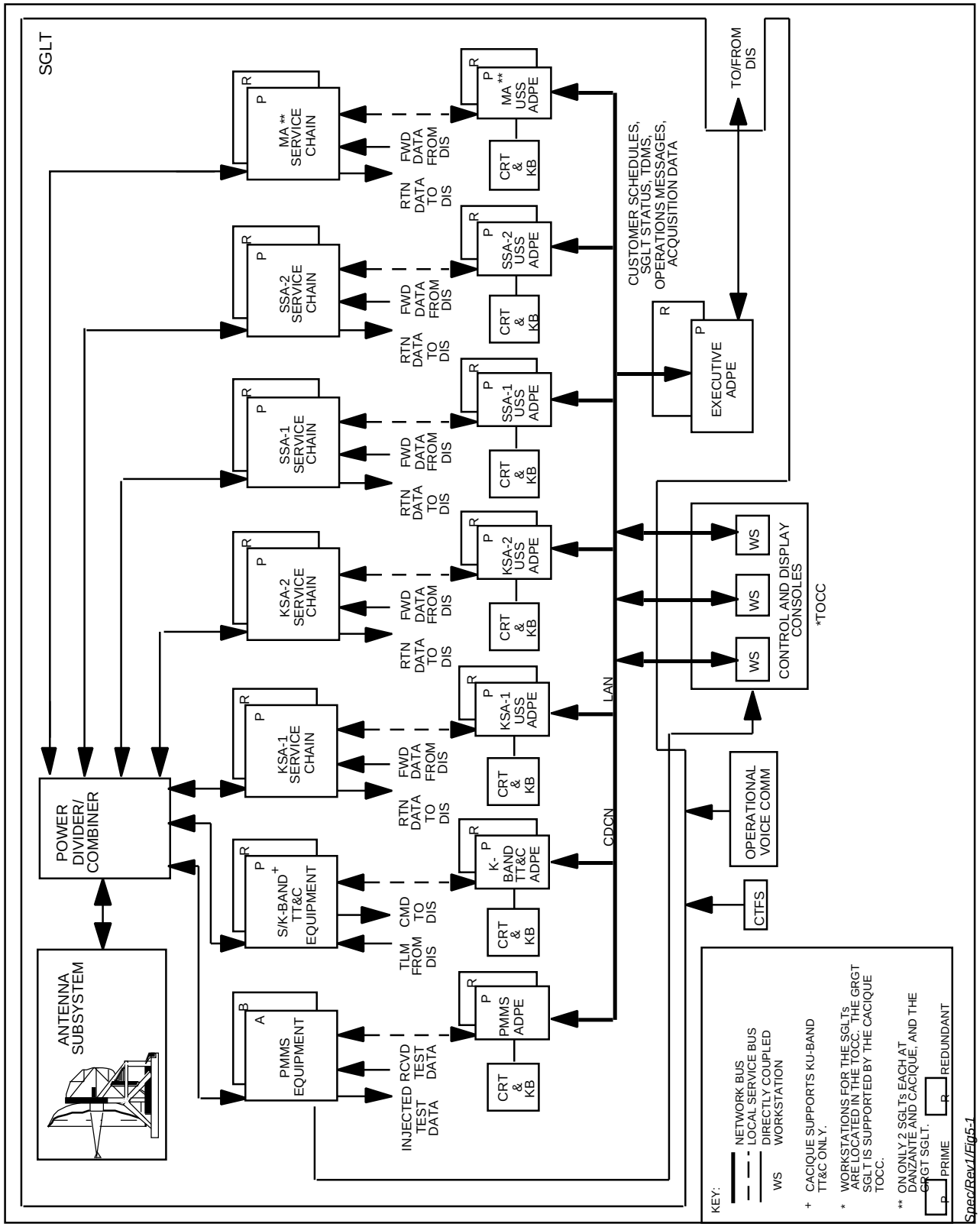

Figure 5-1. SGLT Reference Architecture

TOCC shall be interconnected by primary and redundant local area networks (LANs). The Cacique primary and redundant LANs shall be extended to the GRGT SGLT ADPE. The ADPE Subsystems for the USS, TTCS, and PMMS shall be capable of operating the respective subsystems of the SGLT in a stand-alone mode, using local databases. The TOCC shall include redundant workstations required to meet the operational availability as defined in Section 13.4.

f. An EET capability which supports testing of end-to-end TDRSS data communications between the customer MOC and customer spacecraft without the use of an actual customer spacecraft.

Each SGLT shall be capable of simultaneously providing four single access (SA) forward and return customer communications services and corresponding tracking services. Two SGLTs at each Danzante and Cacique shall each be capable of simultaneously providing one MA forward and five MA return customer communications services and corresponding tracking services. The GRGT SGLT shall be capable of simultaneously providing one MA forward and two MA return customer communications service and corresponding services. An MA capability shall not be provided for the third SGLT at Danzante. Any requirements within this Specification pertaining to an MA capability shall not be applicable to the third SGLT at Danzante. The capability shall be provided to support one EET service in lieu of one customer service.

The four single access forward and return equipment chains of the USS shall be independent of each other. The two SSA forward service chains shall be identical in equipment and functional, performance, and operational capabilities. The two SSA return service chains shall likewise be identical. The two KSA forward service chains shall be identical in equipment and functional, performance, and operational capabilities. The two KSA return service chains shall likewise be identical. The redundant service chains shall be identical to the corresponding prime service chains. There shall be an independent prime and redundant service chain for each of the four single access forward and return services.

The MA forward and return equipment chains of the USS shall be independent of each other and the four single access forward and return equipment chains. The redundant MA forward service chain shall be identical to the corresponding prime MA forward service chain. The MA return service chains shall be identical in equipment and functional, performance, and operational capabilities.

5.1.2 SGLT Functional Requirements

The SGLT subsystem functional requirements are specified below.

a. Antenna Subsystem. The antenna subsystem shall:

   1. Receive and amplify dual polarization, return customer service signals and TDRS telemetry/ranging RF signals.

   2. Acquire and track an assigned TDRS.

   3. Adjust the polarization orientation to match the TDRS transmitted signal.

4. Transmit forward customer service signals, TDRS command/ranging signals, and an RF pilot signal to the TDRS.

5. Receive control commands from CDCN, monitor performance, and report status to CDCN.

b. User Services Subsystem (USS). For the customer service capabilities defined in Table 5-1, the USS shall support:

1. Forward Services. Process data received from the DIS and transmit to the customer spacecraft, via an assigned TDRS.

2. Return Services. Process to baseband the received customer spacecraft originated data (e.g., customer spacecraft telemetry, payload data, video) via the assigned TDRS, and deliver that data to the DIS.

3. SSA/MA Cross Support Services. Two simultaneous cross support communications services shall be provided. The configuration of two simultaneous cross support services shall be:

a. a MAF and an SSAR 1 or SSAR 2 service to a customer, and an SSAF 1 or SSAF 2 and a MAR service to a customer or

b. an SSAF 1 and a MAR service to a customer, and an SSAF 2 and a MAR service to a customer.

4. Tracking Services. Provide measurements of range, time transfer and one-way or two-way Doppler.

5. Receiving control commands from the CDCN, monitoring USS performance and reporting status to CDCN.

Table 5-1. SGLT Customer Service Capabilities

CUSTOMER SERVICE	SERVICE FUNCTION	SERVICE TYPE	SERVICES PER SGLT
FORWARD	DATA RELAY TO CUSTOMER SPACECRAFT	S-BAND SINGLE ACCESS (SSAF)	2 (SSA-1F, SSA-2F)
FORWARD	DATA RELAY TO CUSTOMER SPACECRAFT	K-BAND SINGLE ACCESS (KSAF)	2 (KSA-1F, KSA-2F)
FORWARD	DATA RELAY TO SHUTTLE	S-BAND SHUTTLE (SSHF)	2[1]
FORWARD	DATA RELAY TO SHUTTLE	K-BAND SHUTTLE (KSHF)	2[2]
FORWARD	DATA RELAY TO CUSTOMER SPACECRAFT	S-BAND MULTIPLE ACCESS (MAF)	1[3]

Table 5-1. SGLT Customer Service Capabilities (Continued)

CUSTOMER SERVICE	SERVICE FUNCTION	SERVICE TYPE	SERVICES PER SGLT
RETURN	DATA RELAY FROM CUSTOMER SPACECRAFT	S-BAND SINGLE ACCESS (SSAR)	2 (SSA-1R, SSA-2R)
RETURN	DATA RELAY FROM CUSTOMER SPACECRAFT	K-BAND SINGLE ACCESS (KSAR)	2 (KSA-1R, KSA-2R)
RETURN	DATA RELAY FROM SHUTTLE	S-BAND SHUTTLE (SSHR)	2[1]
RETURN	DATA/T.V. RELAY FROM SHUTTLE	K-BAND SHUTTLE (KSHR)	2[2]
RETURN	DATA RELAY FROM CUSTOMER SPACECRAFT	S-BAND MULTIPLE ACCESS (MAR)	5[3,5]
TRACKING	CUSTOMER SPACECRAFT RANGE	TWO-WAY (COHERENT)	5[3] (2 SSA, 2 KSA, 1 MA)
TRACKING	TIME TRANSFER	TWO-WAY (COHERENT)	5[3] (2 SSA, 2 KSA, 1 MA)
TRACKING	CUSTOMER SPACECRAFT DOPPLER	ONE-WAY (NONCOHERENT)	9[3,4,6] (2 SSA, 2 KSA, 5 MA)
		TWO-WAY (COHERENT)	5[3] (2 SSA, 2 KSA, 1 MA)

NOTES

[1]EACH S-BAND SHUTTLE SERVICE SHALL BE IN LIEU OF A NORMAL SSA SERVICE.

[2]EACH K-BAND SHUTTLE SERVICE SHALL BE IN LIEU OF A NORMAL KSA SERVICE.

[3]S-BAND MULTIPLE ACCESS SERVICES SHALL BE PROVIDED ON ONLY TWO SGLTs EACH AT CACIQUE AND DANZANTE, AND THE GRGT SGLT.

[4]WHEN AN MA TWO-WAY DOPPLER TRACKING SERVICE IS SCHEDULED, ONLY FOUR ONE-WAY MA SERVICES AT EACH DANZANTE AND CACIQUE, OR ONE ONE-WAY MA SERVICE AT GRGT SHALL BE AVAILABLE.

[5]THE INITIAL CAPABILITY FOR THE GRGT SGLT SHALL BE TWO MA RETURN SERVICES WITH PROVISION FOR EXPANDABILITY TO FIVE MA RETURN SERVICES.

[6]THE NUMBER OF ONE-WAY DOPPLER TRACKING SERVICES FOR THE GRGT SGLT IS SIX (2 SSA, 2 KSA, 2 MA).

c. Ku-band Tracking, Telemetry, and Command Subsystem (TTCS). For an assigned TDRS, the SGLT TTCS shall:

1. Maintain the health and welfare of an assigned TDRS by stationkeeping operations, attitude control, and spacecraft and payload configuration management.
2. Support control of TDRS space-ground link antenna pointing.
3. Support control of SGLT antenna pointing and polarization.
4. Support command of TDRS SA antenna pointing, forward link EIRP, frequency tuning, and SA antenna polarization.
5. Perform baseband-to-RF command signal processing.
6. Perform RF-to-baseband telemetry signal processing.
7. Generate and transmit pilot signal.
8. Receive control commands from the CDCN, monitor performance, and report status to the CDCN.

d. Performance Measuring and Monitoring Subsystem (PMMS). The PMMS shall:

1. Test forward and return USS services chain performance and readiness.
2. Inject and extract test signals at both baseband and RF.
3. Receive control commands from the CDCN, monitor performance, and report status to CDCN.
4. Support first level maintenance of the Ground Terminal.
5. Support USS service chains in the warm-standby mode.
6. Provide fault detection apriori information and other appropriate information for the MTG.
7. Support monitoring of IF and RF spectra.
8. Support measurement of SGLT transit delay for range zero set and for return data delay.

e. Control and Display Computer Network (CDCN). The CDCN shall:

1. Perform the necessary processing and control the antenna subsystem, USS, TTCS, and PMMS configurations and operations in response to the schedule of customer services supplied by the NCC.
2. Receive customer spacecraft tracking data measurements and time transfer measurements from the USS, format them into the Tracking Data Messages (TDMs) and Time Transfer Messages (TTMs) and provide them to the DIS.
3. Format USS status messages and customer operations messages for relay to the NCC via the DIS.
4. Support TDRS operations by generating commands for stationkeeping, attitude control, and spacecraft and payload control.

5. Process and display TDRS telemetry to monitor TDRS status and performance.
6. Perform TDRS orbit determination calculations.
7. Provide for logging and delogging of TDRS commands, TDRS command echoes, TDRS telemetry, customer service performance, and equipment status.
8. Manage SGLT failover.

f. End-to-End Test (EET) capability. The EET shall:

1. Receive, amplify and process to baseband the simulated forward customer signal.
2. Process and transmit the simulated return customer signal to the TDRS.
3. Provide for routing of simulated customer signals to/from the DIS (Danzante and Cacique only).
4. Receive control commands from the CDCN, monitor EET performance, and report status to the CDCN.

5.1.3 SGLT Performance Requirements

The SGLT performance requirements are as follows.

5.1.3.1 Antenna Subsystem Performance Requirements

The RF and tracking performance requirements of the antenna subsystem are specified in Section 5.2.3.

5.1.3.2 USS Performance Requirements

The performance requirements for the USS are specified in the following sections.

a. SSA, KSA, and MA Forward Service - Section 5.3.1.3.
b. SSA, KSA, and MA Return Service - Section 5.3.2.3.
c. USS Tracking Service - Section 5.3.3.3.

5.1.3.2.1 Forward Services

The effective isotropic radiated power (EIRP), RF bandpass characteristics, RF and modulation distortion limits, and phase noise limits for SSA, KSA, and MA forward services are specified in Section 5.2.3 and Section 5.3.1.3.

5.1.3.2.2 Return Services

The antenna subsystem gain-to-noise temperature (G/T) ratio, probability of error (P_E) as a function of carrier-to-noise ratio spectral density (C/N_o), time to acquire the return signal, bandpass characteristics, RF and baseband distortion limits, and phase noise limits for the SSA, KSA, and MA return services are specified in Sections 5.2.3 and 5.3.2.3.

5.1.3.2.3 Tracking Services

The range and Doppler measurement error requirements, are specified in Section 5.3.3.3. Short term frequency stability and phase noise performance of the Common Time and Frequency Standard (CTFS), which impact the accuracy of range and Doppler measurements, are specified in Section 7.3.

5.1.3.3 TDRS Tracking, Telemetry and Command

The performance requirements for the TTCS are specified in Section 5.4.3 in terms of modulation parameters and RF performance for the command, ranging and pilot signals transmitted from the SGLT to the TDRS. In addition, telemetry and ranging signals transmitted from the TDRS to the SGLT are specified in terms of the RF parameters, demodulated telemetry subcarrier and range tone signal-to-noise ratios, and telemetry data bit P_E.

5.1.3.4 PMMS Performance Requirements

The performance requirements for the PMMS are specified in Section 5.5.3.

5.1.3.5 CDCN Performance Requirements

The performance requirements for the CDCN are specified in Section 5.6.

5.1.4 Interface Requirements

Each SGLT shall interface with the CTFS and the DIS. Each SGLT shall also interface with an assigned TDRS.

5.1.4.1 SGLT - CTFS Interfaces

Each SGLT shall interface with the CTFS to receive frequency and time standards distributed by the CTFS.

5.1.4.2 SGLT - DIS Interfaces

Each SGLT shall have the following interfaces with the DIS:

a. USS - DIS Interfaces. Each SGLT shall have interfaces with the DIS for the following signals:

   1. Customer data and clock for SSA, KSA, and MA return services.

   2. Shuttle Ku-band return video and analog (Danzante and Cacique only) signals.

   3. Customer data and clock for SSA, KSA, and MA forward service.

b. CDCN - DIS Interfaces. Each SGLT shall have CDCN interfaces with the DIS for the receipt of customer service schedules and acquisition data from the NCC and delivery of equipment status, Operations Data Messages (ODMs), Operations Messages (OPMs), and schedule acknowledgments to the NCC, and TDMs to the FDF, JSC and the Local Interface (LI).

c. TTCS - DIS Interfaces. Each SGLT shall have an interface between the TTCS and the DIS for:

   1. TDRS command data transmitted to a remote ground tracking station.

   2. TDRS telemetry data received from a remote ground tracking station.

5.1.4.3 SGLT-TDRS Interfaces

Each SGLT shall interface with an assigned TDRS.

a. The RF and data characteristics for forward (uplink) services and for return (downlink) services at the SGLT-TDRS interface are specified in Section 5.3. The TDRS telemetry, command and range signal characteristics are specified in Section 5.4.

b. The SGLT-TDRS interface is described in STDN 220.29 and 405-F7-ICD-001.

5.1.5 SGLT Operations

This section specifies the SGLT operations requirements, modes of operation and operational support.

5.1.5.1 Operations Requirements

The SGLT shall operate as an integral part of the WSC Ground Terminals to meet the specified Ground Terminal operational availability requirement specified in Section 13.4 for each of its forward and return SSA, KSA, and MA telecommunications support services. The key features of SGLT operations are:

a. The SGLT shall receive schedule and operations messages from the NCC and shall report SGLT status and performance to the NCC in accordance with 530-ICD-NCC-FDF/WSC.

b. SGLT Ku-band TT&C operational control of the TDRS shall be independent of USS operational control, e.g., a failure in the USS shall not have any impact on SGLT capability to control a TDRS.

c. In the normal mode of operation, the CDCN shall automatically control SGLT operations. When the normal mode of operation cannot be sustained, SGLT operations control shall be performed at the TOCC. In the event that operations control cannot be sustained by the TOCC, operations shall be performed at local control consoles by the intervention of WSC operations personnel.

d. In the case of TDRS Emergency Time Out (ETO), the S-band portion of the dual band antenna (Danzante and GRGT only) or the S-band TT&C (Danzante and Cacique only) shall provide TDRS TT&C acquisition support.

e. The provision of USS pre-service readiness testing, during-service measuring and monitoring, and post-maintenance validation testing by the PMMS.

f. The provision of failsoft features using hardware redundancy with failover initiated automatically or by TOCC operators.

5.1.5.2 Modes of Operation

5.1.5.2.1 Normal Mode

In the normal mode of operation, each SGLT independently shall:

a. Under control of the USS ADPE subsystem, automatically configure for and provide real-time processing (e.g., Doppler compensation) for the operation of forward, return, and tracking services in response to schedule and operations messages from the NCC.

b. Under control of the Ku-band TT&C ADPE subsystem, automatically configure and provide TDRS support in accordance with schedule and operations messages from the NCC.

c. Under control of the PMMS ADPE subsystem, configure for and conduct pre-service, post-maintenance, and other testing and monitoring.

d. Automatically report SGLT and TDRS status and performance to NCC.

e. Log, archive, and delog SGLT and TDRS status and performance.

f. Monitor the support operations from the TOCC workstations.

g. Maintain continuity of service by failover to redundant equipment, either automatically or under control of the TOCC operator.

5.1.5.2.2 TOCC Control Mode

In the TOCC mode of operation, the control of the SGLT shall be assumed by the SGLT operators in the TOCC as a result of operator intervention. Assumption of control of the SGLT by TOCC operators shall be at the discretion of the operator, subject to established operational procedures. In the TOCC operating mode, the SGLT shall, under the control of the operators:

a. Be configured for and provide customer and TDRS support.

b. Perform pre-service and post-maintenance and other testing.

c. Log, archive, and delog SGLT and TDRS status and performance.

d. Receive schedule and operations orders from NCC or MOC by voice or other available communications media.

e. Monitor the support operations from the TOCC workstations.

f. Maintain continuity of service by failover to redundant equipment.

5.1.5.2.3 Local Control Mode

The local control mode shall be invoked in the event of a SGLT failure which makes TOCC control and monitoring ineffective. In the local control mode, the SGLT operators shall control and monitor the individual SGLT subsystems from the consoles of the respective ADPE subsystems. The SGLT shall perform the operations specified in Section 4.5.2.c.

5.1.5.3 Operations Support Concept

The operation of the SGLT shall be supported by:

a. Performance measuring and monitoring operations performed by the PMMS, the Performance Measuring and Monitoring (PMM) ADPE Subsystem, and the PMMS workstation in the TOCC. Pre-service testing to support up to four forward and up to four return SA service chains simultaneously is required. Pre-service testing shall be accomplished during the three-minute interservice period on a customer priority, resources-available basis. For all PMMS functions which compete for the same PMMS resources, the priority for use shall be established by the PMMS operator at the PMMS workstation in the TOCC.

b. The SGLT portion of the MTG, including BIT/BITE capability within the SGLT Subsystem, shall contribute to meeting the specified operational availability.

5.2 Antenna Subsystem (AS)

5.2.1 Overview and Architecture

This section provides an overview and architecture of the dual S-band and Ku-band SGLT Antenna Subsystem. Throughout this document, the dual S-band and Ku-band SGLT antenna will be referred to as the "dual band SGLT antenna" with any exceptions being specified. The Cacique SGLT Antenna Subsystem is required to comply with the Ku-band requirements only.

5.2.1.1 Overview

The Antenna Subsystem shall support the space/ground link (SGL) between the SGLT and the assigned TDRS by providing the following capabilities:

a. Transmission of forward customer service signals to TDRS.

b. Transmission of TDRS command and range uplink to TDRS.

c. Transmission of pilot signal to TDRS.

d. Reception and amplification of return customer service signals from TDRS.

e. Reception and amplification for TDRS telemetry and range downlink from TDRS.

The SGL RF interface shall be as specified in STDN 220.29 and 405-F7-ICD-001. Functional, performance, interface, and operational requirements are specified in Sections 5.2.2, 5.2.3, 5.2.4, and 5.2.5, respectively.

5.2.1.2 Architecture

Figure 5-2 is the Antenna Subsystem reference architecture for a dual band SGLT antenna. Figure 5-3 is the Antenna Subsystem reference architecture for a Ku-band antenna. The following architectural requirements shall apply:

a. There shall be one-for-two redundancy of the Ku-band LNAs and one-for-one redundancy of the S-band LNAs (Danzante and GRGT only) in the receive Antenna Subsystem equipment chain.

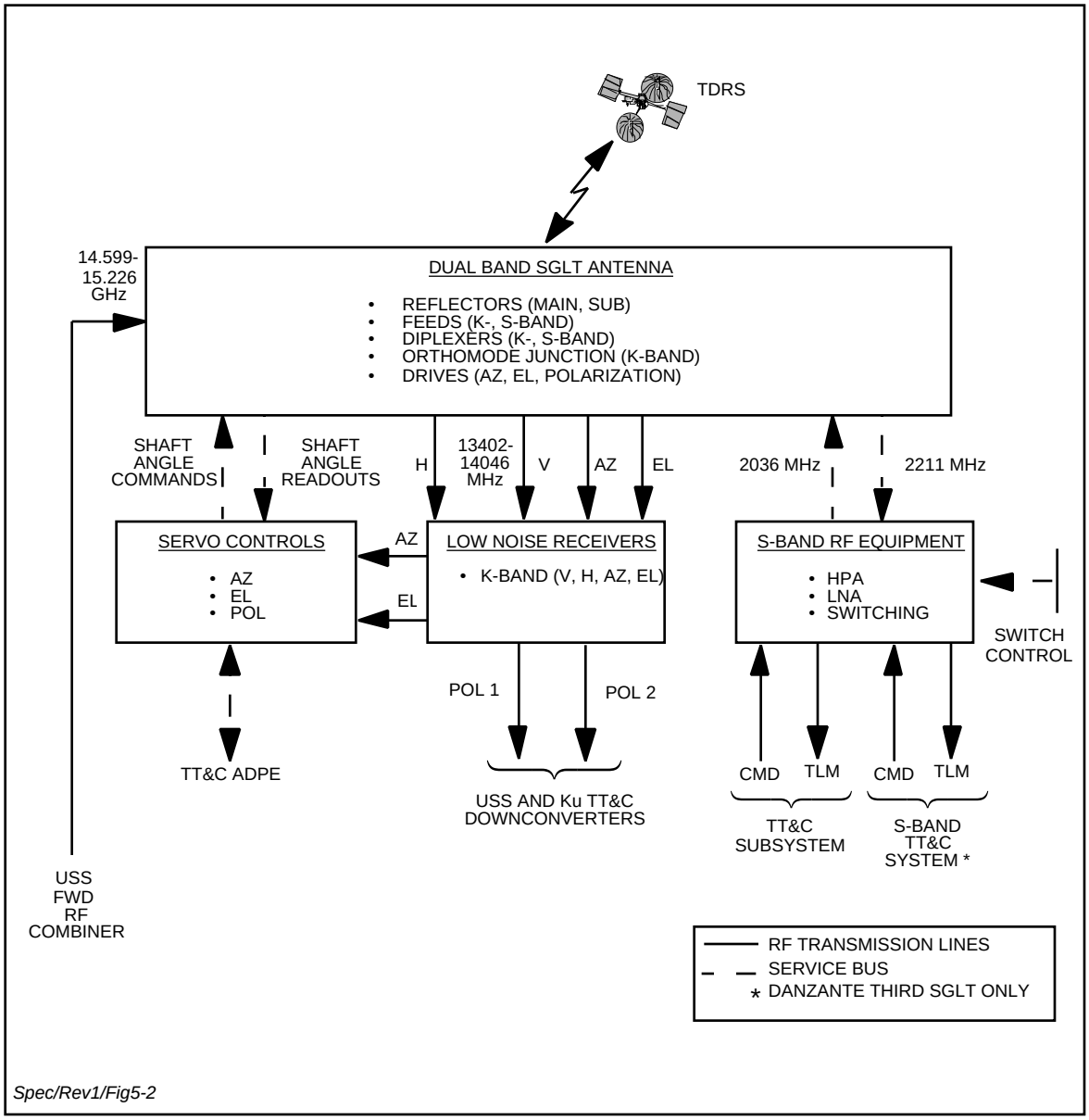

Figure 5-2. Dual-Band SGLT Antenna Reference Architecture

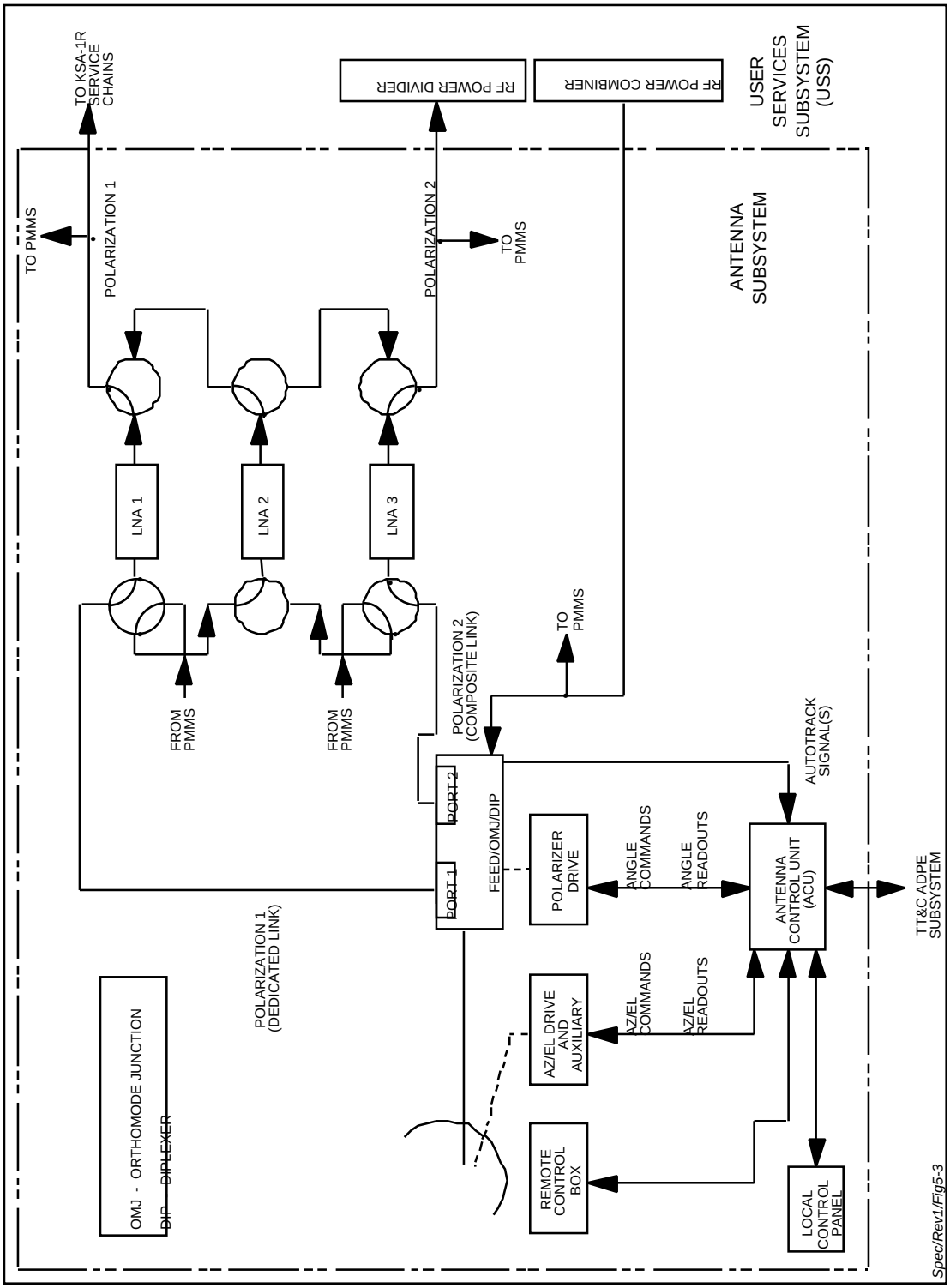

Figure 5-3. Ku-band Antenna Subsystem Reference Architecture

b. A Local Control Panel shall be provided to support local control capability.

c. A Remote Control Box located near the antenna structure shall be provided for limited antenna control capability (Section 5.2.3.5.6).

d. Antenna Subsystem control and monitoring shall be performed via the Antenna Control Unit (ACU) either by the TT&C ADPE Subsystem or by the Local Control Panel.

e. An auxiliary drive system shall be provided for operating the antenna if the main drive system becomes inoperative (Danzante and Cacique only).

f. The third SGLT antenna at each Danzante and Cacique shall be capable of being used in lieu of either of the first two SGLT antennas or the STTCS antenna (Danzante only), through the utilization of an associated switching arrangement. The associated switching arrangement for the SGLT antennas is shown in Figure 5-4.

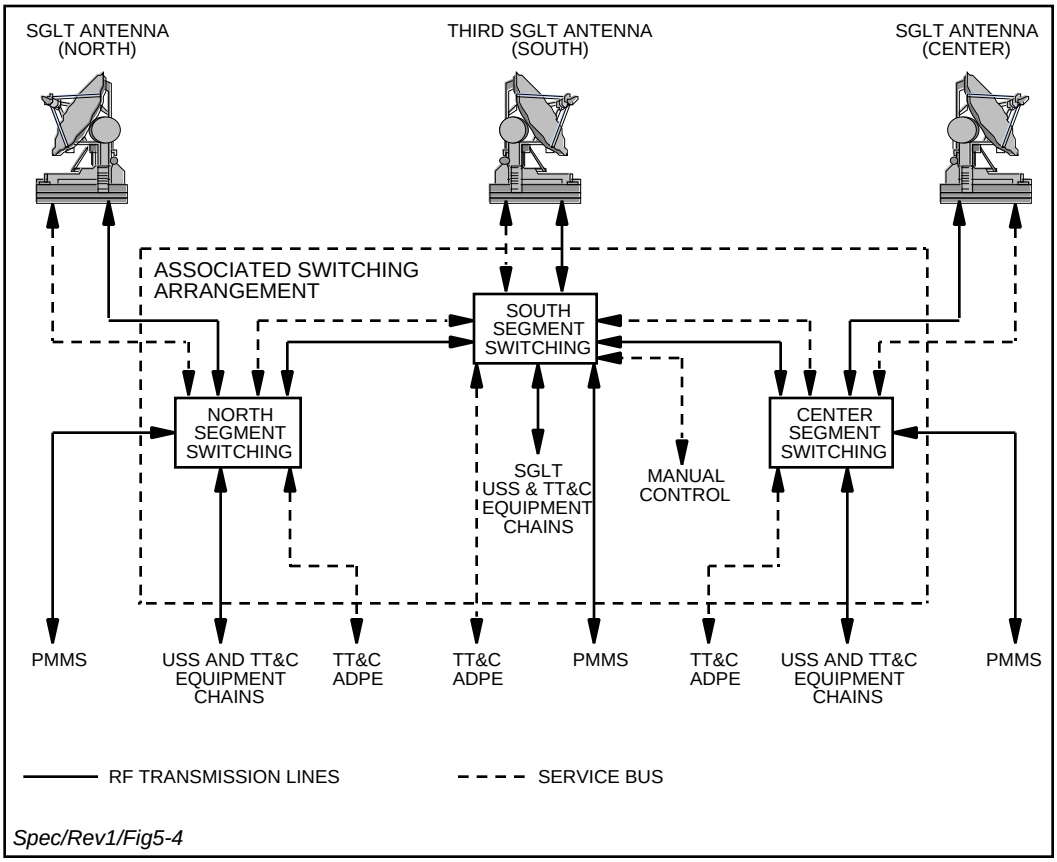

Figure 5-4. Third SGLT Antenna Switching Reference Architecture

5.2.2 Functional Requirements

The Antenna Subsystem shall perform the following functions.

a. Transmit to TDRS. The Antenna Subsystem shall:

1. Receive from the USS RF Power Combiner the following signals:

(a) KSA-1F Service.

(b) KSA-2F Service.

(c) SSA-1F Service.

(d) SSA-2F Service.

(e) MAF Service.

(f) TTCS Command Uplink (Command or Command and Range).

(g) Pilot Tone.

2. Transmit to the assigned TDRS a frequency division multiplexed signal consisting of the signals specified in Item a.1.

3. At S-band (Danzante and GRGT only):

(a) Receive command and range uplink signals from the prime TT&C command uplink chain.

(b) Transmit a right-hand circular polarized signal to the assigned TDRS.

b. Receive from TDRS. The Antenna Subsystem shall:

1. Receive and amplify a frequency division multiplexed signal from the assigned TDRS on one linear polarization, referred to as the composite link, consisting of the following signals:

(a) KSA-2R.

(b) SSA-1R.

(c) SSA-2R.

(d) MAR.

(e) TDRS Telemetry Downlink (Telemetry or Telemetry and Range).

2. Receive and amplify the KSA-1R service signal from the assigned TDRS, referred to as the dedicated link, on the orthogonal polarization to that of the composite link.

3. At S-band (Danzante and GRGT only):

(a) Receive a right-hand/circular polarized telemetry and range downlink signal from the S-band omni antenna of the assigned TDRS.

(b) Low noise amplify the received signal.

c. Control. The Antenna Subsystem shall:

1. Provide SGLT antenna pointing to the assigned TDRS.

2. Provide antenna tracking of the assigned TDRS.

3. Provide polarization alignment capability.

4. Provide switching among redundant LNAs.

d. Monitoring. The Antenna Subsystem shall:

1. Provide antenna pointing and polarization angle readouts to the Local Control Panel and to the TT&C ADPE Subsystem.
2. Provide control mode indication and equipment status to the Local Control Panel and to the TT&C ADPE Subsystem.
3. Provide the capability to permit PMMS signal injection and monitoring at the transmit/receive feed flange.

e. Third SGLT Antenna (Danzante and Cacique only). In addition to the functional requirements specified in paragraphs a, b, c, and d above, the third SGLT antenna subsystem shall also:

1. Provide one-for-two redundancy for the two SGLT antennas when not assigned by the NCC to support customer services.
2. The associated switching arrangement shall be capable of effecting all signal and control switching functions needed to disconnect either of the first two SGLT antennas from its control and communications equipment interfaces and to connect the third SGLT antenna to the same interfaces.
3. A manual third SGLT antenna cutover switching sequence shall provide capability to place the third antenna into service in a timely manner. The sequence shall comprise the following steps:
   (a) Assignment of control to either the first or second SGLT TT&C ADPE Subsystem.
   (b) AZ/EL TDRS acquisition and angle tracking cutover.
   (c) TDRS downlink signal acquisition and cutover.
   (d) Transmitter cutover.
   (e) Calibration.
4. Each TT&C ADPE Subsystem and TOCC workstation shall have positive information concerning the present configuration of the associated switching arrangement.
5. The third SGLT antenna shall provide one-for-one redundancy for the STTCS antenna when not assigned by the NCC to support customer services in a manner similar to that specified in paragraphs e.2, e.3, and e.4 above (Danzante only).

5.2.3 Performance Requirements

5.2.3.1 RF Characteristics

The specified performance below shall be achieved while simultaneously transmitting and receiving.

a. The required Ku-band transmit and receive RF characteristics shall be as specified in Tables 5-2 and 5-3, respectively.

Table 5-2. Ku-band Transmit RF Characteristics

A. OPERATING FREQUENCY BAND	14.60 TO 15.225 GHz
B. EIRP (MINIMUM INCLUDING TRACKING LOSS)	
•A. DANZANTE	
1. KSA	75.9 dBW
2. SSA	71.1 dBW
3. MA	64.1 dBW
4. COMMAND	ADJUSTABLE IN AT LEAST TEN DISCRETE STEPS FROM 59 dBW TO 88 dBW
5. PILOT	ADJUSTABLE IN AT LEAST THIRTY DISCRETE STEPS FROM 59 dBW TO 88 dBW
•B. CACIQUE	
1. KSA	73.5 dBW
2. SSA	71.1 dBW
3. MA	64.1 dBW
4. COMMAND	ADJUSTABLE IN AT LEAST TEN DISCRETE STEPS FROM 54 dBW TO 83 dBW
5. PILOT	ADJUSTABLE IN AT LEAST THIRTY DISCRETE STEPS FROM 54 dBW TO 83 dBW
•C. GRGT	
1. KSA	75.9 dBW
2. SSA	71.1 dBW
3. MA	64.1 dBW
4. COMMAND	ADJUSTABLE IN AT LEAST TEN DISCRETE STEPS FROM 59.0 - 84.0 dBW
5. PILOT	ADJUSTABLE IN AT LEAST THIRTY DISCRETE STEPS FROM 59.0 - 84.0 dBW
C. TRANSMIT GAIN (AT FEED PORT)	
•A. DANZANTE/CACIQUE	66.5 dBi, MINIMUM OVER THE TRANSMIT BAND
•B. GRGT	61.6 dBi, MINIMUM OVER THE TRANSMIT BAND
D. SIDELOBE PATTERN	
•A. DANZANTE[1]	$G \leq 29\text{-}25 \log_{10}\theta$ dBi $1° < \theta < 36.4°$ $G \leq -10$ dBi $36.4° \leq \theta \leq 180°$
•B. CACIQUE	SIDELOBE LEVELS SHALL BE 16 dB OR MORE BELOW THE MAIN LOBE.
•C. GRGT[1]	$G \leq 29\text{-}25 \log_{10}\theta$ dBi $1° < \theta < 7°$ $G \leq -10$ dBi $7° < \theta < 180°$ WHERE G IS THE GAIN (IN dBi), AT ANY FREQUENCY IN THE SPECIFIED FREQUENCY BAND, AND θ IS THE OFF-BORESIGHT ANGLE IN DEGREES.

Table 5-2. Ku-band Transmit RF Characteristics (Continued)

E. POLARIZATION	LINEAR, VERTICAL, VARIABLE, ± 90°
F. POLARIZATION ALIGNMENT ACCURACY	± 0.3° WITH RESPECT TO THE RECEIVE VERTICAL POLARIZATION.
NOTE [1]AT ANY FREQUENCY IN THE SPECIFIED BAND, NO SIDELOBE PEAK SHALL EXCEED THIS BOUND BY MORE THAN 3 dB. NO MORE THAN 10% OF THE SIDELOBE PEAKS SHALL EXCEED THE SPECIFIED BOUND. REGIONS WITHIN ± 15° FROM EACH SUBREFLECTOR SUPPORT SPAR ARE EXEMPT FROM SIDELOBE LIMITATIONS.	

Table 5-3. Ku-band Receive RF Characteristics

A. OPERATING FREQUENCY BAND	13.402 TO 14.062 GHz
B. G/T[1] •A. DANZANTE/CACIQUE •B. GRGT[4]	 40.3 dB/°K, MINIMUM OVER THE RECEIVE BAND 36.3 dB/°K, MINIMUM OVER THE RECEIVE BAND
C. SIDELOBE PATTERN •A. DANZANTE[2] •B. CACIQUE •C GRGT[2]	 $G \leq 29\text{-}25 \log_{10}\theta$dBi $1° < \theta < 36.4°$ $G \leq -10$dBi $36.4° \leq \theta \leq 180°$ SIDELOBE LEVELS SHALL BE 16 dB OR MORE BELOW THE MAIN LOBE. $G \leq 29\text{-}25 \log_{10}\theta$ dBi $1° < \theta < 7°$ $G \leq -10$ dBi $7° < \theta < 180°$ WHERE G IS THE GAIN (IN dBi), AT ANY FREQUENCY IN THE SPECIFIED FREQUENCY BAND, AND θ IS THE OFF-BORESIGHT ANGLE IN DEGREES.
D. POLARIZATION 1. POLARIZATION 1	LINEAR, VERTICAL AND HORIZONTAL OUTPUTS VERTICAL, DEDICATED KSA
2. POLARIZATION 2	HORIZONTAL, COMPOSITE SIGNAL INCLUDING SSA-1 AND SSA-2, ONE KSA CHANNEL AND THE TT&C CHANNELS
E. POLARIZATION ISOLATION[3]	30 dB MINIMUM
F. POLARIZATION ORIENTATION	± 90° FROM LOCAL VERTICAL, ORIENTATION OF BOTH POLARIZATIONS SHALL BE ALIGNED SIMULTANEOUSLY.
G. POLARIZATION ALIGNMENT ACCURACY	POLARIZATION 1, ± 0.3° WITH RESPECT TO THE TDRS POLARIZATION 1 TRANSMITTED SIGNAL.

Table 5-3. Ku-band Receive RF Characteristics (Continued)

NOTES

[1]THE SPECIFIED G/T PERFORMANCE (CLEAR SKY) SHALL INCLUDE TRACKING LOSS (AT ELEVATION ANGLES OF 5° OVER THE LOCAL HORIZON AND WHENEVER THE SUN IS ± 1° OR GREATER OFF THE ANTENNA BORESIGHT) AND SHALL INCLUDE THE TOTAL CONTRIBUTION FROM THE LNA, ASSOCIATED WAVEGUIDE SWITCHES, COUPLERS AND OUTPUT WAVEGUIDES.

[2]AT ANY FREQUENCY IN THE SPECIFIED BAND, NO SIDELOBE PEAK SHALL EXCEED THIS BOUND BY MORE THAN 3 dB. NO MORE THAN 10% OF THE SIDELOBE PEAKS SHALL EXCEED THE SPECIFIED BOUND. REGIONS WITHIN ± 15 FROM EACH SUBREFLECTOR SUPPORT SPAR PLANE ARE EXEMPT FROM SIDELOBE LIMITATIONS.

[3]POLARIZATION ISOLATION REQUIREMENT APPLIES TO PORTS 1 AND 2 (FIGURE 5-3) FOR ALL POSSIBLE POLARIZATION ORIENTATIONS. POLARIZATION ISOLATION FOR PORT 1 IS DEFINED AS THE RATIO OF THE POWER RECEIVED AT PORT 1 (EXCITED PORT) TO THAT RECEIVED AT THE ORTHOGONAL (PERPENDICULAR) PORT 2 WHEN AN ELECTROMAGNETIC WAVE (SIGNAL) WITH A PERFECTLY LINEAR POLARIZATION AND PERFECT ALIGNMENT WITH PORT 1 POLARIZATION IS INCIDENT ON THE ANTENNA APERTURE. POLARIZATION ISOLATION FOR PORT 2 IS DEFINED AS THE RATIO OF THE POWER RECEIVED AT PORT 2 TO THAT RECEIVED AT THE ORTHOGONAL PORT 1 WHEN AN ELECTROMAGNETIC WAVE WITH PERFECTLY LINEAR POLARIZATION AND PERFECTLY ORTHOGONAL TO THE POLARIZATION OF THE WAVE DEFINED ABOVE IS INCIDENT ON THE ANTENNA APERTURE.

[4]THE G/T AT GRGT INCLUDES 0.8 dB LOSS THROUGH A RADOME.

b. The Antenna Subsystem, in conjunction with the USS forward service equipment, shall satisfy the additional performance requirements of Table 5-12 (SSA), 5-19 (KSA), and 5-25 (MA).

c. The Antenna Subsystem, in conjunction with the USS return service equipment, shall satisfy the additional performance requirements of Sections 5.3.2.3.1.6 (SSA), 5.3.2.3.2.6 (KSA), and 5.3.2.3.3.6 (MA).

d. The Antenna Subsystem, in conjunction with the TTCS uplink equipment, shall satisfy the additional performance requirements of Sections 5.4.3.1 (command uplink) and 5.4.3.4 (pilot signal).

e. The Antenna Subsystem, in conjunction with the TTCS downlink equipment, shall satisfy the additional performance requirements of Sections 5.4.3.2.2 (equipment characteristics) and 5.4.3.7 (telemetry data demodulation/detection).

f. The required S-band transmit and receive RF characteristics shall be as specified in Tables 5-4 and 5-5, respectively (Danzante and GRGT only).

g. The third SGLT antenna at each Danzante and Cacique shall be capable of executing the associated cutover switching functions, starting from the last controlled position, in ten minutes.

h. The associated switching arrangement for the third SGLT antenna at each Danzante and Cacique shall introduce no insertion loss in RF paths greater than 0.3 dB.

Table 5-4. S-band Transmit RF Characteristics (Danzante and GRGT Only)

A. TRANSMIT FREQUENCY	2.0359625 GHz
B. RF BANDWIDTH (3 dB)	3 MHz, MINIMUM
C. EIRP (MINIMUM INCLUDING POINTING LOSS)	73.5 dBW
D. TRANSMIT GAIN	43.5 dBi, MINIMUM
E. SIDELOBE PATTERN[1] •A. DANZANTE[1] •B. GRGT[1]	 $G = 52-10\log(D/\lambda)-25\log(\theta)$ dBi, FOR $100\frac{\lambda}{D} \le \theta \le \frac{D}{5\lambda}$ $G \le 29-25\log_{10}\theta$ dBi $\quad 1° < \theta < 7°$ $G \le -10$ dBi $\quad 7° < \theta < 180°$ WHERE G IS THE GAIN (IN dBi) AT ANY FREQUENCY IN THE SPECIFIED FREQUENCY BAND AND θ IS THE OFF-BORESIGHT ANGLE IN DEGREES. D = DIAMETER OF ANTENNA (METERS) λ = WAVELENGTH AT TRANSMIT FREQUENCY (METERS)
F. POLARIZATION	RIGHT-HAND CIRCULAR
G. ANTENNA AXIAL RATIO	2 dB, MAXIMUM

NOTE

[1]AT ANY FREQUENCY IN THE SPECIFIED BAND, NO SIDELOBE PEAK SHALL EXCEED THIS BOUND BY MORE THAN 3 dB. NO MORE THAN 10% OF THE SIDELOBE PEAKS SHALL EXCEED THE SPECIFIED BOUND.

Table 5-5. S-band Receive RF Characteristics (Danzante and GRGT Only)

A. RECEIVE FREQUENCY	2.211 GHz
B. RF BANDWIDTH (3 dB)	3 MHz, MINIMUM
C. G/T[1]	21.5 dB/°K, MINIMUM
D. SIDELOBE PATTERN[2] •A. DANZANTE[1]	 $G = 52-10\log(D/\lambda)-25\log(\theta)$ dBi, FOR $100\frac{\lambda}{D} \le \theta \le \frac{D}{5\lambda}$

Table 5-5. S-band Receive RF Characteristics (Danzante and GRGT Only) (Continued)

•B. GRGT[1]	$G \leq 29\text{-}25 \log_{10}\theta$ dBi $1° < \theta < 7°$ $G \leq -10$ dBi $7° < \theta < 180°$ WHERE G IS THE GAIN (IN dBi) AT ANY FREQUENCY IN THE SPECIFIED FREQUENCY BAND AND θ IS THE OFF-BORESIGHT ANGLE IN DEGREES. D = DIAMETER OF ANTENNA (METERS) λ = WAVELENGTH AT TRANSMIT FREQUENCY (METERS)
E. POLARIZATION	RIGHT-HAND CIRCULAR
F. ANTENNA AXIAL RATIO	2 dB, MAXIMUM

NOTES

[1]THE SPECIFIED G/T PERFORMANCE (CLEAR SKY) SHALL INCLUDE POINTING LOSS (AT ELEVATION ANGLES OF 5° OVER THE LOCAL HORIZON AND WHENEVER THE SUN IS ± 1° OR GREATER OFF THE ANTENNA BORESIGHT) AND SHALL INCLUDE THE TOTAL CONTRIBUTION FROM THE LNA, ASSOCIATED WAVEGUIDE SWITCHES, COUPLERS AND OUTPUT WAVEGUIDES.

[2]AT ANY FREQUENCY IN THE SPECIFIED BAND, NO SIDELOBE PEAK SHALL EXCEED THIS BOUND BY MORE THAN 3 dB. NO MORE THAN 10% OF THE SIDELOBE PEAKS SHALL EXCEED THE BOUND.

5.2.3.2 Polarization Control

To achieve the polarization performance requirements of Section 5.2.3.1, the following polarization control requirements shall apply:

a. Polarization Alignment.

1.	Type	Mechanical rotation of polarizer.
2.	Rotation range	± 90° (minimum).
3.	Slew rate	0.5°/second (minimum).
4.	Rotation accuracy	± 0.3° (3 sigma) relative to command angle.
5.	Readout resolution	≤ 0.1°.
6.	Readout accuracy	± 0.1° relative to actual polarization angle not including readout resolution.

b. Modes Of Operation.

1. TOCC Manual Control (Danzante and Cacique only).
2. Local control via the Local Control Panel.

5.2.3.3 Isolation

a. Transmit/Receive Signal Isolation. The Antenna Subsystem, in conjunction with the USS, shall provide an RF transmit signal such that the combined power of all interference signals introduced by this signal into the antenna receive feed is more than 12 dB below the received desired power corresponding to 10^{-5} probability of error.

b. •A. Danzante/GRGT

Ku-band Transmit/Receive Feed Isolation. The Ku-band transmit feed port to either Ku-band receive feed port isolation shall be 35 dB minimum at any frequency in the operating bands.

•B. Cacique

Ku-band Transmit/Receive Feed Isolation. The Ku-band transmit feed port to either Ku-band receive feed port isolation shall be 25 dB minimum at any frequency in the operating bands.

c. S-band transmit/receive feed isolation (Danzante and GRGT only). The S-band transmit feed port to the S-band receive feed port isolation shall be 30 dB minimum at any frequency in the operation bands.

5.2.3.4 Mechanical Characteristics

Table 5-6 specifies the required Antenna Subsystem mechanical characteristics.

Table 5-6. Mechanical Characteristics

A. AXIS CONFIGURATION	ELEVATION OVER AZIMUTH
B. ANGULAR COVERAGE	
•A. DANZANTE/CACIQUE	
1. AZIMUTH	± 90° (DEAD ZONE NORTH)
2. ELEVATION	0° TO + 92°
•B. GRGT	
1. AZIMUTH	± 180°
2. ELEVATION	0° TO 92°
C. ANGULAR DYNAMIC CAPABILITY (EACH AXIS)	
1. ANGULAR VELOCITY	0.002°/SEC TO 0.5°/SEC
2. ANGULAR ACCELERATION	$0.5°/SEC^2$
D. WINDS	
•A. DANZANTE/CACIQUE	
1. SURVIVAL - ANY POSITION	UP TO 130 km/HOUR
2. SURVIVAL - STOW POSITION	UP TO 193 km/HOUR
•B. GRGT	
1. SURVIVAL - ANY POSITION	A RADOME SHALL BE PROVIDED AT THE GRGT AND SHALL BE TYPHOON RATED TO 200 MPH WINDS

Table 5-6. Mechanical Characteristics (Continued)

E. MAINTAIN NORMAL OPERATION WITHOUT DEGRADATION IN FOLLOWING ENVIRONMENT:	
1. AMBIENT TEMPERATURE	+ 10° F TO + 130° F
2. RELATIVE HUMIDITY	2 TO 100% WITH PRECIPITATION
3. PRECIPITATION	RAIN 4"/HOUR; THUNDERSTORMS, OCCASIONAL LIGHT SNOW AND ICE. OCCASIONAL HAIL UP TO 1 INCH IN DIAMETER.
4. SOLAR RADIATION	300 BTU/SQ. FT./HR. THE ACCURACIES SPECIFIED HEREIN SHALL INCLUDE AN ALLOWANCE FOR THE EFFECTS OF DIFFERENTIAL HEATING.
5. SAND AND DUST	BLOWN SAND AND DUST, SOUTHWESTERN DESERT REGION CATEGORY.
F. MAXIMUM SURFACE ERROR	
•A. DANZANTE	
1. WINDS UP TO 48 km/HR WITH 72 km/HR GUSTS.	$\varepsilon/D \leq 4.4 \times 10^{-5}$ WHERE ε = RMS SURFACE ERROR RELATIVE TO THE BEST FIT DESIGN SHAPE AND D = REFLECTOR DIAMETER.
2. WINDS UP TO 72 km/HR WITH 96 km/HR GUSTS.	$\varepsilon/D \leq 6.6 \times 10^{-5}$
•B. CACIQUE	
WINDS UP TO 48 km/HR WITH 62 km/HR GUSTS	$\varepsilon/D \leq 9.2 \times 10^{-5}$ WHERE ε = RMS SURFACE ERROR RELATIVE TO THE BEST FIT DESIGN SHAPE AND D = REFLECTOR DIAMETER.
C. GRGT	$\varepsilon/D \leq 4.4 \times 10^{-5}$
G. COUNTERBALANCE	COUNTERBALANCED ABOUT THE ELEVATION AXIS TO THE EXTENT THAT RELEASE OF THE BREAKS UNDER NO-WIND CONDITIONS SHALL NOT RESULT IN MOVEMENT OF THE ANTENNA FROM ANY ELEVATION ANGLE.
H. DRY AIR SYSTEM	AN AUTOMATIC DRY AIR SYSTEM SHALL BE PROVIDED FOR SERVING THE FEED ASSEMBLY AND THE TRANSMIT AND RECEIVE WAVEGUIDE RUNS.

Table 5-6. Mechanical Characteristics (Continued)

I. CORROSION PREVENTION	
•A. DANZANTE	THE REFLECTOR, BACKSTRUCTURE AND SUBREFLECTOR SUPPORT SHALL BE ALUMINUM WITH STAINLESS STEEL HARDWARE. THE REFLECTOR PANELS SHALL BE PROTECTED SO THAT THEY WILL NOT REQUIRE REFINISHING FOR THE LIFE OF THE ANTENNA. STEEL STRUCTURES SHALL BE GALVANIZED WHERE PRACTICAL. STEEL MEMBERS TOO LARGE TO GALVANIZE SHALL BE PROTECTED IN A MANNER THAT WILL MINIMIZE THE NEED FOR REFINISHING.
•B. CACIQUE/GRGT	THE REFLECTOR BACKSTRUCTURE SHALL BE PAINTED WHERE REQUIRED TO PREVENT CORROSION.
J. LIGHTNING PROTECTION	THE ANTENNA SHALL BE PROTECTED FROM LIGHTNING DAMAGE THROUGH GROUNDING CONNECTIONS TO THE SITE GROUNDING SYSTEM.
K. RADOME (GRGT ONLY)	THE ANTENNA SHALL BE OPERATED IN AN ENVIRONMENTALLY CONTROLLED RADOME.
1. AMBIENT TEMPERATURE (WITHIN RADOME)	+ 10° F TO + 85° F
2. RELATIVE HUMIDITY (WITHIN RADOME)	2 TO 50% WITH PRECIPITATION

5.2.3.5 Antenna Pointing and Tracking

The Antenna Subsystem shall be capable of supporting and operating under the following pointing and tracking modes:

a. Open Loop ADPE Control.

b. Program Spatial Scan (Ku-band operations only).

c. Autotrack (Ku-band operations only).

d. •A. Danzante/Cacique

Local Control Panel and TOCC Manual Control.

•B. GRGT

Local Control Panel.

e. Hand Crank.

f. Remote Control Box Control.

The pointing and tracking performance specified below shall be achieved in support of the TDRS with a geosynchronous orbit inclination of up to 7°.

5.2.3.5.1 Open Loop ADPE Control

a. The Antenna Subsystem shall be capable of receiving and processing azimuth and elevation pointing commands from the TT&C ADPE Subsystem.

b. Open loop pointing error is a measure of pointing accuracy and is defined to be the space angle (3-sigma) difference between the Ku-band TT&C ADPE-generated antenna pointing command vector (in terms of azimuth and elevation) and the position of the antenna RF boresight axis (reference EIA standard RS-411, Section 4.1). For antenna elevation angles greater than 4° and less than 80°, the antenna subsystem in response to azimuth and elevation commands provided by the Ku-band TT&C ADPE Subsystem, shall provide the following pointing accuracies:

1. •A. Danzante

   Pointing error during sustained (i.e., fastest mile - EIA RS-411) winds of up to 48 km/hr with 72 km/hr gust.

   1. Ku-band ≤ 0.02°
   2. S-band ≤ 0.12°

   •B. Cacique

   Pointing error during (i.e., fastest mile - EIA RS-411) sustained winds of up to 48 km/hr with 62 km/hr gust. ≤ 0.03°

   •C. GRGT

   1. Ku-band ≤ 0.02°
   2. S-band ≤ 0.12°

2. Danzante

   Pointing error during sustained winds of 72 km/hr with 96 km/hr gust.

   1. Ku-band ≤ 0.025°
   2. S-band ≤ 0.24°

5.2.3.5.2 Program Spatial Scan

a. Under control from the TT&C ADPE Subsystem, the Antenna Subsystem shall support search programs to locate the TDRS position.

b. Upon detecting a usable signal, the TT&C ADPE Subsystem shall initiate Autotrack mode.

5.2.3.5.3 Autotrack Mode

a. The Antenna Subsystem shall be capable of tracking the Ku-band telemetry signal for a monopulse autotrack implementation, or the S-band telemetry signal (Danzante and GRGT only) for a step-track autotrack implementation.

b. In the autotrack (closed loop) mode, pointing error is defined as the space angle difference between the position of the TDRS and the position of the antenna K-band RF boresight axis. For antenna elevation angles greater than 4° and less than 80°, the 3-sigma autotrack pointing error (tracking error) shall be as specified below:

1. •A. Danzante

Pointing error during sustained (i.e., fastest mile - EIA RS-411) winds of up to 48 km/hr with 72 km/hr gust.	≤ 0.01°

•B. Cacique

Pointing error during (i.e., fastest mile - EIA RS-411) winds of up to 48 km/hr with 62 km/hr gust.	≤ 0.01°

•C. GRGT

Pointing error	≤ 0.01°

2. •A. Danzante

Pointing error during sustained winds of 72 km/hr with 96 km/hr gust.	≤ 0.015°

•B. Cacique

Pointing error during sustained winds of 56 km/hr with 72 km/hr gust.	≤ 0.03°

c. Upon loss of a usable signal, or when the rate of change of signal exceeds a threshold, the antenna control shall revert to the Open Loop ADPE Control mode.

d. The antenna shall maintain tracking under 10 dB fades due to rain or other environmental causes. Protective circuits and logic shall be provided to recognize fading. Received signal level and rate of change of signal level shall be simultaneously monitored and appropriate circuitry shall place the antenna in the ADPE Control mode prior to loss of signal required to support autotrack.

5.2.3.5.4 Local and TOCC Manual Control

Manual controls shall be provided both at the Local Control Panel and at the TOCC (Danzante and Cacique only) for moving and positioning the antenna. The following performance shall apply:

a. Velocity Control. Hand operated controls shall be provided for moving the antenna at any rate over the range specified in Table 5-6, Item c. These controls shall have a dead band position such that when the velocity control mode is selected, the antenna is not moved when the controls are in their dead band position.

b. Position Control. Hand controls shall be provided for positioning the antenna to a resolution of 0.001°, both axes. When the position control mode is selected, the antenna shall not deviate more than 0.01° from the selected position.

5.2.3.5.5 Hand Crank

Hand cranks shall be provided for manually positioning the antenna in both azimuth and elevation and shall be readily accessible and mounted at a convenient height for personnel use. Positive interlocks shall be provided to prevent energizing the drive system during the use of the manual drive.

5.2.3.5.6 Remote Control Box

A remote control box for controlling the antenna from the antenna assembly structure shall be provided for maintenance purposes.

5.2.3.6 Auxiliary Drive (Danzante and Cacique Only)

One azimuth and one elevation auxiliary drive system shall be provided and shall achieve the performance specified below.

a. •A. Danzante

The auxiliary drive shall be capable of providing an angular velocity of 0.01°/sec for sustained winds up to 48 km/hr with 72 km/hr gusts

•B. Cacique

The auxiliary drive shall be capable of providing an angular velocity of 0.01°/sec during 48 km/hr sustained wind with 62 km/hr gusts.

b. The auxiliary drive shall be capable of positioning the antenna to within 0.0075° of any position desired.

5.2.3.7 Equipment and Performance Status Monitoring

a. The Antenna Subsystem shall provide the performance monitoring and measuring capability specified in Table 5-7. All displays shall be available both at the Local Control Panel, the TOCC Manual Control Panel (Danzante and Cacique only) and at the TT&C TOCC workstations, located at Danzante and Cacique only.

Table 5-7. Equipment And Performance Status Monitoring Requirements

A. AZIMUTH ANGLE READOUT (RESOLUTION OF 0.001°)
B. ELEVATION ANGLE READOUT (RESOLUTION OF 0.001°)
C. POLARIZATION ANGLE (RESOLUTION OF 1.0°)
D. ADPE/MANUAL MODE
E. 1. LOCAL MODE (POLARIZATION) 2. TOCC MANUAL MODE (POLARIZATION) (DANZANTE AND CACIQUE ONLY)
F. LNA CONFIGURATION
G. AUTOTRACK SIGNALS 1. AZIMUTH/ELEVATION ERROR SIGNALS (IF MONOPULSE) 2. POWER LEVEL (IF STEP-TRACK) 3. AUTOTRACK LOCK STATUS
H. EQUIPMENT PERFORMANCE STATUS
I. EQUIPMENT CONFIGURATION STATUS

b. PMMS access to the forward link signal shall be provided as close to the antenna as possible for "loop back" tests, delay measurements for range zero set and spectrum analysis of the forward signal.

c. PMMS access to the return link signals shall be provided as close as possible to each received signal port (polarization 1 and 2) to permit signal injection and monitoring of test and "loop back" signals, and to provide spectrum analysis of the return signal.

d. Capability shall be provided to the PMMS to monitor the return signals after the output switching of the LNAs (Figure 5-3).

e. Capability shall be provided as close to the antenna as possible, to monitor the forward multiplexed signal after RF power combining and before the transmit feed.

5.2.4 Interface Requirements

The Antenna Subsystem interface requirements shall be as specified in Table 5-8.

Table 5-8. Antenna Subsystem Interface

FROM	TO	PARAMETER/SIGNAL
ANTENNA SUBSYSTEM	USS	DEDICATED KSA RETURN LINK
		COMPOSITE RETURN LINK
	TT&C ADPE SUBSYSTEM	PARAMETERS SPECIFIED IN TABLE 5-7
USS	ANTENNA SUBSYSTEM	FREQUENCY DIVISION MULTIPLEXED (FDM) UPLINK SIGNAL
TT&C ADPE SUBSYSTEM	ANTENNA SUBSYSTEM	AZIMUTH/ELEVATION POINTING COMMANDS
		EQUIPMENT CONFIGURATION COMMAND (E.G., LNA SWITCHING)

The Danzante and GRGT dual band SGLT antennas shall also interface with the SGLT Ku-band TT&C ground equipment to support S-band TT&C operations.

The third SGLT antenna at each Danzante and Cacique shall interface with all SGLTs at the respective ground terminal, as specified in Table 5-8, and the STTCS (Danzante only) as specified in Section 6.2.3.

5.2.5 Operational Requirements

The following operational requirements shall apply:

a. The Antenna Subsystem shall be available for operations on a continuous basis. Periodic maintenance and lubrication shall be possible while the antenna is in use.

b. The antenna shall be capable of being operated manually from the following locations:

   1. TOCC (Danzante and Cacique only).
   2. Local Control Panel.
   3. Hand Crank location (Hand Crank mode only).
   4. Remote Control Box.

c. The normal operating position shall be the TOCC TT&C workstation.

d. All operating modes (Section 5.2.3.5) shall be selectable manually or via the ADPE.

e. The normal antenna tracking mode shall be autotracking. In the event of signal loss, the Open Loop ADPE Control mode shall automatically be enabled.

f. Antenna operation in the specified environment shall be performed without the need for heaters or seasonal change of lubricant.

g. The dual band SGLT antenna (Danzante and GRGT only) shall be primarily for Ku-band TT&C and for customer service support. The S-band TT&C function shall be enabled as required by operations. The S-band TT&C function shall be utilized to support TDRS operation during ETO.

h. The TOCC at each Danzante and Cacique shall be able to assign the respective third SGLT antenna to any of the respective SGLTs or the STTCS (Danzante only). The third SGLT assignment shall be capable of implementation by manual operation of the south segment of the associated switching arrangement by maintenance personnel. After such operation, the designated TT&C ADPE shall control the third SGLT antenna until control is returned to local control or to the third SGLT TT&C ADPE. Under control of the TT&C ADPE, the third SGLT antenna shall be calibrated as necessary prior to being placed in operational service. Local control shall have the capability of commanding the third SGLT antenna into stow position.

5.3 User Service Subsystem (USS)

This section specifies the User Service Subsystem requirements. Forward service, return service, and tracking service requirements are specified in turn.

5.3.1 Forward Services

This section specifies USS requirements to support single access forward (SAF) and multiple access forward (MAF) customer services. The functional, performance, and interface requirements are specified in Sections 5.3.1.2, 5.3.1.3, and 5.3.1.4, respectively.

5.3.1.1 Overview and Architecture

This section provides an overview and architecture of the USS SAF and MAF equipment. S-band single access forward (SSAF) equipment, K-band single access forward (KSAF) equipment, and MAF equipment are specified in turn.

5.3.1.1.1 SSAF Overview and Architecture

The USS SSAF reference architecture is shown in Figure 5-5. Each of the two SSAF services per SGLT shall be provided by independent equipment chains capable of processing customer forward service data from baseband to RF. The SSAF equipment chains shall also support range and Doppler tracking services (Section 5.3.3).

The USS shall include the capability for continuously monitoring, and periodically reporting, equipment status, service performance status, and the quality of SSAF customer data during a scheduled service. Customer data detection shall be accomplished by a dedicated set of equipment designated Data Presence Monitors (DPMs).

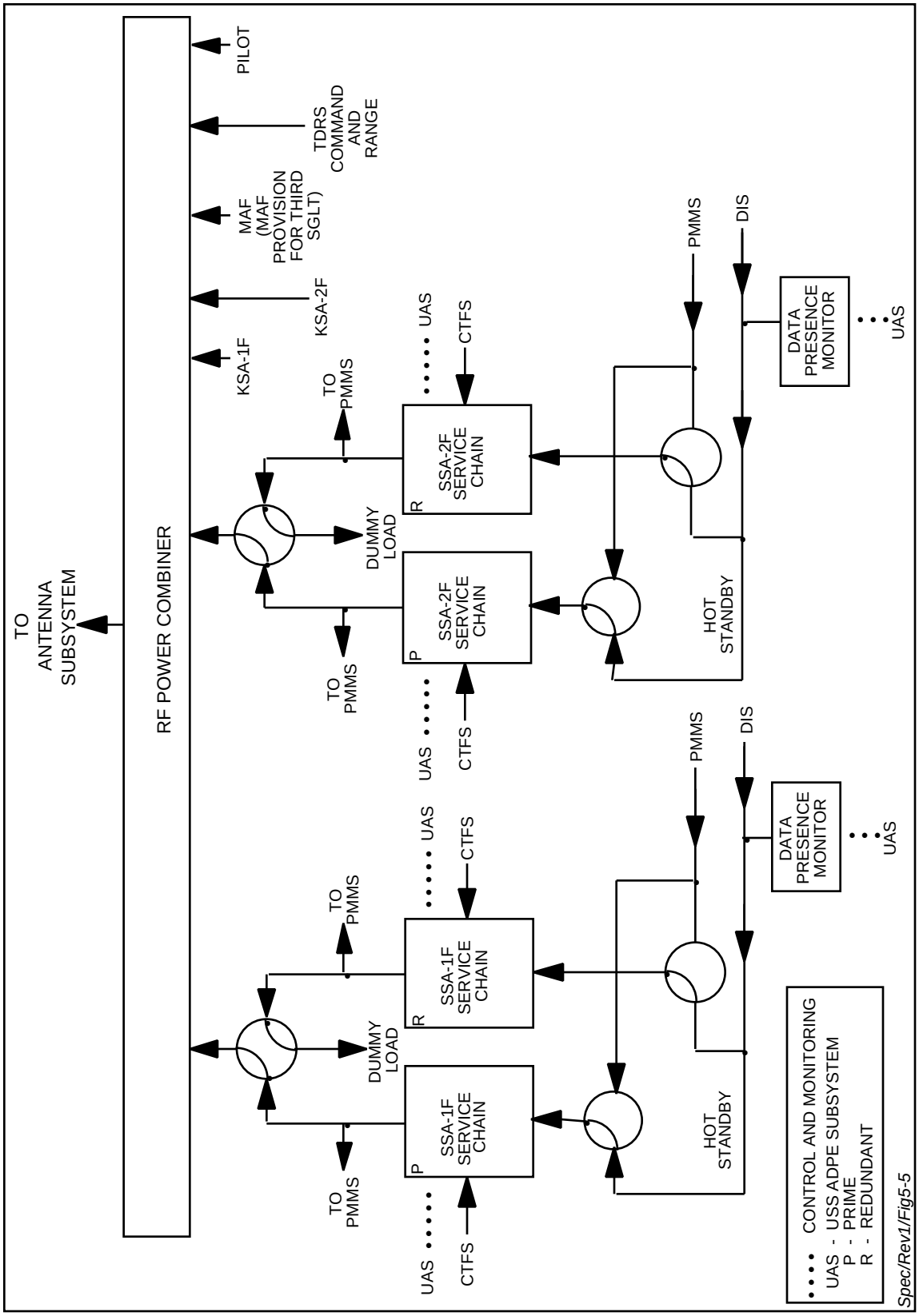

Figure 5-5. USS SSAF Reference Architecture

For each of the SSA-1F and SSA-2F services, the SSAF USS ground equipment shall include one prime equipment chain with a 100% redundant equipment chain. Each equipment chain shall be capable of supporting a normal customer service (SSAF) and a Shuttle customer service (SSHF), but not both simultaneously. Each such equipment chain shall be referred to as an SSAF service chain. The SSAF service chains shall receive a data signal and clock signal from the DIS. The following architectural requirements shall apply:

a. For each of the SSA-1F and SSA-2F services, the USS ground equipment shall include one prime service chain with a 100% redundant service chain, the components of each service chain shall each be dedicated to either the prime or the redundant SSAF service chain, and shall not be interchanged between the service chains.

b. The SSA-1F and SSA-2F service chains shall be completely independent (i.e., SSA-1F service chains (prime and redundant) shall not be interchanged with SSA-2F service chains (prime and redundant)).

c. SSA-1F service chains shall only be associated with SSA-1R service chains and not with SSA-2R service chains; SSA-2F service chains shall only be associated with SSA-2R service chains and not with SSA-1R service chains.

d. The selection of prime and redundant forward service chains shall be independent of the selection of prime and redundant return service chains.

e. Each of the SSAF service chains shall be of identical design and shall be capable of transmitting the output signals at the assigned carrier frequency (SSA-1F or SSA-2F).

f. Each SSAF service chain shall be configurable to receive baseband test signals from the PMMS and to distribute RF output test signals to the PMMS.

g. Interfaces with the MA service equipment shall be provided, as required, to support cross support communications and tracking services.

5.3.1.1.2 KSAF Overview and Architectures

The USS KSAF reference architecture is shown in Figure 5-6. Each of the two KSAF services per SGLT shall be provided by independent equipment chains capable of processing customer forward service data from baseband to RF. The KSAF equipment chains shall also support range and Doppler tracking services (Section 5.3.3).

The USS shall include the capability for continuously monitoring and periodically reporting, equipment status, service performance status, and the quality of KSAF customer data during a scheduled service. Customer data detection shall be accomplished by a dedicated set of equipment designated Data Presence Monitors (DPMs).

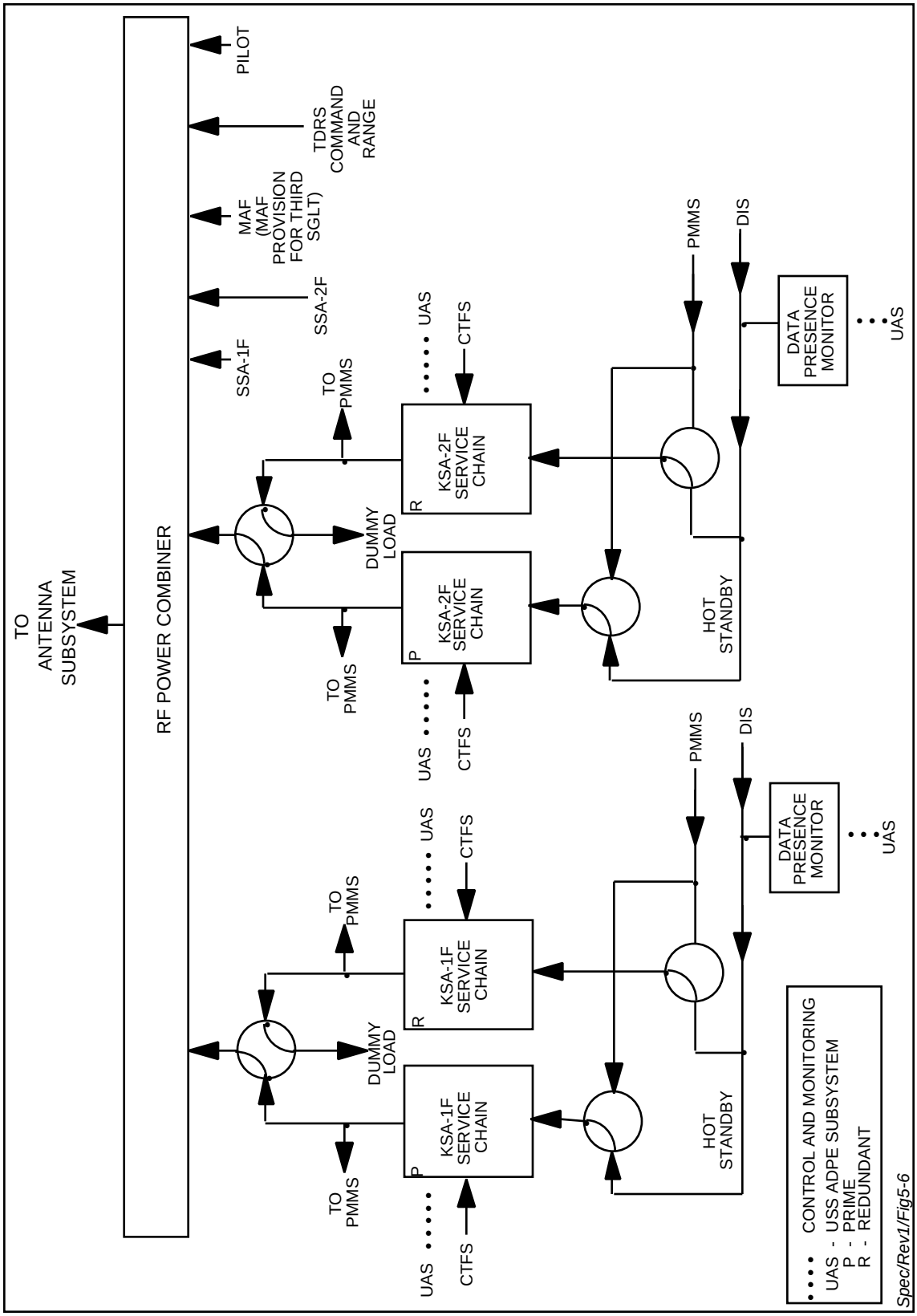

Figure 5-6. USS KSAF Reference Architecture

For each of the KSA-1F and KSA-2F services, the KSAF USS ground equipment shall include one prime equipment chain with a 100% redundant equipment chain. Each equipment chain shall be capable of supporting a normal customer service (KSAF) and a Shuttle customer service (KSHF), but not both simultaneously. Each such equipment chain shall be referred to as a KSAF service chain. The KSAF service chains shall receive a data symbol and clock signal from the DIS. The following requirements shall apply:

a. For each of the KSA-1F and KSA-2F services, the USS ground equipment shall include one prime service chain with a 100% redundant service chain; the components of each service chain shall each be dedicated to either the prime or the redundant KSAF service chain, and shall not be interchanged between the service chains.

b. The KSA-1F and KSA-2F service chains shall be completely independent (i.e., KSA-1F service chains (prime and redundant) shall not be interchanged with KSA-2F service chains (prime and redundant)).

c. KSA-1F service chains shall only be associated with KSA-1R service chains and not with KSA-2R service chains; KSA-2F service chains shall only be associated with KSA-2R service chains and not with KSA-1R service chains.

d. The selection of prime and redundant forward service chains shall be independent of the selection of prime and redundant return service chains.

e. Each of the KSAF service chains shall be of identical design and shall be capable of transmitting the output signals at the assigned carrier frequency (KSA-1F or KSA-2F).

f. Each KSAF service chain shall be configurable to receive baseband test signals from the PMMS and to distribute RF output test signals to the PMMS.

5.3.1.1.3 MAF Overview and Architecture

The USS MAF reference architecture is shown in Figure 5-7. MAF service shall be provided by equipment chains capable of processing customer forward service data from baseband to RF. The MAF equipment chains shall also support range and Doppler tracking services (Section 5.3.3).

The USS shall include the capability for continuously monitoring, and periodically reporting, equipment status, service performance status, and the quality of MAF customer data during a scheduled service. Customer data detection shall be accomplished by a dedicated set of equipment designated Data Presence Monitors (DPMs).

The MAF USS ground equipment shall include one prime equipment chain with a 100% redundant equipment chain. Each equipment chain shall be capable of supporting a MAF customer service. Each such equipment chain shall be referred to as an MAF service chain. The following architectural requirements shall apply:

a. The USS MAF ground equipment shall include one prime service chain with a 100% redundant service chain; the components of each service chain shall each be dedicated to either the prime or the redundant MAF service chain, and shall not be interchanged between the service chains.

b. Each of the MAF service chains shall be of identical design.

c. The MAF service chains shall be capable of being associated with any one of the MAR signal processors.

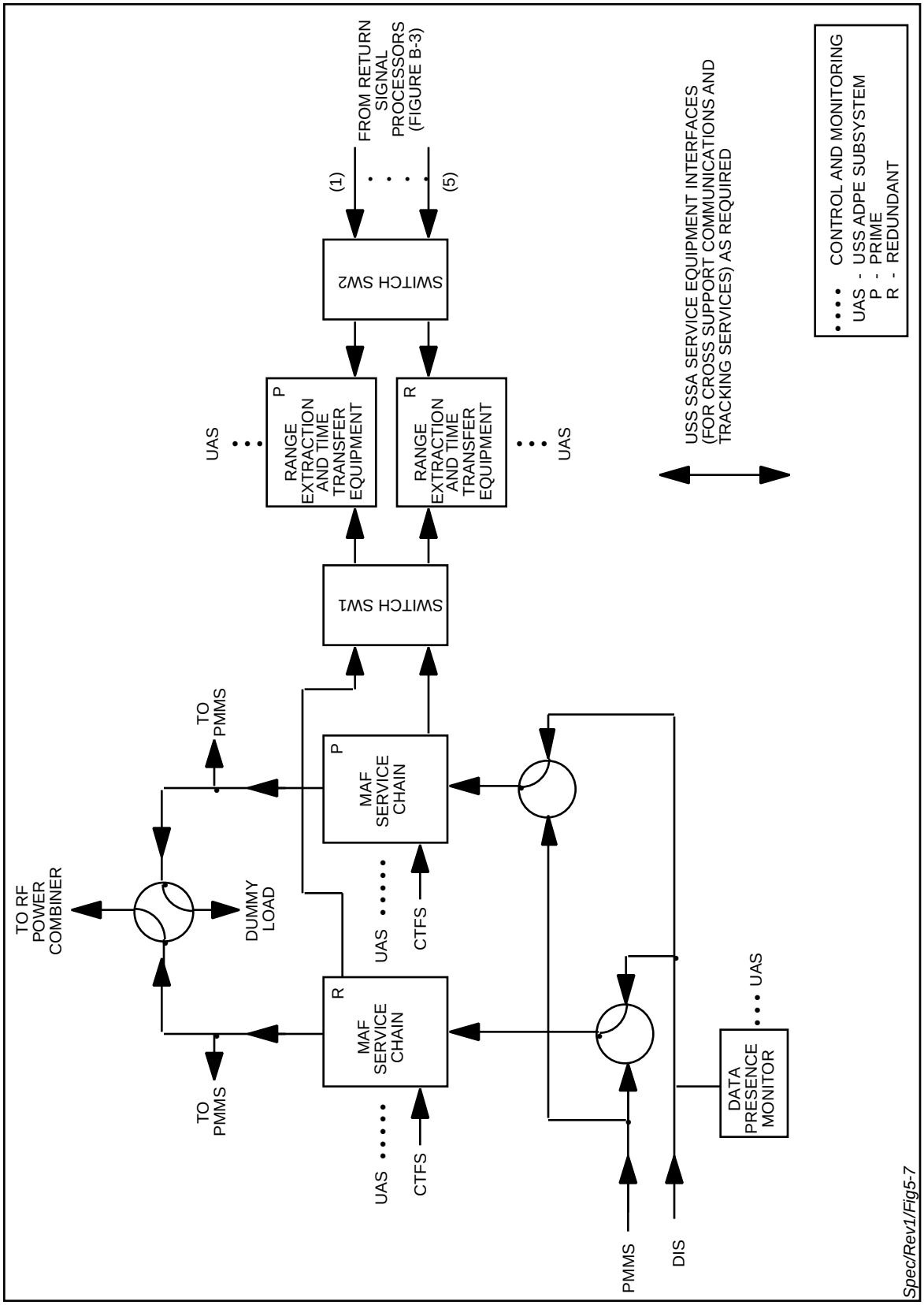

Figure 5-7. MA USS Reference Architecture - MAF and Range Extraction Equipment

d. Each MAF service chain shall be configurable to receive baseband test signals from the PMMS and to distribute RF output test signals to the PMMS.

e. Interfaces with the SSA service equipment shall be provided as required to support cross support communications and tracking services.

5.3.1.2 Functional Requirements

The functional requirements for SAF and MAF service support are divided as follows:

a. RF Power Combiner.

b. SSAF Equipment.

c. KSAF Equipment.

d. MAF Equipment.

5.3.1.2.1 RF Power Combiner

The RF Power Combiner shall perform the following functions:

a. Receive the following RF input signals:

   1. TTCS Command and Range.
   2. TTCS Pilot.
   3. SSA-1F Service.
   4. SSA-2F Service.
   5. KSA-1F Service.
   6. KSA-2F Service.
   7. MAF Service.

b. Power combine the signals indicated in Item a.

c. Filter the composite signal.

d. Provide the filtered composite signal to the Antenna Subsystem.

5.3.1.2.2 SSAF Equipment

Figure 5-8 is a functional diagram of an SSAF service chain. Each SSA-1F and SSA-2F equipment group shall include one prime service chain and one redundant service chain which can be operated in hot-standby mode. Each SSAF service chain shall be capable of performing the following functions:

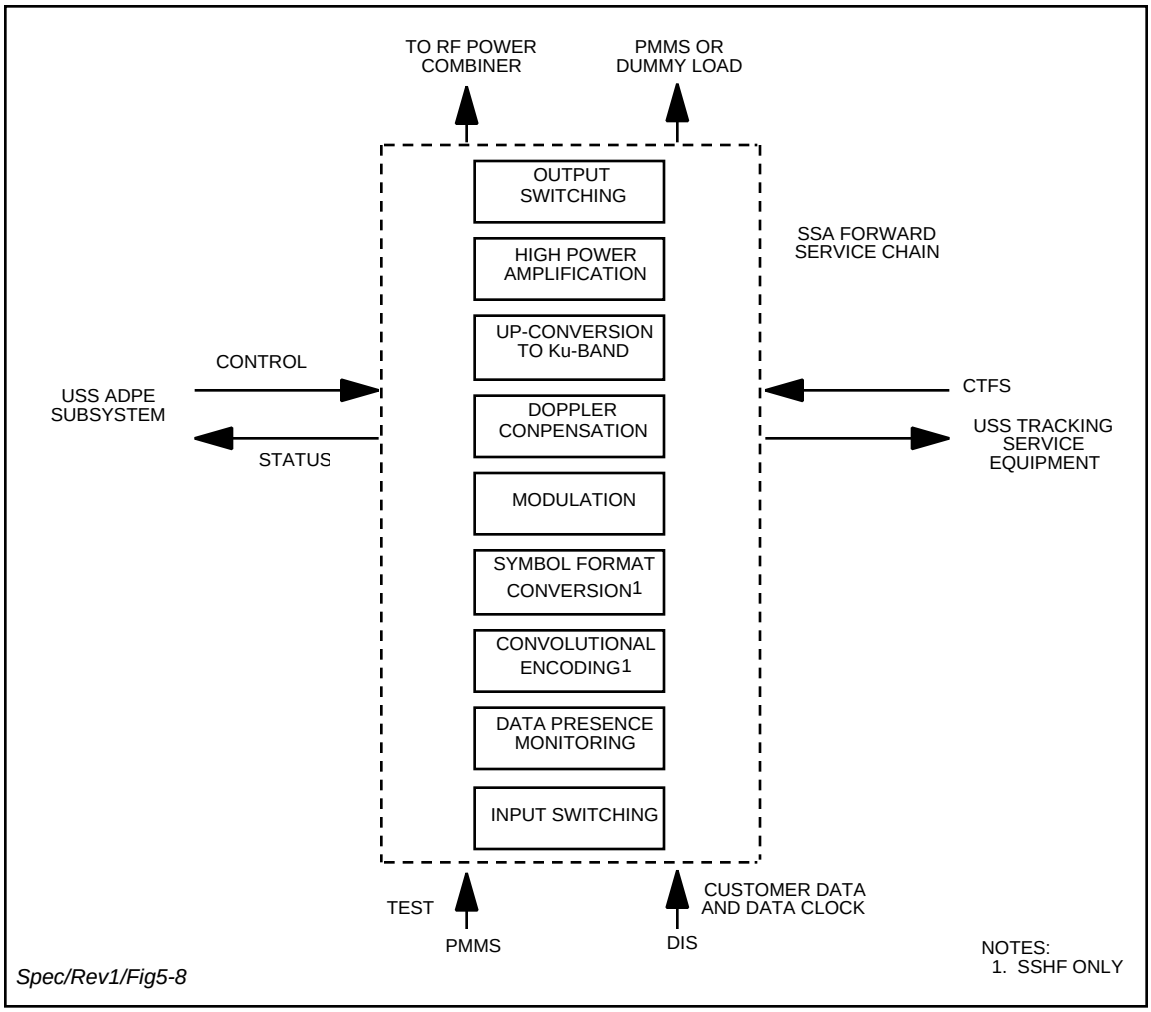

Figure 5-8. USS SSAF Functional Diagram

a. SSAF Service Support

1. Receive and monitor baseband signals:

(a) Receive SSAF customer data and data clock from the DIS and receive baseband test data and clock from the PMMS.

(b) Continuously monitor the data and data clock channels, and provide data and clock presence information to the USS ADPE Subsystem. The requirements for data presence monitoring are described in Appendix B.

2. Modulate the SSAF service link:

(a) Generate two synchronous PN sequences: a short code which PN spreads the customer command data (I Channel) and a long code for customer spacecraft range tracking (Q Channel).

(b) Modulo-2 add the short PN code and the input data and use the sum to BPSK modulate one phase of the IF carrier.

(c) BPSK modulate the quadrature phase of the IF carrier using the long PN code.

(d) Combine the two BPSK modulated IF carrier phases to form a QPSK IF carrier with an I/Q power ratio of +10 dB.

3. Provide the capability to perform SSAF link Doppler compensation, as scheduled:

   (a) Simultaneously adjust the forward link carrier frequency and PN chip rates to compensate for the calculated Doppler shifts due to the relative velocities between the customer spacecraft and the assigned TDRS and between the assigned TDRS and the SGLT.

   (b) Receive Doppler updates from the USS ADPE Subsystem.

4. Frequency upconvert the IF carrier to the designated SSAF Ku-band frequency.

5. Power amplify the QPSK signal to the required power level.

6. Provide the resultant signal to the RF Power Combiner, the PMMS, or the dummy load.

7. Provide service performance and equipment status data to the USS ADPE Subsystem and to indicators on the equipment front panels.

8. Provide the following signal interface ports:

   (a) Baseband/IF/RF signal interface ports to support the Maintenance Test Group (MTG) functions (Section 12).

   (b) Interface ports to provide the capability to:

      (1) Extract the unmodulated IF carrier as output.

      (2) Inject a modulated IF carrier as input.

9. Provide the switching capabilities to support the switching requirements of Figure 5-5:

   (a) Selection of baseband inputs (DIS and PMMS test) into the designated prime and redundant SSAF service chains.

   (b) Selection of distribution (RF Power Combiner, PMMS or dummy load) of RF service chain outputs.

10. Support customer tracking services and time transfer, as scheduled, by providing the forward PN code epoch and PN clock to the USS tracking equipment.

b. SSHF Service Support. To support SSHF service, the SSAF service chain shall be capable of performing the following additional functions:

1. Independently Doppler-compensate the PN code chip rate and carrier frequency.
2. Independently inhibit Doppler compensation of the PN code chip rate and of the carrier frequency.
3. Rate 1/3 convolutionally encode the SSHF baseband data.
4. Biphase-L format the encoded output symbols.

5.3.1.2.3 KSAF Equipment

Figure 5-9 is a functional diagram of a KSAF service chain. Each KSA-1F and KSA-2F equipment group shall include one prime service chain and one redundant service chain which can be operated in hot-standby mode. Each KSAF service chain shall be capable of performing the following functions:

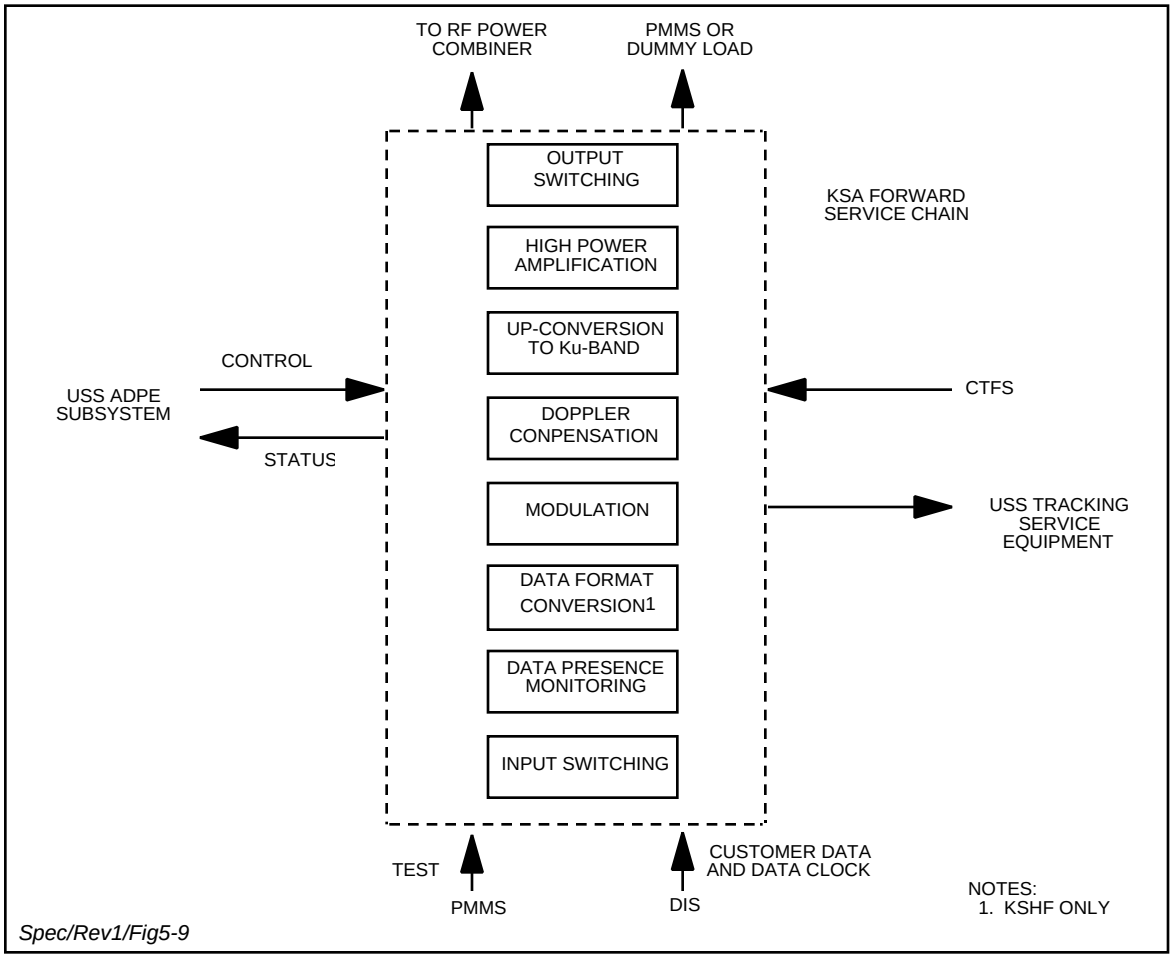

Figure 5-9. USS KSAF Functional Diagram

a. KSAF Service Support.

1. Receive and monitor baseband signals:

   (a) Receive KSAF customer data and data clock from the DIS and receive baseband test data and clock from the PMMS.

   (b) Continuously monitor the data and data clock channels and provide data and clock presence information to the USS ADPE Subsystem. The requirements for data presence monitoring are described in Appendix B.

2. Modulate the KSAF service link:

   (a) Generate two synchronous PN sequences: a short code which PN spreads the customer command data and a long code for customer spacecraft range tracking; command channel PN modulation and utilization of the long PN code shall not be used for data rates greater than 300 kbps.

   (b) Modulo-2 add the short PN code and the input data and use the sum to BPSK modulate one phase of the IF carrier. Utilization of the short PN code shall not be used for data rates greater than 300 kbps.

   (c) BPSK modulate the quadrature phase of the IF carrier using the long PN code (not applicable for data rates greater than 300 kbps).

   (d) Combine the two BPSK modulated IF carrier phases to form a QPSK IF carrier with an I/Q power ratio of +10 dB (not applicable for data rates greater than 300 kbps).

   (e) BPSK modulate the carrier for data rates greater than 300 kbps.

3. Provide the capability to perform KSAF link Doppler compensation, as scheduled:

   (a) Simultaneously adjust the forward link carrier frequency and PN chip rates to compensate for the calculated Doppler shifts due to the relative velocities between the customer spacecraft and the assigned TDRS and between the assigned TDRS and the SGLT.

   (b) Receive Doppler updates from the USS ADPE Subsystem.

4. Frequency upconvert the IF carrier to the designated KSAF Ku-band frequency.

5. Power amplify the QPSK or BPSK signal to the required power level.

6. Provide the resultant signal to the RF Power Combiner, the PMMS, or the dummy load.

7. Provide service performance and equipment status data to the USS ADPE Subsystem and to indicators on the equipment front panels.

8. Provide the following signal interface ports:

   (a) Baseband/IF/RF signal interface ports to support the Maintenance Test Group (MTG) functions (Section 12).

(b) Interface ports to provide the capability to:

(1) Extract the unmodulated IF carrier as output.

(2) Inject a modulated IF carrier as input.

9. Provide the switching capability to support the switching requirements of Figure 5-6:

(a) Selection of baseband inputs (DIS and PMMS test) into the designated prime and redundant KSAF service chains.

(b) Selection of distribution (RF Power Combiner, PMMS or dummy load) of RF service chain outputs.

10. Support customer tracking services and time transfer, as scheduled, by providing the forward PN code epoch and PN clock to the USS tracking equipment.

b. KSHF Service Support. To support KSHF service, the KSAF service chain shall also have the capability to convert the DIS NRZ-L baseband data to Biphase-L format.

5.3.1.2.4 MAF Equipment

Figure 5-10 is a functional diagram of a MAF service chain. USS MAF equipment shall include one prime service chain and one redundant service chain which can be operated in hot-standby mode. Each MAF service chain shall be capable of performing the following functions for MAF service support.

a. Receive and monitor baseband signals:

(1) Receive MAF customer data and data clock from the DIS and receive baseband test data and clock from the PMMS.

(2) Continuously monitor the data and data clock channels, and provide data and clock presence information to the USS ADPE Subsystem. The requirements for data presence monitoring are described in Appendix B.

b. Modulate the MAF service link:

(1) Generate two synchronous PN sequences: a short code which PN spreads the customer command data (I Channel) and a long code for customer spacecraft range tracking (Q Channel).

(2) Modulo-2 add the short PN code and the input data and use the sum to BPSK modulate one phase of the IF carrier.

(3) BPSK modulate the quadrature phase of the IF carrier using the long PN code.

(4) Combine the two BPSK modulated IF carrier phases to form a QPSK IF carrier with an I/Q power ratio of +10 dB.

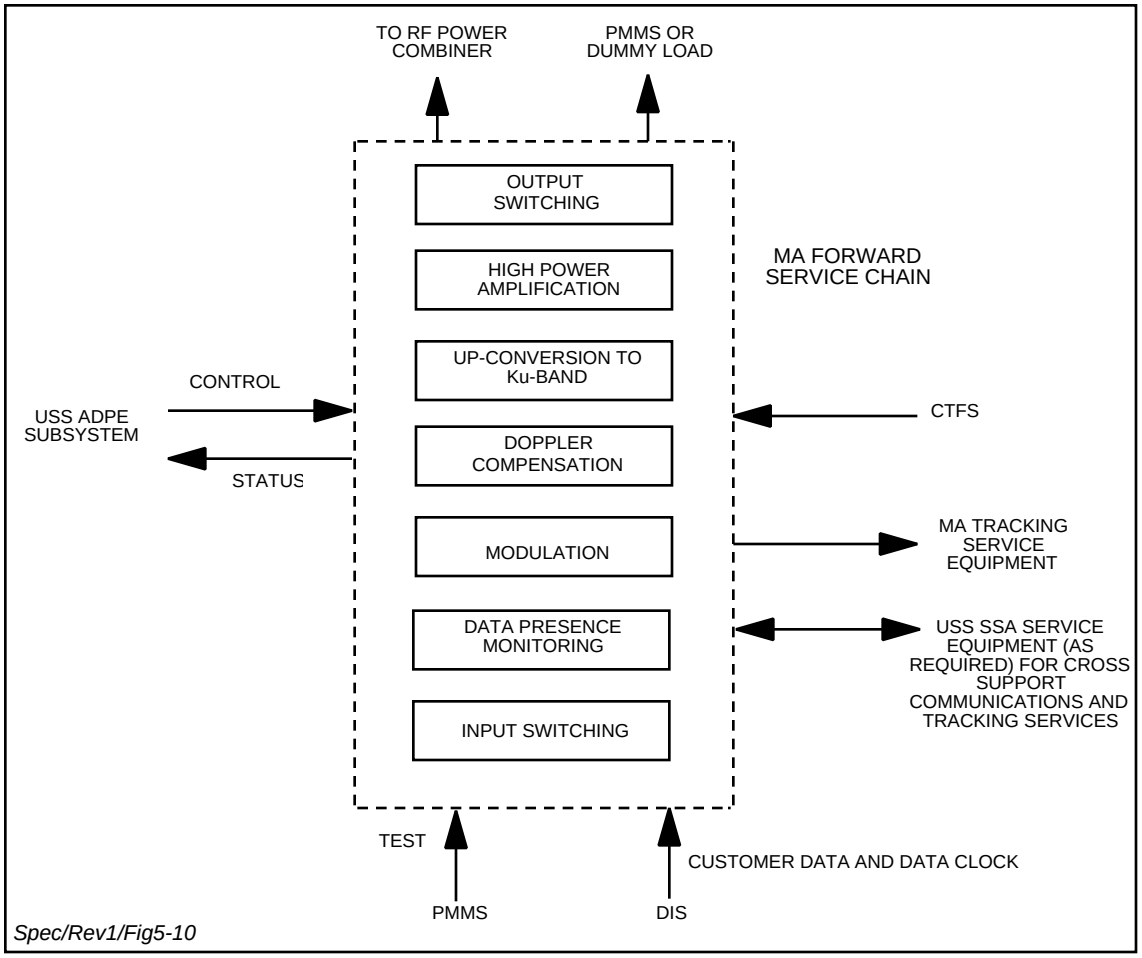

Figure 5-10. USS MAF Functional Diagram

c. Provide the capability to perform MAF link Doppler compensation, as scheduled:

   (1) Simultaneously adjust the forward link carrier frequency and PN chip rates to compensate for the calculated Doppler shifts due to the relative velocities between the customer spacecraft and the assigned TDRS and between the assigned TDRS and the SGLT.

   (2) Receive Doppler updates from the USS ADPE Subsystem.

d. Frequency upconvert the IF carrier to the designated MAF Ku-band frequency.

e. Power amplify the QPSK signal to the required power level.

f. Provide the resultant signal to the RF Power Combiner, the PMMS, or the dummy load.

g. Provide service performance and equipment status data to the USS ADPE Subsystem and to indicators on the equipment front panels.

h. Provide the baseband/IF/RF signal interface ports to support the Maintenance Test Group (MTG) functions (Section 12).

i. Provide the switching capabilities to support the switching requirements of Figure 5-7:

   (1) Selection of baseband inputs (DIS and PMMS test) into the designated prime and redundant MAF service chains.

   (2) Selection of distribution (RF Power Combiner, PMMS or dummy load) of RF service chain outputs.

j. Support customer tracking services and time transfer, as scheduled, by providing the forward PN code epoch and PN clock to the USS tracking equipment.

5.3.1.3 Performance Requirements

The performance requirements for SAF and MAF service support are divided as follows:

a. SSAF Equipment.

b. KSAF Equipment.

c. MAF Equipment.

5.3.1.3.1 SSAF Equipment

The performance of the SSAF equipment shall be as specified below.

5.3.1.3.1.1 Signal Parameters

The SSAF service chain shall provide a signal with parameters as specified in Tables 5-9 (SSAF) and 5-10 (SSHF).

5.3.1.3.1.2 Forward Signal Constraints

The SSAF service chain shall provide a SSAF signal which meets the signal constraint requirements of Table 5-11; these characteristics are defined at the output of the USS.

5.3.1.3.1.3 Additional SSAF Signal Requirements

The SSAF service chain, in conjunction with the Antenna Subsystem shall satisfy the additional performance requirements of Table 5-12.

Table 5-9. SSAF Service Signal Parameters

A. RATIO OF COMMAND CHANNEL POWER TO RANGE CHANNEL POWER	10 dB
B. RANGE CHANNEL	
1. CARRIER FREQUENCY	COMMAND CHANNEL CARRIER FREQUENCY DELAYED π/2 RADIANS
2. PN MODULATION	PSK, ± π/2 RADIANS
3. CARRIER SUPPRESSION	30 dB MINIMUM
4. PN CHIP RATE	$\frac{31}{221 \times 96} \times K_F$ SYNCHRONOUS WITH COMMAND CHANNEL PN CODE CHIP RATE (≈ 3M CHIPS/SEC)
5. PN CODE LENGTH	$(2^{10}-1) \times 256$ CHIPS
6. PN CODE EPOCH REFERENCE	PN CODE EPOCH (ALL 1'S CONDITION) SYNCHRONIZED TO THE COMMAND CHANNEL PN CODE EPOCH
7. PN CODE FAMILY	TRUNCATED 18-STATE SHIFT REGISTER SEQUENCES; PER STDN NO.108
C. COMMAND CHANNEL	
1. CARRIER FREQUENCY	SGLT TRANSMIT CARRIER FREQUENCY
2. PN MODULATION	PSK, ± π/2 RADIANS
3. CARRIER SUPPRESSION	30 dB MINIMUM
4. PN CODE LENGTH	$2^{10}-1$ CHIPS
5. PN CODE FAMILY	GOLD CODES; PER STDN NO.108
6. PN CHIP RATE[1] (CHIPS/SEC)	$\frac{31}{221 \times 96} \times K_F$ (≈ 3M CHIPS/SEC)
7. DATA FORMAT	NRZ-L, NRZ-M, NRZ-S
8. DATA RATE[2]	0.1 TO 300 kbps
9. DATA MODULATION	MODULO-2 ADDED ASYNCHRONOUSLY TO PN CODE

NOTES

[1] K_F IS THE TDRS-TO-CUSTOMER FREQUENCY.

$$2200 \text{ MHz} \left(\frac{221}{240}\right) \le K_F \le 2300 \text{ MHz} \left(\frac{221}{240}\right)$$

[2] THE SSAF SERVICE CHAIN SHALL BE CAPABLE OF ACCOMMODATING ANY CHANGE TO THE ACTUAL INPUT DATA RATE WITHOUT THE SGLT BEING NOTIFIED OF THE CHANGE BY THE NCC.

Table 5-10. SSHF Service Signal Parameters

A. DATA RATE	MODE 1: 32 kbps; MODE 2: 72 kbps
B. CONVOLUTIONAL CODING	NRZ-L INPUT DATA SHALL BE CONVOLUTIONALLY ENCODED IN MODES 1 & 2
C. CODE RATE	1/3
D. CONSTRAINT LENGTH	7
E. GENERATOR FUNCTIONS	G_1: 1111001; G_2: 1011011; G_3: 1100101
F. DATA FORMAT	ENCODED DATA SHALL BE CONVERTED TO BIPHASE-L FORMAT
G. DATA MODULATION[1]	BIPHASE-L SYMBOLS SHALL BE MODULO-2 ADDED ASYNCHRONOUSLY TO PN CODE
H. PN CHIP RATE[2]	11.232 MCHIPS PER SECOND, TUNABLE OVER ± 0.1%
I. PN CODE LENGTH	1023 CHIPS
J. CARRIER MODULATION	PSK, ± π/2 RADIANS
K. CARRIER SUPPRESSION	30 dB, MINIMUM
L. PN CODE FAMILY	PER STDN 108

NOTES

[1]WHEN THE DATA CLOCK SIGNAL IS CLAMPED TO A LOGICAL-1 STATE, THE CARRIER SHALL CONTAIN NO DATA MODULATION. WHEN THE COMMAND CHANNEL PN MODULATION IS INHIBITED THE DATA SHALL DIRECTLY BPSK MODULATE THE TRANSMITTED CARRIER ± π/2 RADIANS.

[2]SHUTTLE PN CHIP RATE AND CARRIER FREQUENCY ARE INDEPENDENT. PN CHIP RATE AND CARRIER FREQUENCY SHALL BE AS SCHEDULED. CAPABILITY TO INDEPENDENTLY DOPPLER COMPENSATE THE PN CHIP RATE AND CARRIER FREQUENCY AND TO INDEPENDENTLY INHIBIT DOPPLER COMPENSATION SHALL BE PROVIDED.

Table 5-11. Signal Constraint Requirements for SSAF Service Equipment[1]

PARAMETER	REQUIREMENT
A. COMMAND CHANNEL RADIATED POWER / RANGE CHANNEL RADIATED POWER	10 ± 0.5 dB
B. MODULATOR GAIN IMBALANCE (PEAK)	± 0.25 dB
C. RELATIVE PHASE BETWEEN COMMAND AND RANGE CHANNELS (PEAK)	90 ± 3°
D. DATA ASYMMETRY (PEAK)[2]	± 3%
E. DATA TRANSITION TIME (90% OF INITIAL STATE TO 90% OF FINAL STATE)[2]	≤ 5% OF DATA BIT DURATION
F. PHASE NONLINEARITY (PEAK), BEST STRAIGHT LINE (BSL)	± 4.25° OVER ± 7.0 MHz
G. GAIN FLATNESS (PEAK), RSS	± 0.4 dB OVER ± 7.0 MHz
H. GAIN SLOPE (PEAK)	± 0.1 dB/MHz OVER ± 7.0 MHz

Table 5-11. Signal Constraint Requirements for SSAF Service Equipment[1] (Continued)

I. AM/AM	≥ 0.0 AND ≤ 1.0 dB/dB
J. AM/PM	≤ 5°/dB
K. PN CODE CHIP JITTER (RMS) (INCLUDING EFFECTS OF DOPPLER COMPENSATION)	≤ 1°
L. DATA BIT JITTER (PEAK)[2]	≤ 1%
M. SPURIOUS PM (RMS)	≤ 0.8° OVER ± 10.0 MHz
N. SPURIOUS OUTPUTS (SUM OF ALL IN-BAND SPURS FROM ALL TRANSMIT SOURCES)	≥ 30 dBc OVER ± 10.0 MHz
O. INCIDENTAL AM (PEAK)[3] (EXCLUDING TWT HPA IONIC RELAXATION PULSES)	≤ 1.5% OVER ± 10.0 MHz
P. PHASE NOISE (RMS) - TOTAL 1 Hz - 10 Hz 10 Hz - 32 Hz 32 Hz - 1 kHz 1 kHz - 10 MHz	 ≤ 1.4° ≤ 1.4° ≤ 3.9° ≤ 1.0°
Q. PHASE NOISE (RMS) - COMPONENT NOT COHERENT WITH TTCS PILOT SIGNAL 1 Hz - 10 Hz 10 Hz - 32 Hz 32 Hz - 1 kHz 1 kHz - 10 MHz	 ≤ 0.8° ≤ 0.7° ≤ 1.8° ≤ 1.0°
R. COMMAND/RANGE CHANNEL PN CODE CHIP SKEW (PEAK)	≤ 0.01 CHIP
S. PN CODE CHIP ASYMMETRY (PEAK)	≤ 0.01 CHIP
T. PN CODE CHIP RATE (PEAK) RELATIVE TO ABSOLUTE COHERENCE WITH CARRIER RATE	≤ 0.01 CHIPS/SEC AT PN CODE CHIP RATE

NOTES

[1]SIGNAL CONSTRAINT DEFINITIONS ARE PROVIDED IN 530-SNUG (APPENDIX E).

[2]THESE VALUES ARE THE SGLT CONTRIBUTIONS TO DATA ASYMMETRY, DATA TRANSITION TIME, AND DATA BIT JITTER, ASSUMING PERFECT FORWARD SERVICE USS INPUT DATA.

[3]INCIDENTAL AM PULSES DUE TO TWT HPA IONIC RELAXATION SHALL BE LESS THAN 10 MILLISECONDS IN DURATION AND 1.5% (PEAK) IN AMPLITUDE. THEREFORE, THE WORST CASE TOTAL VALUE FOR INCIDENTAL AM WILL BE LESS THAN 3% (PEAK).

Table 5-12. SSAF Signal Performance Requirements

PARAMETER	REQUIREMENT
A. RF CARRIER FREQUENCY, F_O	SSA1 14679.5 MHz SSA2 14719.5 MHz
B. RF BANDWIDTH (1.0 dB)	20 MHz MINIMUM, EACH CHANNEL
C. OUTPUT CARRIER FREQUENCY AND PHASE STABILITY	CARRIER FREQUENCY STABILITY SHALL BE DETERMINED BY THE CTFS. THE CARRIERS SHALL BE PHASE COHERENT WITH THE CTFS FREQUENCY STANDARD TO THE EXTENT SPECIFIED IN THE SPECIFICATIONS GOVERNING PHASE NOISE.
D. OUTPUT CARRIER POWER LEVEL STABILITY	± 0.5 dB PER 24 HOURS
E. CARRIER AND PN CODE FREQUENCY GENERATION	RF CARRIER AND PN CODE CLOCK SHALL BE COHERENTLY DERIVED FROM THE CTFS
F. SIGNAL-TO-NOISE RATIO (THERMAL)	≥ 43 dB IN RF BANDWIDTH
G. OUT-OF-BAND-SPURS	GREATER THAN OR EQUAL TO 40 dB BELOW THE UNMODULATED CARRIER (UP TO 30 GHz)
H. EIRP (MINIMUM)	71.1 dBW
I. RADIATION IN KSAR BAND	THE COMMAND, PILOT, AND ALL USS FORWARD EQUIPMENT SHALL NOT RADIATE IN THE BAND 14850 TO 15149 MHz A TOTAL EIRP GREATER THAN THAT SHOWN IN FIGURE 5-11. DISCRETE SPURS IN THIS BAND SHALL EACH BE LESS THAN -12 dBWi. THE SUM OF ALL FORWARD SERVICES DISCRETE SPURS IN THIS BAND SHALL BE LESS THAN -2 dBWi.

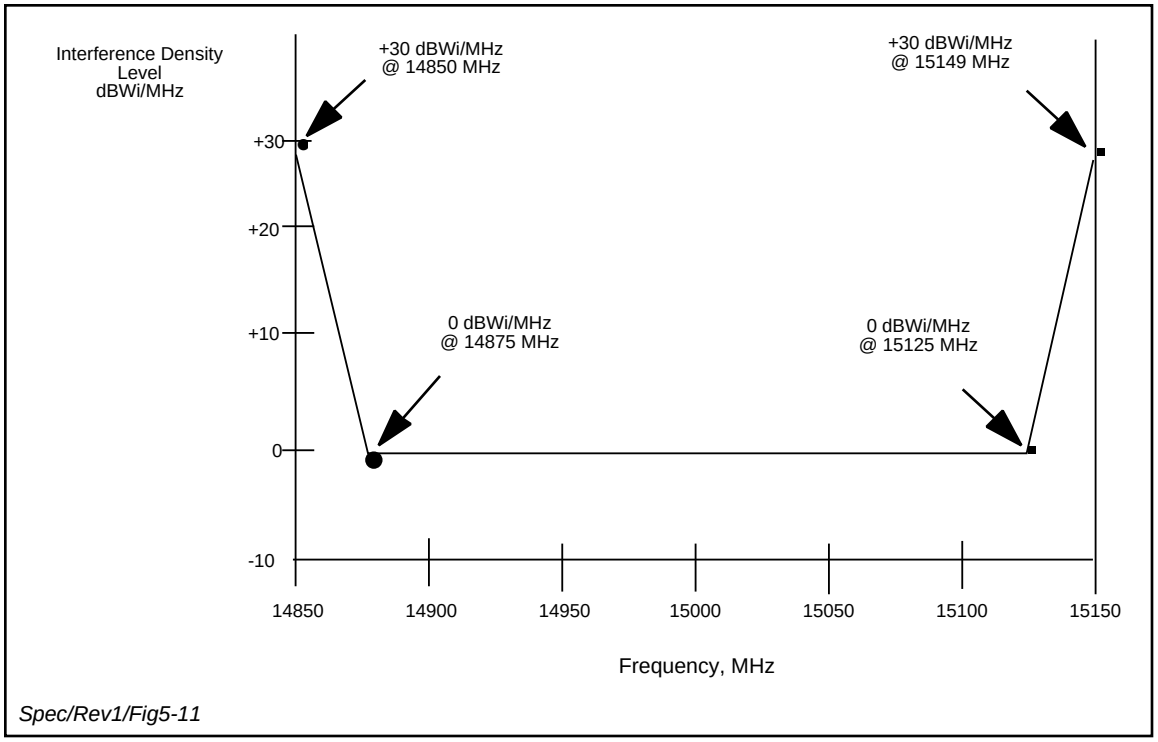

Figure 5-11. Radiated Interference Density Level Requirement in the KSAR Frequency Band from all USS Forward Service Equipment

5.3.1.3.1.4 Doppler Compensation

Doppler compensation requirements shall be as indicated below:

a. The frequency error (in Hz) after Doppler compensation shall be not more than 70 x $\ddot{R}$, for $\ddot{R} \leq 50$ m/sec^2 and $\dot{R} \leq 12$ km/sec; $\dot{R}$ and $\ddot{R}$ are the customer spacecraft velocity and acceleration, respectively, relative to the assigned TDRS.

b. Doppler compensation shall not be required for $\dot{R} > 12$ km/sec.

c. The command frequency compensation shall be represented by a straight line (linear chord) plot of frequency vs. time, using a series of phase-continuous frequency steps.

d. The maximum forward carrier frequency and PN chip rate compensation, provided by the SGLT (exclusive of acquisition sweep requirements below) shall be as indicated in Table 5-13.

e. The forward link Doppler compensation shall follow a command profile which can accommodate any combination of the full range of parameters in Table 5-13.

Table 5-13. SSAF and SSHF Doppler Compensation Requirements

MAXIMUM CARRIER FREQUENCY DYNAMICS BEFORE COMPENSATION				PN CHIP RATE DYNAMICS BEFORE COMPENSATION		
SERVICE	MAXIMUM DOPPLER kHz	MAX FREQ. RATE Hz/sec	MAX FREQ. ACCELERATION Hz/sec^2	MAXIMUM DOPPLER kchip/sec	MAX FREQ. RATE chip/sec^2	MAX FREQ. ACCELERA-TION chip/sec^3
SSA	± 85	± 360	± 15	± 0.13	± 0.53	± 0.022
SSH	± 85	± 360	± 15	± 0.48	± 1.9	± 0.08

NOTE

BASED ON: $\dot{R}$ = 12 km/sec
$\ddot{R}$ = 50 m/sec^2
$\dddot{R}$ = 2 m/sec^3

f. Forward link carrier and PN sweep (when commanded) shall be linear from an initial value of F_o - 3 kHz to a final value of F_o + 3 kHz in 120 sec, and chip rate from - 4.4 chips/sec to + 4.4 chips/sec; F_o is the nominal RF carrier frequency (i.e., 14.6795 GHz for SSA1 and 14.7195 GHz for SSA2). The sweep shall not impact Doppler compensation requirements.

g. SSAF and SSHF carrier Doppler compensation shall not increase the effective frequency rate of change seen at the customer spacecraft more than 28 Hz/sec relative to the frequency for a Doppler-free carrier.

h. For SSHF service support, the PN chip rate error (in chips/sec) after Doppler compensation shall not be more than $\ddot{R}/10$.

i. SSHF chip rate Doppler compensation shall not increase the peak phase error of a receiver (with dedicated early and late correlation channels and a B_L = 0.1 Hz) tracking the arriving PN chip by more than 3° relative to the phase error for a Doppler-free PN chip rate.

5.3.1.3.1.5 SSAF IF Interface Ports

a. Unmodulated IF Carrier Output Port. To extract the unmodulated IF carrier, an IF interface port shall be provided with the performance requirements specified in Table 5-14.

b. Modulated IF Carrier Input Port. To inject a modulated IF carrier, an IF interface port shall be provided with the performance requirements specified in Table 5-15.

Table 5-14. SSAF IF Output Port (Unmodulated IF)

A. FREQUENCY	369.5 MHz
B. OUTPUT IMPEDANCE	50 OHMS
C. VSWR	1.3:1 MAX, OVER 369.5 MHz ± 2.5 MHz
D. OUTPUT SIGNAL LEVEL	-15 dBM, ± 3 dB
E. SPURIOUS SIGNALS: SUM OF ALL SPURIOUS SIGNALS WITHIN OPERATION BANDWIDTH INDIVIDUAL SPURIOUS SIGNALS	 ≥ 30 dB BELOW DESIRED SIGNAL ≥ 40 dB BELOW DESIRED SIGNAL

Table 5-15. SSAF IF Input Port (Modulated IF)

A. CENTER FREQUENCY	369.5 MHz
B. INPUT BANDWIDTH (MINIMUM)	20 MHz
C. INPUT IMPEDANCE	50 OHMS
D. VSWR	1.3:1 MAX, OVER 369.5 MHz ± 10 MHz
E. INPUT SIGNAL LEVEL	-10 dBM, ± 3 dB
F. SPURIOUS SIGNALS: SUM OF ALL SPURIOUS SIGNALS WITHIN OPERATION BANDWIDTH INDIVIDUAL SPURIOUS SIGNALS	 ≥ 30 dB BELOW DESIRED SIGNAL ≥ 40 dB BELOW DESIRED SIGNAL

5.3.1.3.1.6 Performance Measuring and Monitoring Support

a. Status Measuring and Monitoring. During service, the SSAF equipment shall provide equipment and service performance status data to the USS ADPE Subsystem every second. This data shall include the following:

1. Service Performance Parameters.

   (a) PN Modulation.

   (b) Carrier Frequency.

   (c) Customer Command/Range Channel Power.

2. Equipment Status.

   (a) Power Supply Status.

   (b) Power Settings.

3. Data Presence Monitoring. Continuously monitor the data and clock channels to determine:

   (a) Clock Presence.

   (b) Data Transition Density.

b. Front Panel Capabilities. To support the MTG requirements, all equipment, down to the LRU level, shall incorporate front panel controls, status indicators, and test and monitoring points including:

   1. Visual on/off status indication.

   2. Visual prime-redundant status indication.

   3. Access to input/output baseband, IF and RF signals and selected voltage levels.

   4. All status provided to the USS ADPE Subsystem.

   5. ON/OFF controls.

   6. Test mode selects.

c. BIT/BITE Monitoring. Provide BIT/BITE monitoring data to the USS ADPE Subsystem.

5.3.1.3.2 KSAF Equipment

The performance of the KSAF equipment shall be as specified below.

5.3.1.3.2.1 Signal Parameters

The KSAF service chain shall provide a forward link signal with the signal parameters as specified in Tables 5-16 (KSAF) and 5-17 (KSHF).

Table 5-16. KSAF Service Signal Parameters

A. RATIO OF COMMAND CHANNEL POWER TO RANGE CHANNEL POWER	10 dB
B. RANGE CHANNEL[1]	
1. CARRIER FREQUENCY	COMMAND CHANNEL CARRIER FREQUENCY DELAYED π/2 RADIANS
2. PN MODULATION	PSK, ± π/2 RADIANS
3. CARRIER SUPPRESSION	30 dB MINIMUM
4. PN CHIP RATE	$\frac{31}{1469 \times 96} \times K_F$ SYNCHRONOUS WITH COMMAND CHANNEL PN CODE CHIP RATE (≈ 3M CHIPS/SEC)
5. PN CODE LENGTH	$(2^{10}-1) \times 256$ CHIPS

Table 5-16. KSAF Service Signal Parameters (Continued)

6. PN CODE EPOCH REFERENCE	ALL 1'S CONDITION SYNCHRONIZED TO THE COMMAND CHANNEL PN CODE EPOCH
7. PN CODE FAMILY	TRUNCATED 18-STAGE SHIFT REGISTER SEQUENCES; PER STDN No. 108
C. <u>COMMAND CHANNEL</u>	
1. CARRIER FREQUENCY	SGLT TRANSMIT CARRIER FREQUENCY
2. PN MODULATION[2]	PSK, ± π/2 RADIANS
3. CARRIER SUPPRESSION	30 dB MINIMUM
4. PN CODE LENGTH	2^{10}-1 CHIPS
5. PN CODE FAMILY	GOLD CODES; PER STDN No. 108
6. PN CHIP RATE[3] (CHIPS/SEC)	$\frac{31}{1469 \times 96} \times K_F$ (≈ 3M CHIPS/SEC)
7. DATA FORMAT	NRZ-L, NRZ-M, NRZ-S
8. DATA RATE[5]	1 kbps TO 25 Mbps
9. DATA MODULATION	MODULO-2 ADDED ASYNCHRONOUSLY TO PN CODE

NOTES

[1]FOR DATA RATES > 300 kbps, THE RANGE CHANNEL SHALL BE INHIBITED.

[2]THE COMMAND CHANNEL PN MODULATION SHALL BE INHIBITED FOR DATA RATES EXCEEDING 300 kbps.

[3]K_F IS THE TDRS TO CUSTOMER FREQUENCY. K_F = 13.775 ± 0.7 MHz.

[4]WHEN THE DATA CLOCK SIGNAL IS CLAMPED TO A LOGICAL-1 STATE, THE CARRIER SHALL CONTAIN NO DATA MODULATION. WHEN THE COMMAND CHANNEL PN MODULATION IS INHIBITED THE DATA SHALL DIRECTLY BPSK MODULATE THE TRANSMITTED CARRIER ± π/2 RADIANS.

[5]FOR DATA RATES LESS THAN 300 kbps, THE KSAF SERVICE CHAIN SHALL BE CAPABLE OF ACCOMMODATING ANY CHANGE TO THE ACTUAL INPUT DATA RATE WITHOUT THE SGLT BEING NOTIFIED OF THE CHANGE BY THE NCC.

Table 5-17. KSHF Service Signal Parameters

A. PN MODULATION[2]	PSK, ± π/2 RADIANS
B. CARRIER SUPPRESSION	30 dB MINIMUM
C. PN CODE LENGTH	2^{10} -1 CHIPS
D. PN CODE FAMILY	GOLD CODES; PER STDN No. 108
E. PN CHIP RATE[3]	$\frac{31}{1469 \times 96} \times K_F$ (≈ 3M CHIPS/SEC)

Table 5-17. KSHF Service Signal Parameters (Continued)

F. DATA FORMAT	NRZ INPUT DATA SHALL BE CONVERTED TO Biφ-L FORMAT
G. DATA RATE	72 kbps AND 216 kbps
H. DATA MODULATION[4]	MODULO-2 ADDED ASYNCHRONOUSLY TO PN CODE

NOTES

[1]FOR DATA RATES > 300 kbps, THE RANGE CHANNEL SHALL BE INHIBITED.

[2]THE COMMAND CHANNEL PN MODULATION SHALL BE INHIBITED FOR DATA RATES EXCEEDING 300 kbps.

[3]K_F IS THE TDRS TO CUSTOMER FREQUENCY. K_F = 13.775 ± 0.7 MHz.

[4]WHEN THE DATA CLOCK SIGNAL IS CLAMPED TO A LOGICAL-1 STATE, THE CARRIER SHALL CONTAIN NO DATA MODULATION. WHEN THE COMMAND CHANNEL PN MODULATION IS INHIBITED THE DATA SHALL DIRECTLY BPSK MODULATE THE TRANSMITTED CARRIER ± π/2 RADIANS.

[5]FOR DATA RATES LESS THAN 300 kbps, THE KSAF SERVICE CHAIN SHALL BE CAPABLE OF ACCOMMODATING ANY CHANGE TO THE ACTUAL INPUT DATA RATE WITHOUT THE SGLT BEING NOTIFIED OF THE CHANGE BY THE NCC.

5.3.1.3.2.2 Forward Signal Constraints

The KSAF service chain shall provide a KSAF signal which meets the signal constraint requirements of Table 5-18; these characteristics are defined at the output of the USS.

Table 5-18. Signal Constraint Requirements for KSAF Service Equipment[1]

PARAMETER	REQUIREMENT
A. COMMAND CHANNEL RADIATED POWER / RANGE CHANNEL RADIATED POWER	10 ± 0.5 dB
B. MODULATOR GAIN IMBALANCE (PEAK)	± 0.25 dB
C. RELATIVE PHASE BETWEEN COMMAND AND RANGE CHANNELS (PEAK)	90 ± 3°
D. DATA ASYMMETRY (PEAK)[2]	± 3%
E. DATA TRANSITION TIME (90% OF INITIAL STATE TO 90% OF FINAL STATE)[2]	≤ 5% OF DATA BIT DURATION BUT NOT LESS THAN 4 NSEC
F. PHASE NONLINEARITY (PEAK), BEST STRAIGHT LINE (BSL)	± 4.25° OVER ± 17.5 MHz
G. GAIN FLATNESS (PEAK), RSS	± 0.4 dB OVER ± 17.5 MHz
H. GAIN SLOPE (PEAK)	± 0.1 dB/MHz OVER ± 17.5 MHz
I. AM/AM	≥ 0.0 AND ≤ 1.0 dB/dB

Table 5-18. Signal Constraint Requirements for KSAF Service Equipment[1] (Continued)

J. AM/PM	≤ 5°/dB
K. PN CODE CHIP JITTER (RMS) (INCLUDING EFFECTS OF DOPPLER COMPENSATION)	≤ 1°
L. DATA BIT JITTER (PEAK)[2]	≤ 1%
M. SPURIOUS PM (RMS)	≤ 0.8° OVER ± 25.0 MHz
N. SPURIOUS OUTPUTS (SUM OF ALL IN-BAND SPURS FROM ALL TRANSMIT SOURCES)	≥ 30 dBc OVER ± 25.0 MHz
O. INCIDENTAL AM (PEAK)[3] (EXCLUDING TWT HPA IONIC RELAXATION PULSES)	≤ 1.5% OVER ± 25.0 MHz
P. PHASE NOISE (RMS) - TOTAL 1 Hz - 10 Hz 10 Hz - 32 Hz 32 Hz - 1 kHz 1 kHz - 25 MHz	 ≤ 1.4° ≤ 1.4° ≤ 3.9° ≤ 1.0°
Q. PHASE NOISE (RMS) - COMPONENT NOT COHERENT WITH TTCS PILOT SIGNAL 1 Hz - 10 Hz 10 Hz - 32 Hz 32 Hz - 1 kHz 1 kHz - 25 MHz	 ≤ 0.8° ≤ 0.7° ≤ 1.8° ≤ 1.0°
R. COMMAND/RANGE CHANNEL PN CODE CHIP SKEW (PEAK)	≤ 0.01 CHIP
S. PN CODE CHIP ASYMMETRY (PEAK)	≤ 0.01 CHIP
T. PN CODE CHIP RATE (PEAK) RELATIVE TO ABSOLUTE COHERENCE WITH CARRIER RATE	≤ 0.01 CHIPS/SEC AT PN CODE CHIP RATE

NOTES

[1]SIGNAL CONSTRAINT DEFINITIONS ARE PROVIDED IN 530-SNUG (APPENDIX E).

[2]THESE VALUES ARE THE SGLT CONTRIBUTIONS TO DATA ASYMMETRY, DATA TRANSITION TIME, AND DATA BIT JITTER, ASSUMING PERFECT FORWARD SERVICE USS INPUT DATA.

[3]INCIDENTAL AM PULSES DUE TO TWT HPA IONIC RELAXATION SHALL BE LESS THAN 10 MILLISECONDS IN DURATION AND 1.5% (PEAK) IN AMPLITUDE. THEREFORE, THE WORST CASE TOTAL VALUE FOR INCIDENTAL AM WILL BE LESS THAN 3% (PEAK).

5.3.1.3.2.3 Additional KSAF Signal Requirements

The KSAF service chain, in conjunction with the Antenna Subsystem, shall satisfy the additional performance requirements of Table 5-19.

Table 5-19. KSAF Signal Performance Requirements

PARAMETER	REQUIREMENT
A. RF CARRIER FREQUENCY, F_O	KSA1 14625.0 MHz KSA2 15200.0 MHz
B. RF BANDWIDTH (1.0 dB)	50 MHz MINIMUM, EACH CHANNEL
C. OUTPUT CARRIER FREQUENCY AND PHASE STABILITY	CARRIER FREQUENCY STABILITY SHALL BE DETERMINED BY THE CTFS. THE CARRIERS SHALL BE PHASE COHERENT WITH THE CTFS FREQUENCY STANDARD TO THE EXTENT SPECIFIED IN THE SPECIFICATIONS GOVERNING PHASE NOISE.
D. OUTPUT CARRIER POWER LEVEL STABILITY	± 0.5 dB PER 24 HOURS
E. CARRIER AND PN CODE FREQUENCY GENERATION	RF CARRIER AND PN CODE CLOCK SHALL BE COHERENTLY DERIVED FROM THE CTFS
F. SIGNAL-TO-NOISE RATIO (THERMAL)	≥ 43 dB IN RF BANDWIDTH
G. OUT-OF-BAND-SPURS	GREATER THAN OR EQUAL TO 40 dB BELOW THE UNMODULATED CARRIER (UP TO 30 GHz)
H. EIRP (MINIMUM) •A. DANZANTE •B. CACIQUE	 75.9 dBW 73.5 dBW
I. RADIATION IN KSAR BAND	THE COMMAND, PILOT, AND ALL USS FORWARD EQUIPMENT SHALL NOT RADIATE IN THE BAND 14850 TO 15149 MHz A TOTAL EIRP GREATER THAN THAT SHOWN IN FIGURE 5-11. DISCRETE SPURS IN THIS BAND SHALL EACH BE LESS THAN -12 dBWi. THE SUM OF ALL FORWARD SERVICES DISCRETE SPURS IN THIS BAND SHALL BE LESS THAN -2 dBWi.

5.3.1.3.2.4 Doppler Compensation

Doppler compensation requirements shall be as indicated below:

a. The frequency error (in Hz) after Doppler compensation shall be not more than 500 x $\ddot{R}$, for $\ddot{R} \leq 15$ m/sec^2 and $\dot{R} \leq 12$ km/sec; $\dot{R}$ and $\ddot{R}$ are the customer spacecraft velocity and acceleration, respectively, relative to the assigned TDRS.

b. Doppler compensation shall not be required for $\dot{R} > 12$ km/sec.

c. The commanded frequency compensation shall be represented by a straight line (linear chord) plot of frequency vs. time, using a series of phase-continuous frequency steps.

d. The maximum forward carrier frequency and PN chip rate compensation, provided by the SGLT (exclusive of acquisition sweep requirements below) shall be as indicated in Table 5-20.

Table 5-20. KSAF and KSHF Doppler Compensation Requirements

MAXIMUM CARRIER FREQUENCY DYNAMICS BEFORE COMPENSATION			PN CHIP RATE DYNAMICS BEFORE COMPENSATION		
MAXIMUM DOPPLER kHz	MAX FREQ. RATE Hz/sec	MAX FREQ. ACCELERATION Hz/sec^2	MAXIMUM DOPPLER Kchip/sec	MAX FREQ. RATE chip/sec^2	MAX FREQ. ACCELERATION chip/sec^3
± 552	± 700	± 1.0	± 0.13	± 0.16	± 0.00022
NOTE BASED ON: $\dot{R}$ = 12 km/sec $\ddot{R}$ = 15 m/sec^2 $\dddot{R}$ = 0.02 m/sec^3					

e. The forward link Doppler compensation shall follow a commanded profile which can accommodate any combination of the full range of parameters in Table 5-20.

f. Forward link carrier and PN code sweep (when commanded) shall be linear from an initial value of F_o - 30 kHz to a final value of F_o + 30 kHz in 120 sec, and chip rate from - 6.6 chips/sec to + 6.6 chips/sec; F_o is the nominal RF carrier frequency (i.e., 14.625 GHz for KSA1 and 15.200 GHz for KSA2). The sweep shall not impact Doppler compensation requirements.

g. KSAF Doppler compensation shall not increase the effective frequency rate of change seen at the customer spacecraft more than 330 Hz/sec relative to the frequency for a Doppler-free carrier.

5.3.1.3.2.5 KSAF IF Interface Port

a. Unmodulated IF Carrier Output Port. To extract the unmodulated IF carrier, an IF interface port shall be provided with the performance requirements specified in Table 5-21.

b. Modulated IF Carrier Input Port. To inject a modulated IF carrier, an IF interface port shall be provided with the performance requirements specified in Table 5-22.

Table 5-21. KSAF IF Output Port (Unmodulated IF)

A. FREQUENCY	370 MHz
B. OUTPUT IMPEDANCE	50 OHMS
C. VSWR	1.3:1 MAX, OVER 370 MHz ± 2.5 MHz
D. OUTPUT SIGNAL LEVEL	-15 dBM, ± 3 dB
E. SPURIOUS SIGNALS: SUM OF ALL SPURIOUS SIGNALS WITHIN OPERATING BANDWIDTH INDIVIDUAL SPURIOUS SIGNALS	≥ 30 dB BELOW DESIRED SIGNAL ≥ 40 dB BELOW DESIRED SIGNAL

Table 5-22. KSAF IF Input Port (Modulated IF)

A. CENTER FREQUENCY	370 MHz
B. INPUT BANDWIDTH (MINIMUM)	50 MHz
C. INPUT IMPEDANCE	50 OHMS
D. VSWR	1.3:1 MAX, OVER 370 MHz ± 20 MHz
E. INPUT SIGNAL LEVEL	-10 dBM, ± 3 dB
F. SPURIOUS SIGNALS: SUM OF ALL SPURIOUS SIGNALS WITHIN OPERATING BANDWIDTH INDIVIDUAL SPURIOUS SIGNALS	≥ 30 dB BELOW DESIRED SIGNAL ≥ 40 dB BELOW DESIRED SIGNAL

5.3.1.3.2.6 Performance Measuring and Monitoring Support

a. Status Measuring and Monitoring. During service, the KSAF equipment shall provide equipment and service performance status data to the USS ADPE Subsystem every second. This data shall include the following:

1. Service Performance Parameters.

   (a) PN Modulation.

   (b) Carrier Frequency.

   (c) Customer Command/Range Channel Power.

2. Equipment Status.

   (a) Power Supply Status.

   (b) Power Settings.

3. Data Presence Monitoring. Continuously monitor the data and clock channels to determine:

(a) Clock Presence.

(b) Data Transition Density.

b. Format Panel Capabilities. To support the MTG requirements, all equipment, down to the LRU level, shall incorporate front panel controls, status indicators, and test and monitoring points that include:

1. Visual on/off status indication.
2. Visual prime-redundant status indication.
3. Access to input/output baseband, IF and RF signals and selected voltage levels.
4. All status provided to the USS ADPE Subsystem.
5. ON/OFF Controls.
6. Test mode selects.

c. BIT/BITE Monitoring. Provide BIT/BITE monitoring data to the USS ADPE Subsystem.

5.3.1.3.3 MAF Equipment

The performance of the MAF equipment shall be as specified below.

5.3.1.3.3.1 Signal Parameters

The MAF service chain shall provide a signal with parameters as specified in Table 5-23.

Table 5-23. MAF Service Signal Parameters

A. RATIO OF COMMAND CHANNEL POWER TO RANGE CHANNEL POWER	10 dB
B. RANGE CHANNEL	
1. CARRIER FREQUENCY	COMMAND CHANNEL CARRIER FREQUENCY DELAYED $\pi/2$ RADIANS
2. PN MODULATION	PSK, $\pm \pi/2$ RADIANS
3. CARRIER SUPPRESSION	30 dB MINIMUM
4. PN CHIP RATE	$\frac{31}{221 \times 96} \times K_F$ ($\approx$ 3M CHIPS/SEC) SYNCHRONOUS WITH COMMAND CHANNEL PN CODE CHIP RATE
5. PN CODE LENGTH	$(2^{10} - 1) \times 256$ CHIPS
6. PN CODE EPOCH REFERENCE	PN CODE EPOCH (ALL 1'S CONDITION) SYNCHRONIZED TO THE COMMAND CHANNEL PN CODE EPOCH
7. PN CODE FAMILY	TRUNCATED 18-STAGE SHIFT REGISTER SEQUENCES; PER STDN 108

Table 5-23. MAF Service Signal Parameters (Continued)

C. COMMAND CHANNEL	
1. CARRIER FREQUENCY	SGLT TRANSMIT CARRIER FREQUENCY
2. PN MODULATION	PSK, ± π/2 RADIANS
3. CARRIER SUPPRESSION	30 dB MINIMUM
4. PN CODE LENGTH	2^{10} -1 CHIPS
5. PN CODE FAMILY	GOLD CODES; PER STDN 108
6. PN CHIP RATE[1] (CHIPS/SEC)	$\frac{31}{221 \times 96} \times K_F$ (≈ 3M CHIPS/SEC)
7. DATA FORMAT	NRZ-L, NRZ-M, NRZ-S
8. DATA RATE[2]	0.1 TO 10 kbps
9. DATA MODULATION	MODULO-2 ADDED ASYNCHRONOUSLY TO PN CODE

NOTES

[1]K_F IS THE TDRS-TO-CUSTOMER FREQUENCY. $K_F = 2287.5 \pm 0.1 \text{ MHz} \left(\frac{221}{240}\right)$

[2]THE MAF SERVICE CHAIN SHALL BE CAPABLE OF ACCOMMODATING ANY CHANGE TO THE ACTUAL INPUT DATA RATE WITHOUT THE SGLT BEING NOTIFIED OF THE CHANGE BY THE NCC.

5.3.1.3.3.2 Forward Signal Constraints

The MAF service chain shall provide a MAF signal which meets the signal constraint requirements of Table 5-24; these characteristics are defined at the output of the USS.

Table 5-24. Signal Constraint Requirements for MAF Service Equipment[1]

PARAMETER	REQUIREMENT
A. COMMAND CHANNEL RADIATED POWER RANGE CHANNEL RADIATED POWER	10 ± 0.5 dB
B. MODULATOR GAIN IMBALANCE (PEAK)	± 0.25 dB
C. RELATIVE PHASE BETWEEN COMMAND AND RANGE CHANNELS (PEAK)	90 ± 3°
D. DATA ASYMMETRY (PEAK)[2]	± 3%
E. DATA TRANSITION TIME (90% OF INITIAL STATE TO 90% OF FINAL STATE)[2]	≤ 5% OF DATA BIT DURATION
F. PHASE NONLINEARITY (PEAK), BEST STRAIGHT LINE (BSL)	± 4.25° OVER ± 2.1 MHz

Table 5-24. Signal Constraint Requirements for MAF Service Equipment[1] (Cont'd)

G. GAIN FLATNESS (PEAK), RSS	± 0.4 dB OVER ± 2.1 MHz
H. GAIN SLOPE (PEAK)	± 0.1 dB/MHz OVER ± 2.1 MHz
I. AM/AM	≥ 0.0 AND ≤ 1.0 dB/dB
J. AM/PM	≤ 4°/dB
K. PN CODE CHIP JITTER (RMS) (INCLUDING EFFECTS OF DOPPLER COMPENSATION)	≤ 1°
L. DATA BIT JITTER (PEAK)[2]	≤ 1%
M. SPURIOUS PM (RMS)	≤ 0.8° OVER ± 3.0 MHz
N. SPURIOUS OUTPUTS (SUM OF ALL IN-BAND SPURS FROM ALL TRANSMIT SOURCES)	≥ 30 dBc OVER ± 3.0 MHz
O. INCIDENTAL AM (PEAK)	≤ 1.4% OVER ± 3.0 MHz
P. PHASE NOISE (RMS) - TOTAL 1 Hz - 10 Hz 10 Hz - 32 Hz 32 Hz - 1 kHz 1 Hz - 3 MHz	 ≤ 1.4° ≤ 1.4° ≤ 3.9° ≤ 1.0°
Q. PHASE NOISE (RMS) - COMPONENT NOT COHERENT WITH TTCS PILOT SIGNAL 1 Hz - 10 Hz 10 Hz - 32 Hz 32 Hz - 1 kHz 1 kHz - 3 MHz	 ≤ 0.8° ≤ 0.7° ≤ 1.8° ≤ 1.0°
R. COMMAND/RANGE CHANNEL PN CODE CHIP SKEW (PEAK)	≤ 0.01 CHIP
S. PN CODE CHIP ASYMMETRY (PEAK)	≤0.01 CHIP
T. PN CODE CHIP RATE (PEAK) RELATIVE TO ABSOLUTE COHERENCE WITH CARRIER RATE	≤ 0.01 CHIPS/SEC AT PN CODE CHIP RATE

NOTES

[1]SIGNAL CONSTRAINT DEFINITIONS ARE PROVIDED IN 530-SNUG, (APPENDIX E).

[2]THESE VALUES ARE THE SGLT CONTRIBUTIONS TO DATA ASYMMETRY, DATA TRANSITION TIME, AND DATA BIT JITTER, ASSUMING PERFECT FORWARD SERVICE USS INPUT DATA.

5.3.1.3.3.3 Additional MAF Signal Requirements

The MAF service chain, in conjunction with the Antenna Subsystem shall satisfy the additional performance requirements of Table 5-25.

Table 5-25. MAF Signal Performance Requirements

PARAMETER	REQUIREMENT
A. RF CARRIER FREQUENCY, F_O	14826.4 MHz
B. RF BANDWIDTH (1.0 dB)	6 MHz, MINIMUM
C. OUTPUT CARRIER FREQUENCY AND PHASE STABILITY	CARRIER FREQUENCY STABILITY SHALL BE DETERMINED BY THE CTFS. THE CARRIERS SHALL BE PHASE COHERENT WITH THE CTFS FREQUENCY STANDARD TO THE EXTENT SPECIFIED IN THE SPECIFICATIONS GOVERNING PHASE NOISE.
D. OUTPUT CARRIER POWER LEVEL STABILITY	± 0.5 dB PER 24 HOURS
E. CARRIER AND PN CODE FREQUENCY GENERATION	RF CARRIER AND PN CODE CLOCK SHALL BE COHERENTLY DERIVED FROM THE CTFS
F. SIGNAL-TO-NOISE RATIO (THERMAL)	≥ 43 dB IN RF BANDWIDTH
G. OUT-OF-BAND SPURS	GREATER THAN OR EQUAL TO 40 dB BELOW THE UNMODULATED CARRIER (UP TO 30 GHz)
H. EIRP (MINIMUM)	64.1 dBW
I. RADIATION IN KSAR BAND	THE COMMAND, PILOT, AND ALL USS FORWARD EQUIPMENT SHALL NOT RADIATE IN THE BAND 14850 TO 15149 MHz A TOTAL EIRP GREATER THAN THAT SHOWN IN FIGURE 5-11. DISCRETE SPURS IN THIS BAND SHALL EACH BE LESS THAN -12 dBWi. THE SUM OF ALL FORWARD SERVICES DISCRETE SPURS IN THIS BAND SHALL BE LESS THAN -2 dBWi.

5.3.1.3.3.4 Doppler Compensation

Doppler compensation requirements shall be as indicated below:

a. The frequency error (in Hz) after Doppler compensation shall be not more than 70 x $\ddot{R}$ for $\ddot{R} \leq 15$ m/sec^2 and $\dot{R} \leq 12$ km/sec.

b. Doppler compensation shall not be required for $\dot{R} > 12$ km/sec.

c. The commanded frequency compensation shall be represented by a straight line (linear chord) plot of frequency vs. time, using a series of phase-continuous frequency steps.

d. The maximum forward carrier frequency and PN chip rate compensation, provided by a SGLT (exclusive of acquisition sweep requirements below) shall be as indicated in Table 5-26.

Table 5-26. Doppler Compensation Requirements - MAF Services

MAXIMUM CARRIER FREQUENCY DYNAMICS BEFORE COMPENSATION			MAXIMUM PN CHIP RATE DYNAMICS BEFORE COMPENSATION		
MAXIMUM DOPPLER kHz	MAX FREQ. RATE Hz/SEC	MAX FREQ. ACCELERATION Hz/SEC^2	MAXIMUM DOPPLER kCHIP/SEC	MAX FREQ. RATE CHIP/SEC^2	MAX FREQ. ACCELERATION CHIP/SEC^3
± 85	± 110	± 0.15	± 0.13	± 0.16	± 0.00022
NOTE BASED ON: $\dot{R}$ = 12 km/sec $\ddot{R}$ = 15 m/sec^2 $\dddot{R}$ = 0.02 m/sec^3					

e. The forward link Doppler compensation shall follow a commanded profile which can accommodate any combination of the full range of parameters in Table 5-26.

f. Forward link carrier and PN sweep (when commanded) shall be linear from an initial value of F_o-3 kHz to a final value of F_o + 3 kHz in 120 sec, and chip rate from - 4.4 chips/sec to + 4.4 chips/sec; F_o is the nominal RF carrier frequency (i.e., 14826 MHz). The sweep shall not impact Doppler compensation requirements.

g. MAF Doppler compensation shall not increase the effective frequency rate seen at the customer spacecraft more than 28 Hz/sec relative to the frequency rate for a Doppler-free carrier.

5.3.1.3.3.5 Performance Measuring and Monitoring Support

a. Status Measuring and Monitoring. During service, the MAF equipment shall provide equipment and service performance status data to the USS ADPE Subsystem every second. This data shall include the following:

1. Service Performance Parameters.

   (a) PN Modulation.

   (b) Carrier Frequency.

   (c) Customer Command/Range Channel Power.

2. Equipment Status.

   (a) Power Supply Status.

   (b) Power Settings.

3. Data Presence Monitoring. Continuously monitor the data and clock channels to determine:

   (a) Clock Presence.

   (b) Data Transition Density.

b. Front Panel Capabilities. To support the MTG requirements, all equipment, down to the LRU level, shall incorporate front panel controls, status indicators, and test and monitoring points including:

   1. Visual on/off status indication.

   2. Visual prime-redundant status indication.

   3. Access to input/output baseband, IF and RF signals and selected voltage levels.

   4. All status provided to the USS ADPE Subsystem.

   5. ON/OFF controls.

   6. Test mode selects.

c. BIT/BITE Monitoring. Provide BIT/BITE monitoring data to the USS ADPE Subsystem.

5.3.1.4 Interfaces

USS SAF and MAF interfaces shall be as specified in Tables 5-27 and 5-28, respectively. Additional interfaces between the MA service equipment and the USS SSA service equipment shall be provided, as required, for cross support communications and tracking services.

Table 5-27. USS SAF Equipment Interfaces

FROM	TO	PARAMETER/SIGNAL
SAF EQUIPMENT	USS TRACKING EQUIPMENT	FORWARD PN EPOCH PULSE FORWARD PN CLOCK
CTFS	SAF EQUIPMENT	1 PPS TIME PULSES FREQUENCY STANDARD
DIS	SAF EQUIPMENT	BASEBAND CUSTOMER FORWARD DATA CUSTOMER DATA CLOCK SIGNAL
USS ADPE SUBSYSTEM	SAF EQUIPMENT	CONFIGURATION COMMANDS EQUIPMENT CONTROL
SAF EQUIPMENT	USS ADPE SUBSYSTEM	EQUIPMENT STATUS DATA SERVICE STATUS DATA DPM MEASUREMENT DATA

Table 5-27. USS SAF Equipment Interfaces (Continued)

PMMS	SAF EQUIPMENT	BASEBAND TEST SIGNALS
SAF EQUIPMENT	PMMS	FORWARD RF TEST SIGNALS
TTCS	RF POWER COMBINER	RF COMMAND/RANGE UPLINK RF UPLINK PILOT SIGNAL
RF POWER COMBINER	ANTENNA SUBSYSTEM	FDM UPLINK SIGNAL

Table 5-28. MAF Equipment Interfaces

FROM	TO	PARAMETER/SIGNAL
MAF EQUIPMENT	MA TRACKING EQUIPMENT	FORWARD PN EPOCH PULSE FORWARD PN CLOCK
CTFS	MAF EQUIPMENT	1 PPS TIME TICKS FREQUENCY STANDARD
DIS	MAF EQUIPMENT	BASEBAND CUSTOMER FORWARD DATA CUSTOMER CLOCK SIGNAL
MA USS ADPE SUBSYSTEM	MAF EQUIPMENT	CONFIGURATION COMMANDS EQUIPMENT CONTROL
MAF EQUIPMENT	MA ADPE SUBSYSTEM	EQUIPMENT STATUS DATA SERVICE STATUS DATA DPM MEASUREMENT DATA TRACKING DATA
PMMS	MAF EQUIPMENT	BASEBAND TEST DATA
MAF EQUIPMENT	PMMS	FORWARD RF TEST SIGNALS
MAF EQUIPMENT	USS RF POWER COMBINER	FDM UPLINK SIGNAL

5.3.2 Return Services

This section specifies USS requirements to support single access return (SAR) and multiple access return (MAR) customer services. The functional, performance, and interface requirements are specified in Sections 5.3.2.2, 5.3.2.3, and 5.3.2.4, respectively.

5.3.2.1 Overview and Architecture

This section provides an overview and architecture of the USS SAR and MAR equipment. S-band single access return (SSAR) equipment, K-band single access return (KSAR) equipment, and MAR equipment are specified in turn.

5.3.2.1.1 SSAR Overview and Architecture

The USS SSAR reference architecture is shown in Figure 5-12. Each of the two SSAR services per SGLT shall be provided by independent equipment chains capable of processing customer return service data from RF to baseband. The SSAR equipment chains shall also support range and Doppler tracking services (Section 5.3.3).

The USS shall include the capability for continuously monitoring, and periodically reporting, equipment status, performance status, and the quality of SSAR customer data during a scheduled service. Customer data quality assessment shall be accomplished by a dedicated set of equipment designated Data Quality Monitors (DQMs).

For each of the SSA-1R and SSA-2R services, the SSAR USS ground equipment shall include one prime equipment chain with a 100% redundant equipment chain. Each equipment chain shall be capable of supporting a normal customer service (SSAR) and a Shuttle customer service (SSHR), but not both simultaneously. Each such equipment chain shall be referred to as a SSAR service chain. The SSAR service chains shall receive a Ku-band signal from the RF Power Divider shown in Figure 5-12. The following architectural requirements shall apply:

a. For each of the SSA-1R and SSA-2R services, the USS ground equipment shall include one prime service chain with a 100% redundant service chain; the components of each service chain shall each be dedicated to either the prime or the redundant SSAR service chain, and shall not be interchanged between the service chains.

b. The SSA-1R and SSA-R2 service chains shall be completely independent (i.e., SSA-1R service chains (prime and redundant) shall not be interchanged with SSA-2R service chains (prime and redundant)).

c. SSA-1R service chains shall only be associated with SSA-1F service chains and not with SSA-2F service chains; SSA-2R chains shall only be associated with SSA-2F service chains and not with SSA-1F service chains.

d. The selection of prime and redundant return service chains shall be independent of the selection of prime and redundant forward service chains.

e. Each of the SSAR service chains shall be of identical design and shall be capable of receiving the input signals at the assigned frequency (SSA-1R or SSA-2R).

f. Each SSAR service chain shall be configurable to receive RF test signals from the PMMS and to distribute baseband output test signals to the PMMS.

g. Interfaces with the MA service equipment shall be provided as required to support cross support communications and tracking services.

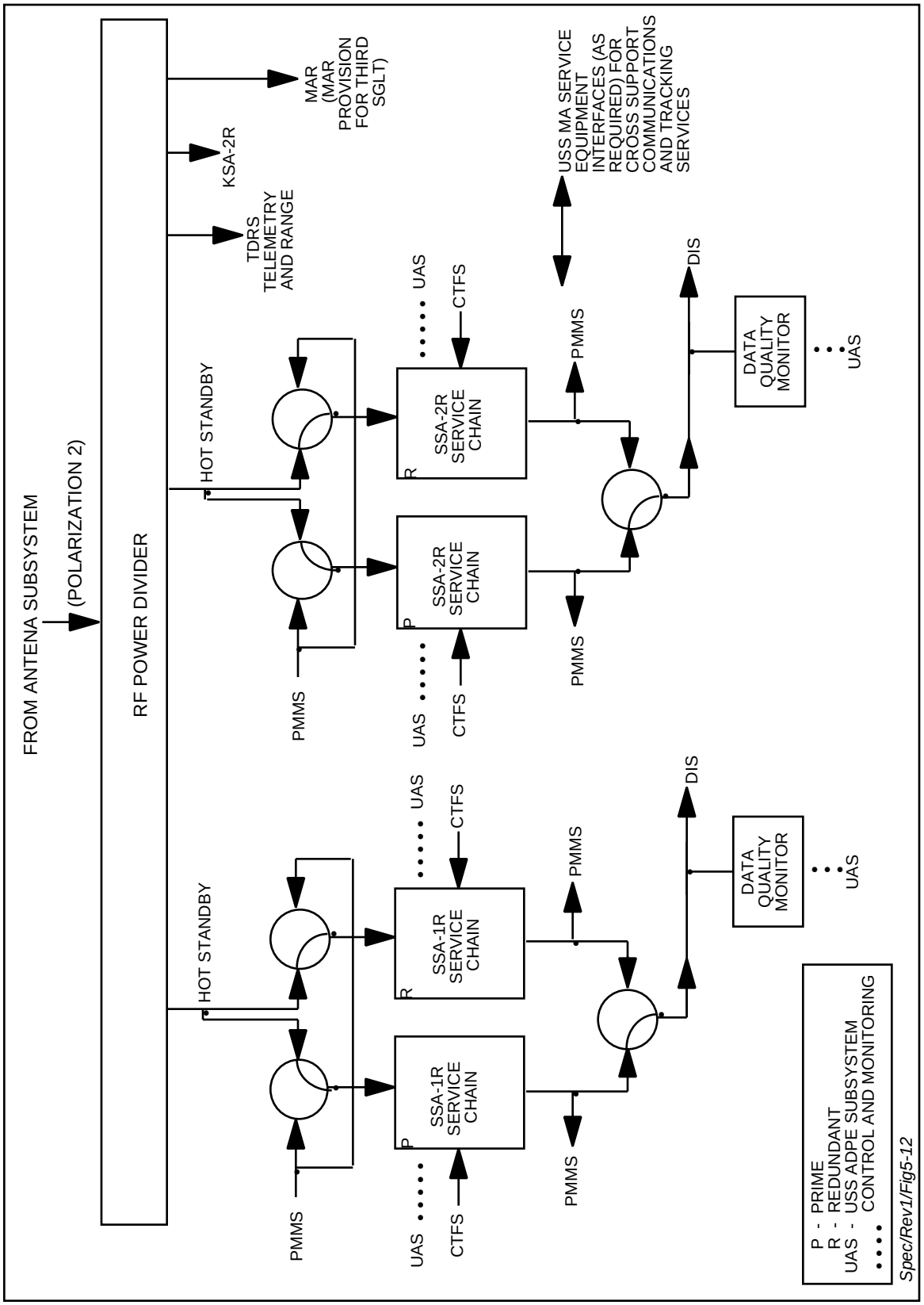

Figure 5-12. USS SSAR Reference Architecture

5.3.2.1.2 KSAR Overview and Architecture

The USS KSAR reference architecture is shown in Figure 5-13. Each of the two KSAR services per SGLT shall be provided by independent equipment chains capable of processing customer return service data from RF to baseband. The KSAR equipment chains shall also support range and Doppler tracking services (Section 5.3.3).

The USS shall include the capability for continuously monitoring, and periodically reporting, equipment status, service performance status, and the quality of KSAR customer data during a scheduled service. Customer data quality assessment shall be accomplished by dedicated Data Quality Monitors (DQMs).

For each of the KSA-1R and KSA-2R services, the KSAR USS ground equipment shall include one prime equipment chain with a 100% redundant equipment chain. Each equipment chain shall be capable of supporting a normal customer service (KSAR) and a Shuttle customer service (KSHR), but not both simultaneously. Each such equipment chain shall be referred to as a KSAR service chain. The KSA-2R service chains shall receive a Ku-band signal (polarization 2) from the RF Power Divider shown in Figure 5-13. The KSA-1R service chains shall receive a Ku-band signal (polarization 1) from the Antenna Subsystem. The following architectural requirements shall apply:

a. For each of the KSA-1R and KSA-2R services, the USS ground equipment shall include one prime service chain with a 100% redundant service chain; the components of each service chain shall each be dedicated to either the prime or the redundant KSAR service chain, and shall not be interchanged between the service chains.

b. The KSA-1R and KSA-2R service chains shall be completely independent (i.e., KSA-1R service chains (prime and redundant) shall not be interchanged with KSA-2R service chains (prime and redundant)).

c. KSA-1R service chains shall only be associated with KSA-1F service chains and not with KSA-2F service chains; KSA-2R chains shall only be associated with KSA-2F service chains and not with KSA-1F service chains.

d. The selection of prime and redundant return service chains shall be independent of the selection of prime and redundant forward service chains.

e. Each of the KSAR service chains shall be of identical design and shall be capable of receiving the input signals at the assigned frequency (KSA-1R or KSA-2R).

f. Each KSAR service chain shall be configurable to receive RF test signals from the PMMS and to distribute baseband output test signals to the PMMS.

g. The prime and redundant equipment to detect and process the TDRS KSA antenna-pointing error signals shall be dedicated to the prime and redundant KSAR service chains, respectively.

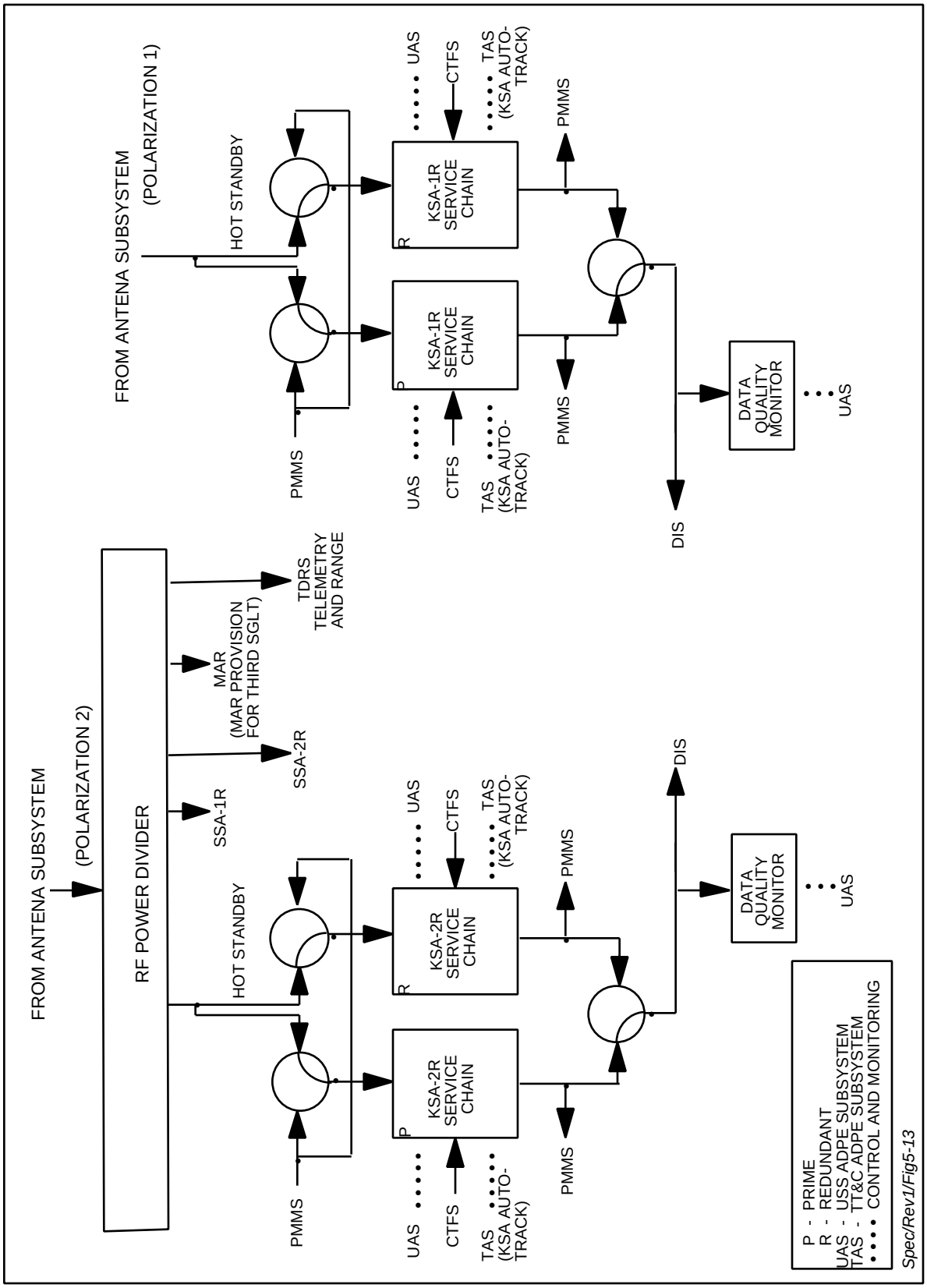

Figure 5-13. USS KSAR Reference Architecture

5.3.2.1.3 MAR Overview and Architecture

The USS MAR reference architecture for each Danzante and Cacique is shown in Figure 5-14. The GRGT USS MAR reference architecture is the same as depicted in Figure 5-14 but is only required to support two MAR links. The USS MAR ground equipment shall include a prime and a 100% redundant set (Danzante and Cacique only) of RF equipment to perform the function of element separation. Thirty Power Dividers with no redundancy shall be provided. MAR Signal Processors shall be provided to perform beamforming, despreading, demodulation, and decoding. MAR signal processors shall be provided to support up to five MAR links simultaneously at Danzante and Cacique and for two MAR links at GRGT. No redundant MAR Signal Processor chains are required. Baseband data output from the MAR Signal Processors shall be provided to the DIS.

The USS shall include the capability for continuously monitoring, and periodically reporting, equipment status, performance status, and the quality of MAR customer data during a scheduled service. Customer data quality assessment shall be accomplished by a dedicated set of equipment designated Data Quality Monitors (DQMs).

The following architectural requirements shall apply:

a. There shall be 100% redundancy for the Element Separator to provide prime and redundant element channels for each of the thirty elements (Danzante and Cacique only).

b. There shall be a dedicated Power Divider for each element channel with no redundancy required. Switch SW4 shall permit either the prime or redundant element channel out of the Element Separator to be connected to the associated Power Divider input. The selection of the prime or redundant element channel into a power divider shall be independent from channel to channel.

c. Any MAR Signal Processor shall be capable of being associated with the MAF service chains.

d. Each MAR Signal Processor shall be associated with a dedicated Doppler Extractor Unit.

e. Each MAR Signal Processor shall be configurable to receive test signals from the PMMS and to distribute both IF (after beamforming) and baseband output test signals to the PMMS.

f. Interfaces with the SSA service equipment shall be provided to support cross support communications and tracking services.

g. The frequencies employed in the element separation, weighting, and combining functions, shall be derived from the return telemetry carrier. All other frequencies in the down-conversion process shall be derived from the CTFS.

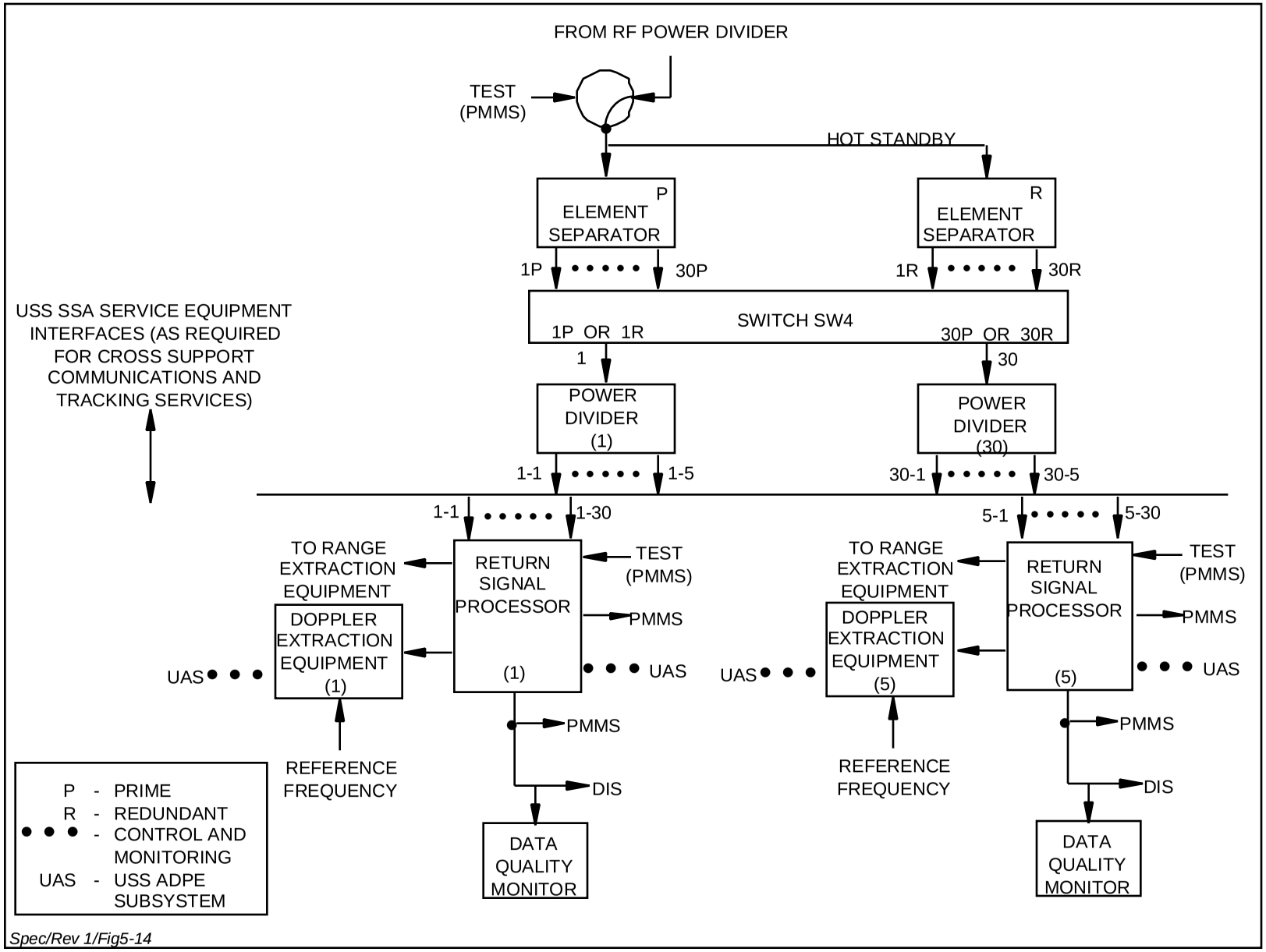

Figure 5-14. Danzante/Cacique MA USS Reference Architecture - MAR and Doppler Extraction Equipment

5.3.2.2 Functional Requirements

The functional requirements for the SAR and MAR equipment are divided as follows:

a. RF Power Divider.

b. SSAR Equipment.

c. KSAR Equipment.

d. MAR Equipment.

5.3.2.2.1 RF Power Divider

The RF Power Divider shall perform the following functions:

a. Receive the composite SGL signal (polarization 2) from the Antenna Subsystem.

b. Provide output signals for:

   1. TTCS Telemetry and Range.
   2. SSA-1R Service.
   3. SSA-2R Service.
   4. KSA-2R Service.
   5. MAR Service.

5.3.2.2.2 SSAR Equipment

Figure 5-15 is a functional diagram of a SSAR service chain. Each SSA-1R and SSA-2R equipment group shall include one prime service chain and a redundant service chain which can be operated in hot-standby mode. Each SSAR service chain shall be capable of performing the following functions:

a. SSAR Service Support.

   1. Receive the SGL SSAR signal from the RF Power Divider and amplify.
   2. Perform group delay and amplitude equalization (as and where necessary) to compensate for channel amplitude and phase distortions introduced by the customer spacecraft, the assigned TDRS spacecraft, and the SGLT equipment.
   3. Frequency downconvert to IF.
   4. Provide Doppler correction as necessary.
   5. Perform SSAR signal processing:

      (a) Despread the received PN spread signal (when applicable).

      (b) Provide PN code epoch and clock for range measurement and time transfer (when applicable).

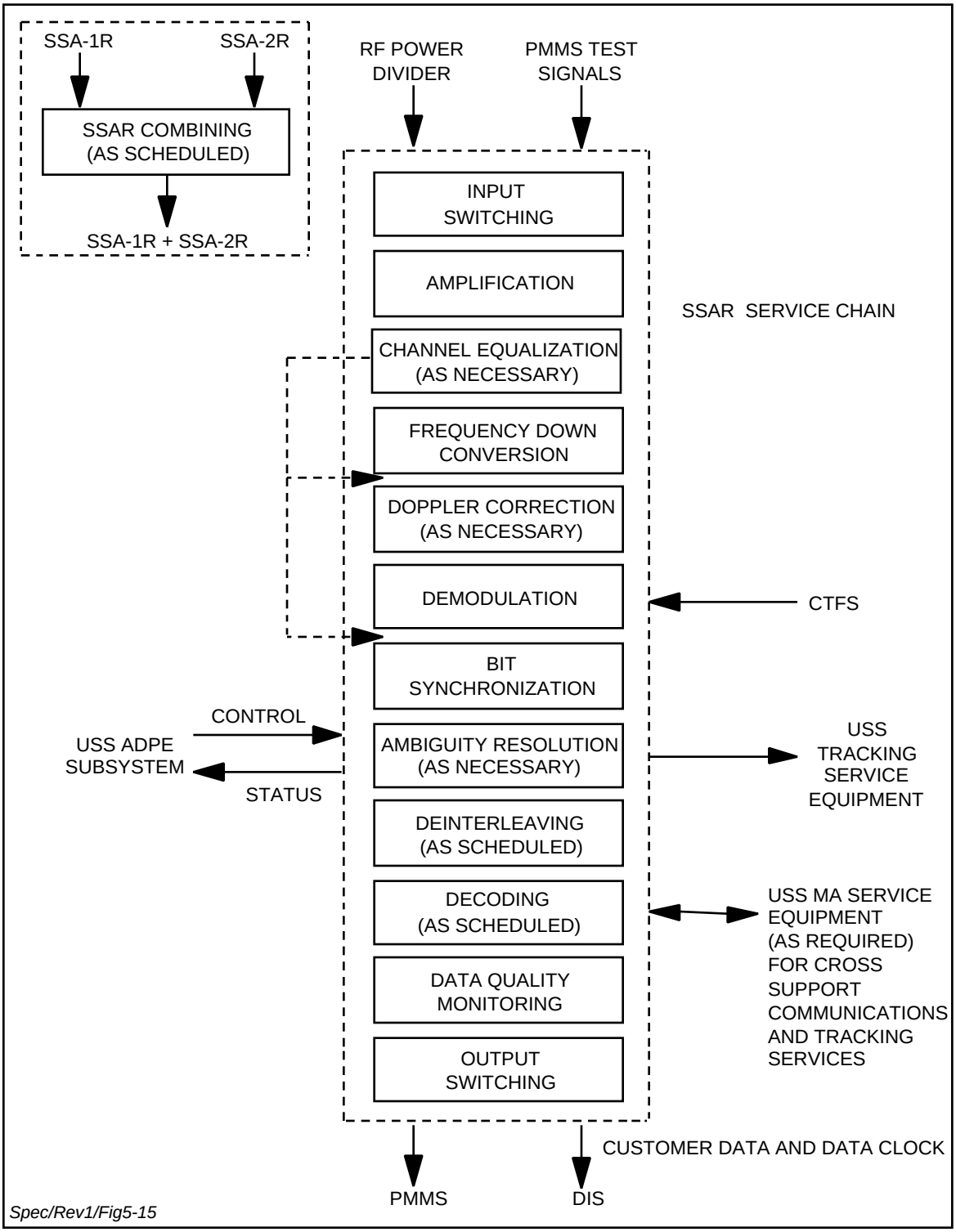

Figure 5-15. USS SSAR Functional Diagram

(c) Demodulate the carrier.

(d) Provide recovered carrier for Doppler measurement (when applicable).

(e) Recover symbol clock and detect the symbol.

(f) Support return data delay measurement (Danzante and Cacique only).

(g) Support ground terminal delay measurement for Range Zero Set.

6. In conjunction with the USS ADPE Subsystem, as necessary, resolve data channel and phase ambiguity (when applicable).

7. When scheduled, combine the SSA-1R and SSA-2R signal outputs (SSAR combining); for quadriphase modulation, SSAR combining applies to each of the I and Q Channels independently.

8. Deinterleave the interleaved symbol stream (when applicable); perform convolutional decoding on each baseband symbol stream.

9. Provide a synchronous clock output with the data, except as in Item 11. below.

10. Clamp the data output (I and Q Channel independently for dual data channel operation) to a logical-1 when there is detected loss of data in the channel.

11. During times when a data channel is clamped to a logical 1 due to a loss of data, provide a data clock output signal whose rate is within five percent of the scheduled rate.

12. Provide service performance and equipment status data to the USS ADPE Subsystem and provide status indicators on the equipment front panels.

13. Provide the following signal interface ports:

    (a) Baseband/IF/RF signal interface ports to support MTG functions.

    (b) An interface port to provide the capability to access the SSAR service signal prior to demodulation.

14. Continuously monitor the service chain baseband output data for frame sync (during a scheduled service) and report the sync status to the USS ADPE Subsystem. The requirements for data quality monitoring are described in Appendix B.

15. Provide the switching capability to support the switching requirements of Figure 5-12.

    (a) Selection of RF inputs (RF Power Divider or PMMS test) into the designated prime and redundant SSAR service chains.

    (b) Selection of destination (DIS or PMMS) of the baseband data output from the designated prime and redundant SSAR service chains.

16. Provide the capability to bypass the decoding process.

b. SSHR Service Support. To support SSHR service, the SSAR service chain shall be capable of performing the following additional functions:

1. Perform Shuttle rate 1/3 convolutional decoding of the return data stream.

2. Receive a carrier only signal (no modulation) and provide a recovered carrier signal for one- and two-way Doppler measurements.

5.3.2.2.3 KSAR Equipment

Figure 5-16 is a functional diagram of a KSAR service chain. Each KSA-1R and KSA-2R equipment group shall include one prime service chain and one redundant service chain which can be operated in hot-standby mode. Each KSAR service chain shall be capable of performing the following functions:

a. KSAR Service Support.

1. Receive the SGL KSA-2R signal from the RF Power Divider and amplify (KSA-2R service chain); receive the SGL KSA-1R signal from the Antenna Subsystem and amplify (KSA-1R service chain).

2. Perform group delay and amplitude equalization (as and where necessary) to compensate for channel amplitude and phase distortions introduced by the customer spacecraft, the assigned TDRS spacecraft, and the SGLT equipment.

3. Frequency downconvert to IF.

4. Provide Doppler correction as necessary.

5. Perform KSAR signal processing:

(a) Despread the received PN spread signal (when applicable).

(b) Provide PN code epoch and clock for range measurement and time transfer (when applicable).

(c) Demodulate the carrier.

(d) Provide recovered carrier for Doppler measurement (when applicable).

(e) Recover symbol clock and detect the symbol.

(f) Support return data delay measurement (Danzante and Cacique only).

(g) Support ground terminal delay measurement for Range Zero Set.

6. In conjunction with the USS ADPE Subsystem, as necessary, resolve data channel and phase ambiguity (when applicable).

7. Perform convolutional decoding on the baseband data stream (when applicable).

8. Provide a synchronous clock output with the data, except as in Item 10 below.

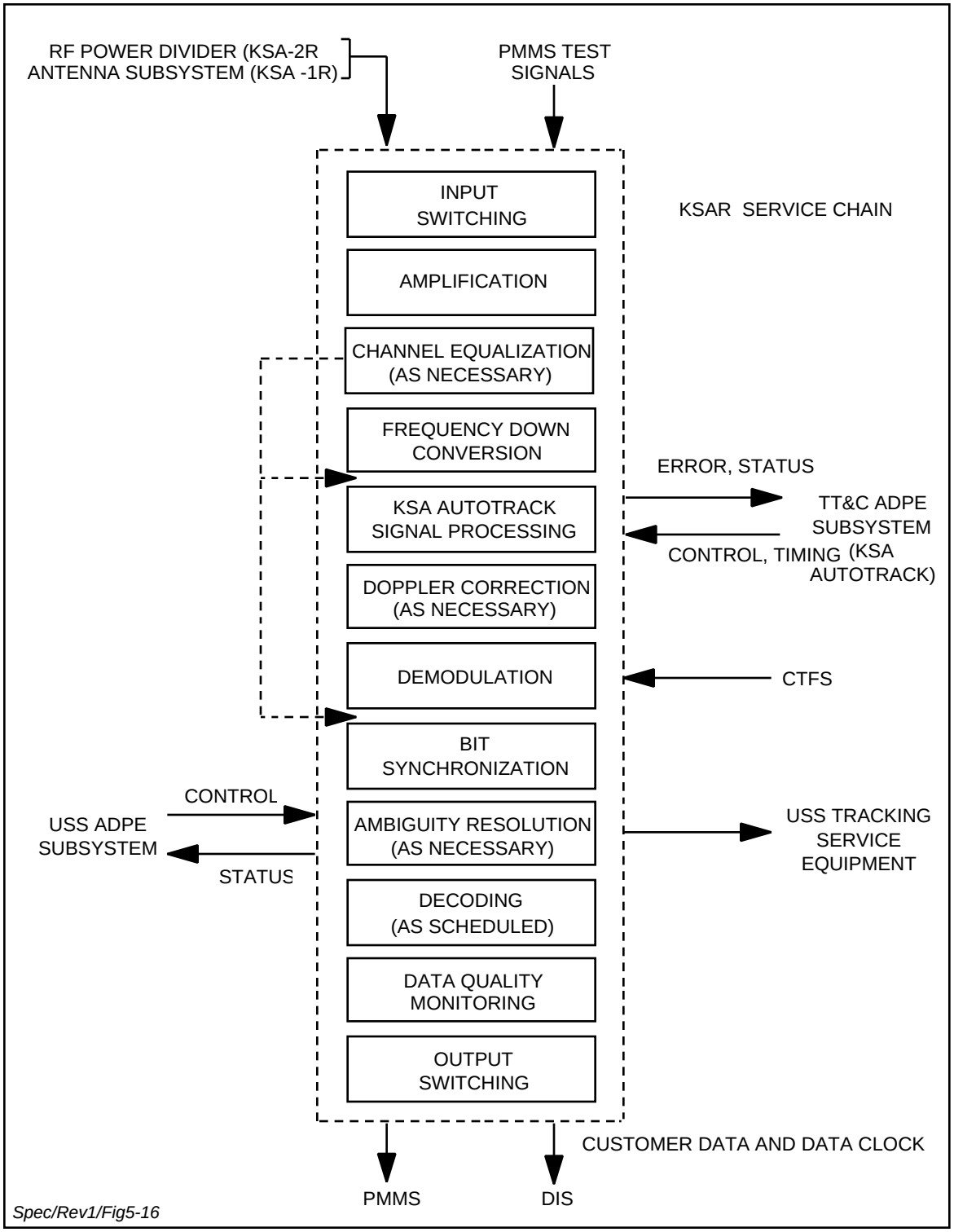

Figure 5-16. USS KSAR Functional Diagram

9. Clamp the data output (I and Q Channel independently for dual data channel operation) to a logical-1 when there is detected loss of data in the channel.

10. During times when a data channel is clamped to a logical 1 due to a loss of data, provide a data clock output signal whose rate is within five percent of the scheduled rate.

11. Provide service performance and equipment status data to the USS ADPE Subsystem and provide status indicators on the equipment front panels.

12. Provide the following signal interface ports:

    (a) Baseband/IF/RF signal interface ports to support MTG functions.

    (b) An interface port to provide the capability to access the KSAR service signal prior to demodulation.

13. Continuously monitor the service chain baseband output data for frame sync (during a scheduled service) and report the sync status to the USS ADPE Subsystem. The requirements for data quality monitoring are described in Appendix B.

14. Provide the switching capability to support the switching requirements of Figure 5-13:

    (a) Selection of RF inputs (RF Power Divider, RF Antenna Subsystem or PMMS test) into the designated prime and redundant KSAR service chains.

    (b) Selection of destination (DIS or PMMS) of baseband data output from the designated prime and redundant KSAR service chains.

15. Provide the capability to detect and process the TDRS SA antenna-pointing error signals that modulate the KSAR downlink signal:

    (a) Signal presence or absence detection.

    (b) Detection of the error signal.

    (c) Synchronization of the error signal processor in accordance with coding and time multiplexing applied to the error signal by the TDRS.

    (d) Provision of error signals and signal presence indication to the TTCS ADPE Subsystem.

b. KSHR Service Support. To support KSHR service, the KSAR service chain shall be capable of performing the following additional functions:

1. Process a KSHR signal with QDSB (Quadrature Double Side Band) modulation to provide three digital data channels.

2. Process a KSHR FM signal to provide a TV/analog channel and two digital data channels.

5.3.2.2.4 MAR Equipment

Figure 5-17 is a functional diagram of the MAR service equipment. The MAR service equipment at each Danzante and Cacique shall include a prime and redundant element separator and five MAR Signal Processors. The MAR service equipment at GRGT shall include an element separator and two MAR Signal Processors. Each MAR Signal Processor, in conjunction with the Element Separator and the Channel Separator shall be capable of performing the following functions:

a. Element Separation and Switching.

   1. Receive the frequency multiplexed MAR antenna element signals from the USS RF Power Divider.

   2. Demultiplex and compensate the TDRS doppler frequency offsets of the thirty antenna element signals (S_i; i = 1, ..., 30).

   3. For each element channel, S_i, select either prime or redundant channel to be provided to the associated power divider.

b. Channel Separation.

   1. Power dividing each element signal (S_i).2. Providing one power-divided signal from each element signal to each MAR Signal Processor, so that each MAR Signal Processor receives a unique power-divided signal.

c. MAR Signal Processing.

   1. Accept 30 separated element channels for processing.

   2. Have the capability to switch out any of the elements channels by request either from the TOCC or from the Local MMI.

   3. Perform MAR Beamforming:

      (a) Accept USS ADPE generated beampointing vectors.

      (b) Generate weights and combine element channels to form an MAR link.

      (c) Automatically null interfering signals by optimizing the customer signal to interferer plus noise ratio.

   4. Provide Doppler correction as necessary.

   5. Perform MAR signal processing:

      (a) Despread the received PN spread signal (when applicable).

      (b) Provide PN code epoch and clock for range measurement and time transfer (when applicable).

      (c) Demodulate the carrier.

      (d) Provide recovered carrier for Doppler measurement (when applicable).

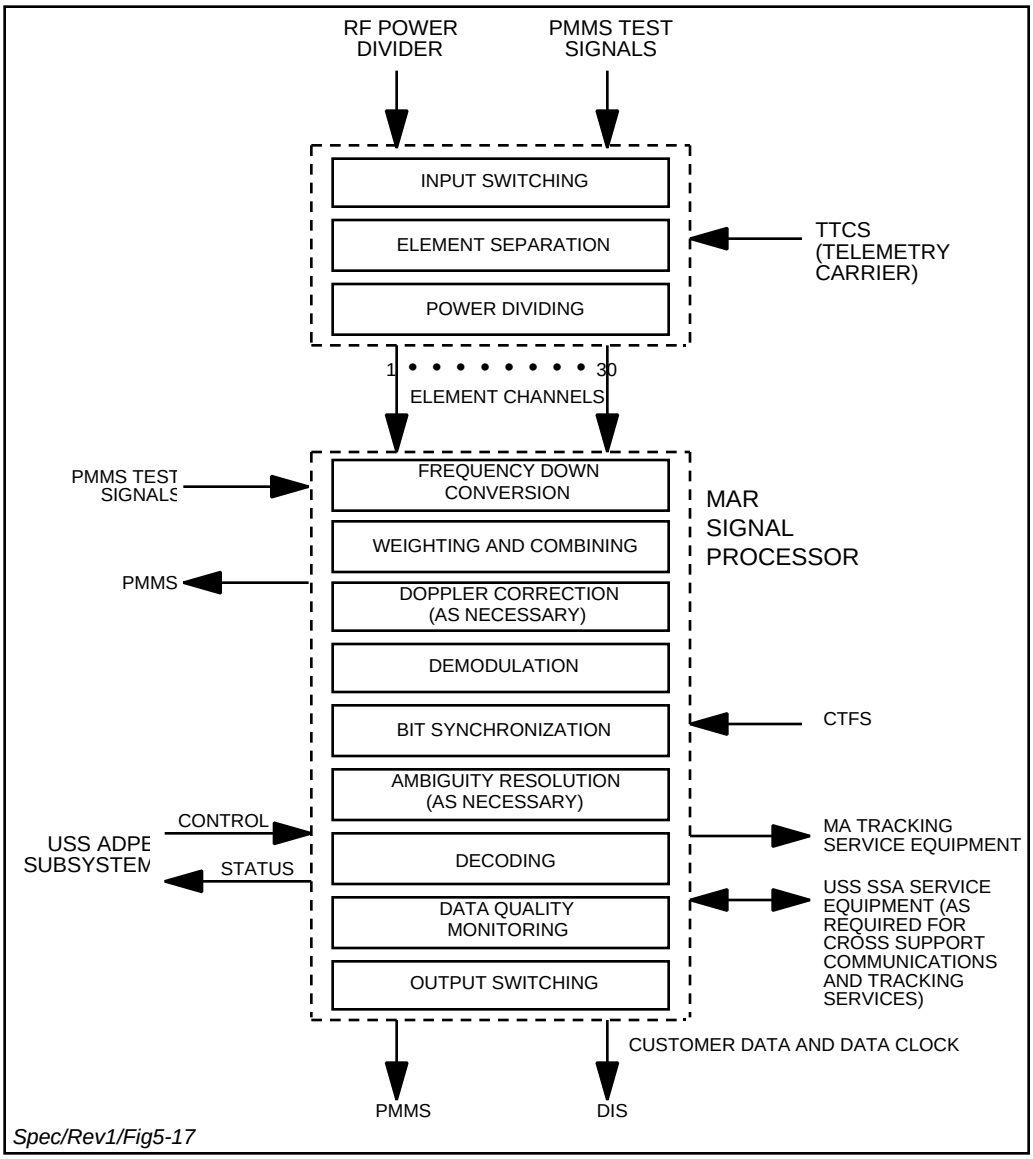

Figure 5-17. USS MAR Functional Diagram

(e) Recover symbol clock and detect the symbol.

(f) Support return data delay measurement (Danzante and Cacique only).

(g) Support ground terminal delay measurement for Range Zero Set.

6. In conjunction with the USS ADPE Subsystem, as necessary, resolve data phase ambiguity (when applicable).

7. Perform convolutional decoding on each baseband symbol stream.

8. Provide a synchronous clock output with the data, except as in Item 10 below.

9. Clamp the data output (I and Q channel independently for dual data channel operation) to a logical-1 when there is detected loss of data in the channel.

10. During times when a data channel is clamped to a logical-1 due to a loss of data, provide a data clock output signal whose rate is within five percent of the scheduled rate.

11. Provide service performance and equipment status data to the USS ADPE Subsystem and provide status indicators on the equipment front panels.

12. Provide the following signal interface ports:

    (a) Baseband/IF/RF signal interface ports to support MTG functions.

13. Continuously monitor the service chain baseband output data for frame sync (during a scheduled service) and report the sync status to the USS ADPE Subsystem. The requirements for data quality monitoring are described in Appendix B.

14. Provide the switching capability to support the switching requirements of Figure 5-14.

    (a) Selection of RF inputs (RF Power Divider or PMMS test) into the MAR service equipment.

    (b) Selection of destination (DIS or PMMS) of the baseband data output from the MAR Signal Processors.

5.3.2.3 Performance Requirements

The performance requirements for SAR equipment are divided as follows:

a. SSAR Equipment.

b. KSAR Equipment.

c. MAR Equipment.

5.3.2.3.1 SSAR Equipment

The performance of the SSAR equipment shall be as specified below.

5.3.2.3.1.1 Signal Parameters

The SSAR service equipment shall be capable of supporting a return link signal with the parameters as specified in Table 5-29 (SSAR) and Table 5-30 (SSHR).

Table 5-29. SSAR Service Signal Parameters

A. DATA GROUP 1 (DG1)[1]	
1. CUSTOMER CARRIER FREQUENCY (F_1)[2] MODES 1 AND 3 MODE 2[8]	$\frac{240}{221} \times F_R$ CUSTOMER SPACECRAFT OSCILLATOR
2. PN CODE MODULATION MODES 1 AND 2 MODE 3, I CHANNEL	 SQPN PSK, ± π/2 RADIANS
3. PN CHIP RATE (CHIPS/SEC)	$\frac{31}{240 \times 96} \times F_1$ (≈ 3M CHIPS/SEC)
4. PN CODE LENGTH (CHIPS) MODES 1 AND 3 MODE 2	 $(2^{10} - 1) \times 256$ $2^{11} - 1$
5. PN CODE EPOCH REFERENCE MODE 1 I CHANNEL Q CHANNEL[3] MODE 2 I CHANNEL Q CHANNEL MODE 3, I CHANNEL	 EPOCH (ALL 1'S CONDITION) SYNCHRONIZED TO EPOCH (ALL 1'S CONDITION) OF CUSTOMER SPACECRAFT RECEIVED FORWARD SERVICE RANGE CHANNEL PN CODE EPOCH DELAYED X + 1/2 PN CHIPS RELATIVE TO I CHANNEL PN CODE EPOCH CUSTOMER SPACECRAFT OSCILLATOR EPOCH DELAYED 1/2 PN CODE CHIP PERIOD RELATIVE TO I CHANNEL PN CODE EPOCH SAME AS MODE 1 (I CHANNEL)
6. PN CODE FAMILY MODES 1 AND 3 MODE 2	 TRUNCATED 18 STAGE SHIFT REGISTER SEQUENCES; PER STDN 108 GOLD CODES; PER STDN 108
7. SYMBOL INTERLEAVING[4]	530-SNUG (APPENDIX F)
8. SYMBOL FORMAT[7]	NRZ, Bi φ-L
9. DATA FORMAT	NRZ-L, NRZ-M, NRZ-S
10. DATA MODULATION MODES 1 AND 2 MODE 3 I CHANNEL Q CHANNEL	 MODULO-2 ADDED ASYNCHRONOUSLY TO PN CODE ON EACH CHANNEL; SQPN MODULO-2 ADDED ASYNCHRONOUSLY TO PN CODE PSK ± π/2 RADIANS

Table 5-29. SSAR Service Signal Parameters (Continued)

11. MODE 1 DATA RATE RESTRICTIONS[5] TOTAL I CHANNEL Q CHANNEL	 0.1-300 kbps 0.1-150 kbps 0.1-150 kbps
12. MODE 2 DATA RATE RESTRICTIONS[5] TOTAL I CHANNEL Q CHANNEL	 1-300 kbps 1-150 kbps 1-150 kbps
13. MODE 3 DATA RATE RESTRICTIONS[5] TOTAL I CHANNEL Q CHANNEL	 I (MAX) + Q (MAX) 0.1-150 kbps 1 kbps - 3 Mbps
B. <u>DATA GROUP 2</u>[1]	
1. CUSTOMER CARRIER FREQUENCY (F_2) COHERENT MODE (MODE 1)	$\frac{240}{221} \times F_R$
NONCOHERENT MODE (MODE 2)[8]	CUSTOMER SPACECRAFT OSCILLATOR
2. SYMBOL FORMAT[7]	NRZ, Biφ−L
3. DATA FORMAT	NRZ-L, NRZ-M, NRZ-S
4. DATA RATE RESTRICTIONS[5,6] TOTAL I CHANNEL Q CHANNEL	 I (MAX) + Q(MAX) 1 kbps - 3 Mbps 1 kbps - 3 Mbps
5. DATA MODULATION	SQPSK, BPSK (SINGLE DATA CHANNEL), OR QPSK (DUAL DATA CHANNEL)
6. SYMBOL INTERLEAVING[4]	530-SNUG (APPENDIX F)

NOTES

[1]THE CUSTOMER SPACECRAFT DATA CONFIGURATIONS ARE DEFINED IN SECTION 5.3.2.3.1.3.

[2]F_R IS THE CARRIER FREQUENCY ARRIVING AT THE CUSTOMER SPACECRAFT; EXCEPT DURING SCHEDULED PERIODS OF DOPPLER COMPENSATION INHIBIT, $F_R = f_o \pm E$, WHERE f_o EQUALS THE NOMINAL CENTER FREQUENCY OF THE CUSTOMER SPACECRAFT RECEIVER AS DEFINED IN THE SCHEDULE AND $E = 70 \times \ddot{R}$ WHERE $\ddot{R} \leq 50$ m/sec^2.

[3]Q CHANNEL PN CODE IS IDENTICAL TO I CHANNEL PN CODE OFFSET x + 1/2 PN CHIPS, WHERE $x \geq 20{,}000$. VALUE OF x IS DETERMINED BY PN CODE ASSIGNMENTS FOR A PARTICULAR CUSTOMER SPACECRAFT (STDN 108).

[4]FOR DG1, SYMBOL INTERLEAVING SHALL BE APPLICABLE ONLY TO THE DG1 MODE 3 Q CHANNEL. SYMBOL INTERLEAVING SHALL BE APPLICABLE ONLY FOR SYMBOL RATES EXCEEDING 300 ksps.

Table 5-29. SSAR Service Signal Parameters (Continued)

NOTES (CONT'D)

[5]DATA SIGNALS ON I AND Q CHANNELS MAY BE INDEPENDENT AND ASYNCHRONOUS. IF THE I AND Q CHANNEL DATA SIGNALS ARE INDEPENDENT, THE SUM OF THE DATA RATES ON THE I AND Q CHANNEL SHALL NOT EXCEED THE TOTAL MAXIMUM DATA RATE. FOR DATA GROUP 2 DUAL CHANNEL WITH IDENTICAL SYMBOL RATES ON THE I AND Q CHANNELS, THE I AND Q CHANNELS WILL BE OFFSET RELATIVE TO ONE ANOTHER BY ONE HALF SYMBOL PERIOD. WHEN BI-PHASE FORMAT CONVERSION IS USED, THE MAXIMUM DATA RATES FOR THE I CHANNEL, THE Q CHANNEL, AND THE TOTAL ARE REDUCED BY A FACTOR OF 2. FOR DG2, THE MAXIMUM DATA RATES FOR THE I AND Q CHANNELS ARE REDUCED BY A FACTOR OF 1.5 WHEN DATA IS RATE 1/3 CONVOLUTIONALLY CODED, OR A FACTOR OF 3 WHEN BOTH RATE 1/3 CODING AND BI-φ FORMAT CONVERSION ARE USED. WHEN THE DECODING OPERATION IS BYPASSED, THE MAXIMUM DATA RATE FOR THE Q-CHANNEL AND FOR THE I-CHANNEL IS 300 kbps FOR DG1 AND 6 Mbps FOR DG2.

[6]FOR SQPSK OPERATION, WITH IDENTICAL SYMBOL RATES AND POWER LEVELS ON THE I AND Q CHANNELS, THE MINIMUM RECEIVED C/N_o, AT THE LNA OUTPUT, SHALL EXCEED 48 dB-Hz.

[7]WHEN SYMBOL INTERLEAVING IS NOT UTILIZED, THE TRANSMITTED SYMBOL FORMAT MAY BE NRZ-TO-BI φ-L CONVERTED, IN WHICH CASE THERE SHALL BE NO G_2 INVERSION.

[8]MODE 2A DENOTES MODE 2 WHEN THE CUSTOMER SPACECRAFT OSCILLATOR FREQUENCY UNCERTAINTY IS LESS THAN ± 700 Hz; MODE 2B DENOTES THE CASE WHEN THE UNCERTAINTY IS LESS THAN ± 3 kHz.

Table 5-30. SSHR Service Signal Parameters

A. DATA RATE	MODE 1 - 96 kbps MODE 2 - 192 kbps MODE 3 - CARRIER ONLY; THE RETURN FORWARD LINK CARRIER
B. CARRIER MODULATION	BPSK, ± π/2 RADIANS
C. DATA CODING	CONVOLUTIONAL; RATE 1/3; CONSTRAINT LENGTH 7 G_1: 1111001 G_2: 1011011 G_3: 1100101
D. DATA FORMAT	NRZ-L
E. SYMBOL FORMAT	Bi φ-L

5.3.2.3.1.2 Input Signal Characteristics

The signal characteristics of the received SSAR signal shall be as specified below:

a. Input Power Levels. The total received isotropic power (customer signal plus customer to TDRS AWGN) at the SGLT Ku-band antenna will be as follows for clear sky conditions where the clear sky noise temperature is defined as 100°K:

   1. Maximum -137.12 dBmi.
   2. Minimum -153.12 dBmi.
   3. Nominal -138.62 dBmi.

The input signal may contain pulsed RFI with pulse widths up to 5 μs and pulse amplitude up to 10 dB above the average received power. This input signal shall not cause damage or cumulative degradation to the SGLT equipment. The SGLT implementation shall not extend the effect of each pulse by more than 100 nsec and shall provide for the operation of all signal processing functions, from RF to baseband, in the presence of pulsed RFI. Note: The P_E performance requirements of Section 5.3.2.3.1.6 do not apply to this input signal condition. The P_E performance requirements of Section 5.3.2.3.1.6 apply at the nominal input power level and not over the full range defined above.

b. Nominal Center Frequency.

   1. SSA1 13677.5 MHz.
   2. SSA2 13697.5 MHz.

c. Bandwidth. The input signal bandwidth will be determined by the customer signal bandwidth and the TDRS channel bandwidth defined in Section 5.3.2.3.1.6.e.

d. Phase Noise.

   1. Customer Coherent turnaround
      1 Hz - 10 Hz ≤ 2.7° rms.
      10 Hz - 1 kHz < 4.0° rms.
      1 kHz - 6 MHz ≤ 2.0° rms.
   2. Noncoherent mode
      1 Hz - 10 Hz ≤ 2.7° rms.
      10 Hz - 100 Hz ≤ 2.7° rms.
      100 Hz - 1 kHz ≤ 2.7° rms.
      1 kHz - 6 MHz ≤ 2.0° rms.

e. Input Signal Dynamics. Frequency and PN Chip Rate signal dynamics will result from customer spacecraft dynamics listed in Table 5-31.

f. Relative I and Q Phase. For QPSK or SQPSK modulation, the I Channel carrier phase will lead the Q Channel carrier phase by 90°.

Table 5-31. Customer Spacecraft Dynamics

PARAMETER	FREE FLIGHT	POWERED FLIGHT	
		NON-SHUTTLE	SHUTTLE
$\dot{R}$	≤ 12 km/SEC	≤ 15 km/SEC	≤ 12 km/SEC
$\ddot{R}$	≤ 15 m/SEC^2	≤ 50 m/SEC^2	≤ 50 m/SEC^2
$\dddot{R}$	≤ 0.02 m/SEC^3	≤ 2 m/SEC^3	≤ 2 m/SEC^3
NOTE R IS THE CUSTOMER-TO-TDRS RANGE.			

g. I/Q Channel Power Ratio (I:Q).

1. DG1 1:1 to 1:4.

2. DG2 1:1 or 4:1.

h. Data Rate and I/Q Power Ratios. The data rate will be to within 0.1% of the scheduled data rate, and I/Q power ratio to within ± 0.4 dB of the scheduled power ratio.

i. Identical and Synchronous (time aligned) Data.

1. For DG1 with input signals with identical and synchronous data on both I and Q channels and for which the I/Q channel signal power ratio is 1, the total signal power shall be consistent with that required for a single channel.

2. For DG1 with input signals with identical and synchronous data on both I and Q channels and for which unequal signal power is provided, the strong channel signal power will be consistent with that required for a single channel.

j. Unbalanced QPSK. The following characteristics will apply to DG2 unbalanced QPSK signals (i.e., I/Q power ratio is 4:1):

1. The strong channel will have the higher baud rate.

2. When the data rate exceeds 70% of the maximum allowable data rate on the strong channel, the weak channel data rate will not exceed 40% of the maximum allowable data rate on that channel.

k. Symbol Transition Density. Within any sequence of 512 symbols, the number of transitions will be greater than or equal to 128 and the maximum number of consecutive symbols without a transition will be less than or equal to 64.

l. Symbol Jitter and Jitter Rate. The symbol jitter and jitter rate will each be less than or equal to 0.1%. The symbol jitter and jitter rate are the input signal peak clock frequency jitter and peak clock jitter rate (sinusoidal or 3r random) as a percent of the symbol clock rate.

5.3.2.3.1.3 Input Signal Data Configurations

The SSAR service equipment shall be capable of processing input signals for the following data configurations:

a. DG1 - Single Data Channel.

   1. Balanced QPSK; synchronous, identical, convolutionally coded data on each of the I and Q Channels.

   2. Unbalanced QPSK; synchronous, identical, convolutionally coded data on each of the I and Q Channels.

   3. BPSK; convolutionally coded data (no quadrature component due to customer transponder failure).

   4. Balanced QPSK (alternate I/Q data bits); rate 1/2 convolutionally coded data.

      (a) The signal will be divided into an I Channel and a Q Channel data signal, each data channel consisting of alternate bits of the data signal.

      (b) Both of the I Channel and Q Channel data signals will be independently differentially formatted and convolutionally coded.

      (c) The Q Channel encoder output symbol will be delayed by a half symbol period relative to the I Channel encoder output symbol.

b. DG2 - Single Data Channel.

   1. BPSK; rate 1/2 or 1/3 convolutionally coded data.

   2. (a) SQPSK (alternate I/Q encoded symbols); rate 1/2 convolutionally coded data where the I and Q Channels consist of the two concurrent output symbols of a rate 1/2 convolutional encoder; data rate ≤ 300 kbps; G_1 on I Channel and G_2 on Q Channel.

      (b) The Q Channel encoder output symbol will be delayed by a half symbol period relative to the I Channel encoder output symbol.

   3. SQPSK (alternate I/Q data bits); rate 1/2 or 1/3 convolutionally coded data.

      (a) The signal will be divided into an I Channel and a Q Channel data signal, each data channel consisting of alternate bits of the data signal.

      (b) Both of the I Channel and Q Channel data signals will be independently differentially formatted, convolutionally coded, and, if required, symbol interleaved.

      (c) The Q Channel encoder output symbol will be delayed by a half symbol period relative to the I Channel encoder output symbol.

c. DG1 and DG2 - Dual Data Channel.

   1. Two independent convolutionally coded (rate 1/2 and/or rate 1/3) data signals, one on the I Channel and one on the Q Channel.

d. SSHR - Single Data Channel. BPSK, rate 1/3 convolutionally coded data or no data (CW).

5.3.2.3.1.4 Deinterleaving/Decoding Requirements

The SSAR service equipment shall be capable of the following deinterleaving (530-SNUG, Appendix F) and decoding requirements:

a. DG1 Modes 1 and 2 for a single data channel; DG1 Modes 1, 2, and 3 for dual data channels; DG2 for a single data channel (BPSK or SQPSK modulation); and DG2 for dual data channels (QPSK modulation). Deinterleaving for symbol rates exceeding 300 ksps for DG1 Mode 3 Q-Channel and for DG2.

   1. Code 1: convolutional, nonsystematic, transparent.

   2. Rate: 1/2.

   3. Constraint Length: $K = 7$.

   4. Generator Functions: $G_1 = 1111001$
      $G_2 = 1011011$.

   5. Symbols generated from G_1 will precede symbols generated from G_2 relative to the data bit period.

   6. Symbols generated from G_2 will either be true or complemented as defined by the Scheduling Order Data Message (SHO).

b. DG2 for a single data channel (BPSK).

   1. Code 2: convolutional, nonsystematic, transparent.

   2. Rate: 1/2.

   3. Constraint Length: $K = 7$.

   4. Generator Functions: $G_1 = 1011011$
      $G_2 = 1111001$.

   5. Symbols generated from G_1 will precede symbols generated from G_2 relative to the data bit period.

   6. Symbols generated from G_1 will be complemented.

c. DG1 Mode 3 (Q Channel) of a dual channel configuration, DG2 for a single data channel (BPSK modulation and SQPSK modulation (alternate data bits)); and DG2 for a dual data channel configuration (quadriphase modulation). Deinterleaving for symbol rates exceeding 300 ksps for DG1 Mode 3 Q-Channel and for DG2.

1. Code 3: convolutional, nonsystematic, transparent.

2. Rate: 1/3.

3. Constraint Length: K = 7.

4. Generator Functions: G_1 = 1111001
   G_2 = 1011011
   G_3 = 1110101.

5. Symbol sequence from the convolutional coding will be symbols generated from G_1, G_2, and G_3 successively relative to the data bit period.

6. Alternate symbols generated from the convolutional coding will be complemented.

d. SSHR Single Data Channel (BPSK).

1. Code 4: convolutional, nonsystematic, nontransparent.

2. Rate: 1/3.

3. Constraint Length: K = 7.

4. Generator Functions: G_1 = 1111001
   G_2 = 1011011
   G_3 = 1100101.

5. Symbol sequence from the convolutional coding will be symbols generated from G_1, G_2, and G_3 successively relative to the data bit period.

5.3.2.3.1.5 Ambiguity Resolution

a. Data Phase Ambiguity. Data Phase Ambiguity is the uncertainty that the logical sense of the data may be either true or complemented. The data phase ambiguity shall be resolved for all SSAR configurations and modes except when the data format is NRZ-L. For SSHR service, the convolutional decoding shall resolve the data phase ambiguity.

b. Data Channel Ambiguity. Data Channel Ambiguity is the uncertainty that the I Channel or Q Channel may appear on the USS/DIS interface port designated for the I Channel data, and conversely, the Q or I Channel data may appear on the port designated for the Q Channel. The data channel ambiguity shall be resolved for all configurations and modes except for DG2 dual data channel operation with QPSK; data channel ambiguity shall be resolved for this case if at least one of the following conditions apply:

1. I/Q (power) is 4:1.

2. I Channel is rate 1/3 coded and Q Channel is rate 1/2 coded or the converse.

3. One channel symbol rate differs by more than 25% from the other channel symbol rate.

c. Data Delay Ambiguity Resolution. The SSAR signal processing algorithms shall not introduce (e.g., via the buffering, queuing, clocking, etc.) data delay ambiguities greater than a 25% of symbol duration.

5.3.2.3.1.6 Probability of Error (P_E)

The following probability of error (P_E) requirements shall apply:

a. For the range of error probabilities specified below, the following P_E performance shall be achieved:

$C/N_o = E_b/N_o + 10 \log R_b + L(P_E, R_b)$;

where:
- $10^{-7} \leq P_E \leq 10^{-4}$
- R_b is the bit rate of the data channel.
- $L(P_E, R_b)$ is the allowable implementation loss (Tables 5-32, 5-33 and 5-34).
- E_b/N_o is the theoretically required value for P_E in an additive white gaussian noise (AWGN) channel.

b. The specified performance shall be achieved for each data channel at the decoder output.

Table 5-32. SSAR Allowable Implementation Loss, $L(P_E, R_b)$-Rate 1/2 Coding

DATA CHANNEL BIT RATE R_b (kbps)	E_b/N_o = 4.2 dB $P_E = 10^{-5}$	E_b/N_o = 4.8 dB $P_E = 10^{-6}$	E_b/N_o = 5.4 dB $P_E = 10^{-7}$
.1	2.5	2.7	3.0
1	2.5	2.7	2.9
10	2.5	2.7	2.9
100	2.5	2.7	2.9
1000	2.5	2.7	2.9
3000	3.0	3.2	3.7
6000	3.2	3.4	3.9

NOTE

FOR DG1 MODES 1, 2 AND I CHANNEL OF MODE 3, AN ADDITIONAL IMPLEMENTATION LOSS NOT TO EXCEED 0.5 dB SHALL BE ALLOWED.

FOR NRZ-M AND NRZ-S DATA FORMATS, AN ADDITIONAL IMPLEMENTATION LOSS OF 0.1 dB SHALL BE ALLOWED.

Table 5-33. SSAR And SSHR Allowable Implementation Loss, $L(P_E, R_b)$-Rate 1/3 Coding

DATA CHANNEL BIT RATE R_b (kbps)	E_b/N_o = 3.9 dB $P_E = 10^{-5}$	E_b/N_o = 4.5 dB $P_E = 10^{-6}$	E_b/N_o = 5.1 dB $P_E = 10^{-7}$
.1	2.5	2.7	3.0
1	2.5	2.7	2.9
10	2.5	2.7	2.9
100	2.5	2.7	2.9
1000	2.5	2.7	2.9
2000	3.0	3.2	3.2
4000	3.2	3.4	3.9

NOTES

FOR DG1 MODES 1, 2 AND I CHANNEL OF MODE 3, AN ADDITIONAL IMPLEMENTATION LOSS NOT TO EXCEED 0.5 dB SHALL BE ALLOWED.

FOR NRZ-M AND NRZ-S DATA FORMATS, AN ADDITIONAL IMPLEMENTATION LOSS OF 0.1 dB SHALL BE ALLOWED.

Table 5-34. SSHR Allowable Implementation Loss, $L(P_E, R_b)$

DATA CHANNEL BIT RATE R_b (kbps)	E_b/N_o = 3.2 dB $P_E = 10^{-4}$
96	2.1
192	2.1

c. The total C/No is reference at the SGLT antenna input and is defined as follows:

1. QPSK; Dual Data Channel. C/N_o is the sum of the I and Q Channel C/N_o's where the individual channel C/N_o's are each in accordance with the formulation in Item a for that single channel data rate.

2. DG1; Balanced QPSK; Single Data Channel. The total C/N_o is in accordance with the formulation in Item a where the data rate is the single data channel data rate; a maximum 0.1 db additional implementation loss relative to Tables 5-32 and 5-33 shall be allowed.

3. DG1, Unbalanced QPSK; Single Data Channel. The total C/N_o is the sum of the I and Q Channel C/N_o's where only the strong channel C/N_o is in accordance with the formulation in Item a.

4. DG2; SQPSK; Single Data Channel (Alternate I/Q Encoded Symbols). The total C/N_o is in accordance with the formulation in Item a.

5. DG2; SQPSK; Single Data Channel (Alternate I/Q Data Bits). The I and Q Channels shall be separately processed (deinterleaved, if required, followed by convolutional and differential decoding); the total C/N_o is the sum of the I and Q Channel C/N_o's where the individual channel C/N_o's are each in accordance with the formulation in Item a and are each associated with 1/2 the bit rate of the data source.

6. DG1; Balanced QPSK; Single Data Channel (Alternate I/Q Data Bits). The I and Q Channels shall be separately processed (convolutional and differential decoding); the total C/N_o is the sum of the I and Q Channel C/N_o's where the individual channel C/N_o's are each in accordance with the formulation in Item a and are each associated with 1/2 the bit rate of the data source.

d. The specified performance shall include all components in the Antenna Subsystem and in the SSAR service chain.

e. The specified performance shall be achieved under the conditions specified below:

1. After signal acquisition has been completed and signal tracking has been achieved.

2. In the presence of additive white gaussian noise and when the signals at the LNA input contain the signal characteristics of Section 5.3.2.3.1.2 and the following additional distortions:

(a) TDRS Induced Distortions.

(1) Gain Flatness	The amplitude deviation will not exceed the bounds of Figure 5-18.
(2) Phase Nonlinearity	The phase deviation will not exceed the bounds of Figure 5-19.
(3) 3 dB Bandwidth	17.0 MHz

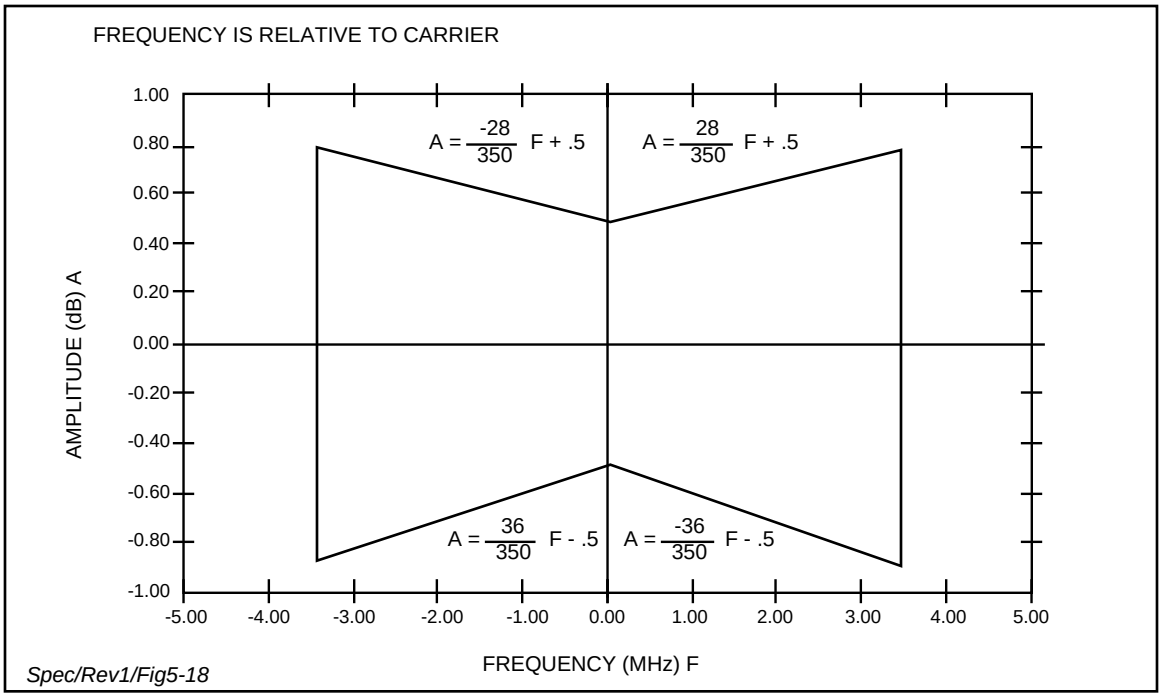

Figure 5-18. TDRS Induced SSAR Amplitude Distortion Region

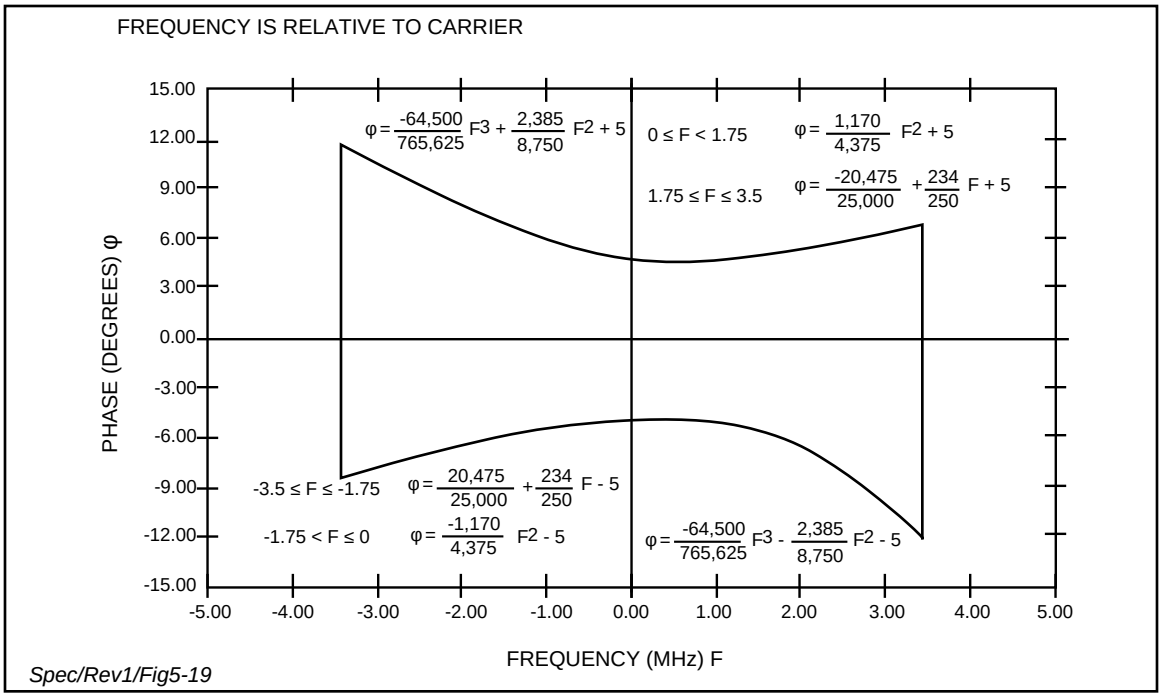

Figure 5-19. TDRS Induced SSAR Phase Distortion Region

(b) Customer Spacecraft Induced Distortions.

(1) Gain Flatness	< 0.3 dB (peak) over ± 3.5 MHz
(2) Phase Nonlinearity	< 3° (peak) over ± 3.5 MHz
(3) Gain Slope	≤ 0.1 dB/MHz over ± 3.5 MHz
(4) 3 dB Bandwidth	DG1: ≥ 4.5 MHz or two times maximum baud rate, whichever is larger. DG2 and SSHR: ≥ Two times maximum baud rate.

3. For the customer spacecraft free flight dynamics and powered flight dynamics (including Shuttle) specified in Table 5-31.

4. For all SSAR signal parameters and data configurations specified in Sections 5.3.2.3.1.1 and 5.3.2.3.1.3, respectively.

f. The preceding Bit Error Rate (BER) performance requirements shall not apply when the decoding process is bypassed.

g. The performance of the demodulator(s) shall meet or exceed the Probability of Error (P_E) specified in Tables 5-32, 5-33, and 5-34 over the range of carrier to noise density ratios (C/N_o) specified, from the value required for a probability of error of 10^{-5} (10^{-4} for SSHR) to a value 12 dB greater.

5.3.2.3.1.7 Acquisition Performance

Signal acquisition is required for the customer spacecraft free flight dynamics specified in Table 5-31 and for Shuttle powered flight dynamics specified in Table 5-31. For signal acquisition, the SGLT will be provided with vectors describing the customer spacecraft free and powered flight dynamics in accordance with Appendix A. The vectors will have an epoch time uncertainty of ≤ ± 9 seconds.

a. PN Code and Carrier Acquisition. Acquisition time shall be measured from the instant at which sufficient C/N_o as defined by Table 5-35 is present at the receiver/demodulator input and shall include the time to acquire the PN code (if applicable) and carrier. The following acquisition performance requirements shall apply:

   1. The SSAR acquisition time shall not exceed the values specified in Table 5-35, for the C/N_o values identified in Table 5-35 or the C/N_o required for $P_E = 10^{-5}$, whichever is greater and the customer spacecraft dynamics specified in Table 5-31 for free flight.

   2. When the SSHR service is scheduled as coherent, but is operating non-coherently, SSHR acquisition times shall not exceed the values specified in Table 5-35 for the C/N_o values shown, and Shuttle frequency dynamics as specified in Table 5-36. When the SSHR service scheduled and Shuttle operating mode (either coherent or non-coherent) are the same, the SSHR acquisition times specified in Table 5-35 shall not be exceeded for the C/N_o values shown, and the Shuttle powered flight dynamics of Table 5-31.

   3. The specified C/N_o is referenced at the SGLT antenna input.

   4. The probability of acquisition (P_{acq}) for the times specified in Table 5-35 shall be ≥ 0.9.

   5. When PN code acquisition is required, the time to acquire includes time to search the PN code uncertainty.

   6. In the event that acquisition does not occur within the time specified, the PN code shall be searched until acquisition occurs, or until a reacquisition is requested, or until the end of scheduled service.

b. Symbol/Decoder Synchronization. Symbol/Decoder Synchronization time shall be measured from the time carrier acquisition is achieved to the time decoder synchronization is achieved. Decoder synchronization is achieved when the Viterbi decoder has selected and implemented the correct blocking of the input symbols (into groups of (G1, G2) symbol pairs for rate 1/2 codes, or (G1, G2, G3) symbol triplets for rate 1/3 codes). Requirements for bit error probability and symbol slipping take effect at the time decoder synchronization is achieved.

Table 5-35. Acquisition Performance for SSAR and SSHR (Pn Code and Carrier Acquisition)

SERVICE[2] AND MODE	C/N_o[1] (dB-Hz)	C[3] OR NC	ACQUISITION TIME (SECONDS)
SSA			
DG-1, M-1	36	C	1
M-2A	36	NC	1
M-2B	36	NC	3
M-3	36	C	1
DG-2, M-1	36	C	1
M-2A	36	NC	1
M-2B	36	NC	3
SSH			
MODE 1	55.1	C OR NC	1
MODE 2	58.1	C OR NC	1
MODE 3	38.2	C	1

NOTES

1 a.DG1

FOR THE 1:1 I/Q CHANNEL POWER RATIO MODE, THE SUM OF THE I AND Q CHANNEL C/N_o's WILL BE EQUAL TO THE SPECIFIED VALUE. FOR THE 1:4 I/Q CHANNEL POWER RATIO MODE, THE Q CHANNEL C/N_o WILL BE EQUAL TO THE SPECIFIED VALUE. WHEN ONE CHANNEL IS ABSENT SUCH THAT THE REMAINING CHANNEL IS A BPSK SIGNAL, THE C/N_o WILL BE EQUAL TO THE SPECIFIED VALUE.

b. DG2

FOR BPSK MODULATION, THE C/N_o WILL BE EQUAL TO THE SPECIFIED VALUE. FOR THE 1:1 I/Q CHANNEL POWER RATIO QUADRIPHASE MODULATION, THE SUM OF THE I AND Q CHANNEL C/N_o's WILL BE EQUAL TO THE SPECIFIED VALUE. FOR THE 4:1 I/Q CHANNEL POWER RATIO QUADRIPHASE MODULATION, THE I CHANNEL C/N_o WILL BE EQUAL TO THE SPECIFIED VALUE. FOR SQPSK MODULATION, WITH IDENTICAL SYMBOL RATES AND POWER LEVELS ON THE I AND Q CHANNELS, THE MINIMUM RECEIVED C/N_o AT THE LNA OUTPUT WILL BE 48 dB-Hz.

c. SIGNAL ACQUISITION IS REQUIRED FOR SSAR SERVICE DATA RATES $\geq$ 100 bps. THE MINIMUM BIT RATES FOR SSAR SERVICE ACQUISITION CORRESPONDING TO 36 dB-Hz FOR THE VARIOUS DATA GROUPS, MODES, AND CUSTOMER SIGNAL STRUCTURES (I.E., MODULATION, I/Q POWER RATIO, CODE RATE, DATA FORMAT) ARE CALCULATED USING THE C/N_o FORMULATION IN PARAGRAPH 5.3.2.3.1.6 AND THE E_b/N_os AND IMPLEMENTATION LOSSES, $L(P_E, R_b)$s, DEFINED IN TABLES 5-32 AND 5-33 FOR $P_E=10^{-5}$. IF THE CALCULATED MINIMUM DATA RATE IS LESS THAN THE MINIMUM DATA RATE FOR THE DATA GROUPS AND MODES SPECIFIED IN TABLE 5-29, THE MINIMUM DATA RATE OF TABLE 5-29 APPLIES.

Table 5-35. Acquisition Performance for SSAR and SSHR (Pn Code and Carrier Acquisition) (Continued)

NOTES (CONT'D)

2 a. SSAR
MODES 2A AND 2B FOR DG-1 AND DG-2 ARE DEFINED TO BE SUCH THAT THE RECEIVED CARRIER FREQUENCY UNCERTAINTIES DUE TO CUSTOMER SPACECRAFT TRANSMITTER UNCERTAINTIES WILL NOT EXCEED THE FOLLOWING VALUES:

MODE	
2A	± 700 Hz
2B	± 3 kHz

b. SSHR
FOR MODES 1 AND 2, THE RECEIVED CARRIER FREQUENCY UNCERTAINTY WILL BE ≤ 70 kHz. THIS INCLUDES THE SHUTTLE TRANSMITTER UNCERTAINTY AND THE SHUTTLE EPHEMERIS UNCERTAINTY.

3 C DENOTES: CUSTOMER COHERENT TURNAROUND.
NC DENOTES: CUSTOMER NONCOHERENT TURNAROUND.

Table 5-36. Acquisition Frequency Uncertainty for SSHR Services (Delta from Nominal at SGL Antenna Input)

SERVICE AS SCHEDULED IN SHO	UNCERTAINTY IN FREQUENCY (Hz)	UNCERTAINTY IN FREQ RATE OF CHANGE (Hz/SEC)
SSHR COHERENT (DOPPLER COMP ENABLED)	± 70000	± 150
SSHR COHERENT (DOPPLER COMP INHIBITED)	± 70000	± 276
SSHR NONCOHERENT	± 70000	± 150

For the purposes of decoder synchronization, the minimum data bit transition density is 64 randomly distributed data bit transitions within any sequence of 512 data bits with no more than 64 consecutive data bits without a transition. For the minimum symbol and data transition densities and the minimum specified C/No values required for 10-5 PE performance, the time to achieve symbol/decoder synchronization (in seconds) shall not exceed the following specified values:

1. Biphase symbol formats: 1100/(data rate in bps), with 99% probability.
2. NRZ symbol formats: 6500/(data rate in bps), with 99% probability.

c. Symbol/Decoder Synchronization (SSHR Services Only). Symbol/Decoder Synchronization time shall be measured from the time carrier acquisition is achieved to the time decoder synchronization is achieved. Decoder synchronization is achieved when the Viterbi decoder has selected and implemented the correct blocking of the input symbols (into groups of (G1, G2 G3) symbol triplets), and the correct polarity of the input symbols. Requirements for bit error probability and symbol slipping take effect at the time decoder synchronization is achieved.

For the purposes of decoder synchronization, the minimum data bit transition density is 64 randomly distributed data bit transitions within any sequence of 512 data bits with no more than 64 consecutive data bits without a transition. For the minimum symbol and data transition densities and the minimum specified C/N_o values required for 10^{-4} P_E performance, the time to achieve symbol/decoder synchronization (in seconds) shall not exceed the following specified values:

1. 1600/(data rate in bps), with 99% probability.

d. Symbol/Deinterleaver/Decoder Synchronization (Coded and Interleaved Data Only). Symbol/Deinterleaver/Decoder Synchronization time shall be measured from the time carrier acquisition is achieved to the time decoder synchronization is achieved. Decoder synchronization is achieved when the Viterbi decoder has selected and implemented the correct blocking of the input symbols (into groups of (G1, G2) symbol pairs for rate 1/2 codes, or (G1, G2, G3) symbol triplets for rate 1/3 codes). Requirements for bit error probability and symbol slipping take effect at the time decoder synchronization is achieved.

For the purposes of decoder synchronization, the minimum data bit transition density is 64 randomly distributed data bit transitions within any sequence of 512 data bits with no more than 64 consecutive data bits without a transition. For the minimum symbol and data transition densities and the minimum specified C/N_o values required for 10^{-5} P_E performance, the time to achieve symbol/deinterleaver/decoder synchronization (in seconds) shall not exceed the following specified values, with a probability of at least 0.99:

1. Rate 1/2 Coding.
   (a) 36,000/(data rate in bps), average time
   (b) 66,000/(data rate in bps), maximum time
2. Rate 1/3 Coding.
   (a) 26,000/(data rate in bps), average time
   (b) 46,000/(data rate in bps), maximum time

5.3.2.3.1.8 BIT Slippage

a. Normal Transition Density. The mean time between slips caused by a cycle slip in the symbol clock recovery loop shall be either no less than 90 minutes or no less than 10^{10} clock cycles, whichever is greater, for the C/N_o required for 10^{-5} P_E performance (10^{-4} for SSHR). This requirement applies for transition densities of at least 40% for NRZ symbols and any transition density for biphase symbols.

b. Low Transition Density. The mean time between slips caused by a cycle slip in the symbol clock recovery loop shall be either no less than 90 minutes or no less than 10^{10} clock cycles, whichever is greater, for 1.0 dB more C/N_o than required for 10^{-5} P_E performance (10^{-4} for SSHR). This requirement applies for NRZ symbol transition densities between 25% and 40%.

5.3.2.3.1.9 Mean Time-to-Cycle Slip

The mean time-to-cycle slip in tracking the carrier shall be greater than or equal to 90 minutes for 3 dB less C/N_o than required for 10^{-5} P_E performance (10^{-4} for SSHR), or 27.5 dB-Hz, whichever is greater. For SSHR Mode 3, the mean time between cycle slips in tracking the carrier shall be at least 90 minutes for an input C/N_o of 35.2 dB-Hz or greater.

5.3.2.3.1.10 False Acquisition

During signal acquisition and signal tracking, SSAR services shall be protected against false carrier acquisition and false acquisition to PN code sidebands, including multipath. Multipath is defined as specular reflections whose delay with respect to the direct signal lies within the range 700 nsec to 5 msec and whose received signal level is down at least 19 dB with respect to the direct signal.

5.3.2.3.1.11 Loss of Symbol Synchronization

For this requirement, maintenance of symbol synchronization is defined as a minimum mean time between symbol clock cycle slips of 10^6 clock cycles.

a. Normal Transition Density. Symbol synchronization shall be maintained for 3 dB less C/N_o than required for 10^{-5} P_E performance (10^{-4} for SSHR). This requirement applies for transition densities of a least 40% for NRZ symbols and any transition density for biphase symbols.

b. Low Transition Density. Symbol synchronization shall be maintained for 2 dB less C/N_o than required for 10^{-5} P_E performance (10^{-4} for SSHR). This requirement applies for NRZ symbol transition densities between 25% and 40%.

5.3.2.3.1.12 Signal Tracking and Reacquisition

a. Signal Tracking. For input C/N_o satisfying the following conditions -

   1. SSAR DG-1 Services. C/N_o is at least the value required for 10^{-5} P_E performance or 37.5 dB-Hz, whichever is greater;

   2. SSAR DG-2 and SSHR Modes 1 and 2 Services. C/N_o is at least the value required for 10^{-5} P_E performance (10^{-4} for SSHR) or 43.6 dB-Hz, whichever is greater; or

   3. SSHR Mode 3 Services. C/N_o is at least 38.2 dB-Hz;

   The following requirements apply: SSAR service equipment shall maintain signal tracking with a probability of more than 0.99 for the customer spacecraft powered flight dynamics specified in Table 5-31, and for an uncertainty in the ephemerides describing the customer spacecraft dynamics of $\leq \pm 9$ seconds. The ± 9 second ephemeris uncertainty shall be interpreted to mean that the customer position and velocity may be in error by $\leq \pm 9$ seconds and that for maneuver sequences, the true customer trajectory shall differ from the predicted trajectory by $\leq \pm 9$ seconds. The approximate decomposition of the $\pm$ 9 second ephemeris uncertainty is > 90%

along track, < 5% radial and < 10% cross track. The ephemeris uncertainty and the maneuver uncertainty are independent, i.e., the actual customer ignition time may differ from the epoch time of the ignition vector (Type 4) by ± 9 seconds and the position (and velocity) of the Type 4 vector may differ from the actual customer position (and velocity) by ± 9 seconds. SSAR service equipment shall maintain signal tracking with a probability of more than 0.99 through transitions from free to powered and powered to free flight dynamics for which $\dddot{R}$ exceeds 2 m/sec^3 for short periods, such as engine or thruster ignition and cutoff. For such transactions $\int_{t_1}^{t_2} \dddot{R}(t)dt$ shall be ≤ 50 m/sec^2 and $|t_2 - t_1|$ shall be << 1 second. The SGLT will be provided with vectors describing the customer spacecraft free and powered flight dynamics in accordance with Appendix A. These vectors will have an epoch time uncertainty of ≤ ± 9 seconds.

b. Reacquisition.

1. In case of loss of lock condition, the SSAR service equipment, in conjunction with the USS ADPE Subsystem as necessary, shall automatically initiate reacquisition using pre-drop-lock data to aid in the reacquisition.

2. SSAR service equipment shall reacquire the customer signal with a probability of more than 0.99 under the customer powered flight dynamics specified in Table 5-31 and for an uncertainty in the ephemerides describing the customer spacecraft dynamics of ≤ ± 9 seconds.

3. Reacquisition time shall be less than or equal to that for initial acquisition.

4. If reacquisition fails, the SGLT shall automatically revert to the initial acquisition process and provide notification to the NCC, the TOCC, and the Local MMI.

5. For SSHR Mode 1 and 2 services, the USS equipment shall automatically revert to the initial acquisition process upon detecting loss of link lock. The frequency uncertainty ranges and performance requirements shall be the same as specified for SSHR initial acquisition in paragraph 5.3.2.3.1.7.a.1.b.

5.3.2.3.1.13 SSAR Combining

SSAR post detection combining shall be provided such that the performance in Table 5-32 and 5-21b for $P_E = 10^{-5}$ and Table 5-34 for $P_E = 10^{-4}$ can be achieved with a 2.5 dB reduction in C/N_o on SSA-1R and SSA-2R. For quadriphase modulation, SSAR combining shall be performed for the I and Q Channels independently. Signal acquisition performance and range/Doppler measurement performance shall be determined by the SSAR combining implementation approach. The above requirements apply for symbol jitter and jitter rates of less than or equal to 0.01%.

5.3.2.3.1.14 C/N_o Variation

The USS SSAR equipment shall accommodate an input C/N_o variation of 12 dB, at a rate not to exceed 10 dB/sec, without requiring a reconfiguration.

5.3.2.3.1.15 Performance Measuring and Monitoring Support

a. Status Data Measuring and Monitoring. During service, the SSAR equipment shall provide equipment status and service performance status data to the USS ADPE Subsystem every second. This data shall include the following:

   1. Service Performance.

      (a) PN Code Lock.

      (b) Carrier Lock.

      (c) Symbol Lock.

      (d) Decoder or Deinterleaver/Decoder Lock.

      (e) C/N_o estimate.

      (f) E_b/N_o estimate.

   2. Equipment Status.

      (a) Power supply status.

      (b) AGC status.

   3. Data Quality Monitoring.

      (a) The DQM parameters are specified in Appendix B.

b. Front Panel Capabilities. To support the MTG requirements, all equipment, down to the LRU level, shall incorporate front panel control, status indicators, and test and monitoring points that include:

   1. Visual on/off status indication.

   2. Visual prime-redundant status indication.

   3. Access to input/output baseband, IF and RF signals and selected voltage levels.

   4. All status provided to the USS ADPE Subsystem.

   5. On/off controls.

   6. Test mode selects.

c. BIT/BITE Monitoring. Provide BIT/BITE monitoring data to the USS ADPE Subsystem.

5.3.2.3.1.16 Additional Signal Distortions

The SGLT input signal will contain additional signal distortions listed in Table 5-37. The SGLT implementation shall provide for operation of all signal processing functions from RF to baseband with an input signal containing these additional distortions.

Table 5-37. Additional Input Signal Distortions

SIGNAL CONSTRAINT	SSAR	SSHR
DATA ASYMMETRY	≤ ± 3%	≤ ± 3%
DATA TRANSITION TIME	≤ 5% OF BIT TIME BUT NO LESS THAN 17 NSEC	≤ 5% OF BIT TIME BUT NO LESS THAN 17 NSEC
I/Q DATA SKEW (RELATIVE TO REQUIREMENTS FOR I/Q DATA SYNCHRONIZATION)	≤ 3%	N/A
I/Q PN CHIP SKEW (RELATIVE TO 0.50 CHIP)	≤ 0.01 CHIP	N/A
PN CODE POWER SUPPRESSION	≤ 0.3 dB	N/A
MODE 2 PN CHIP RATE (RELATIVE TO ABSOLUTE COHERENCE WITH CARRIER RATE)	≤ 0.01 Hz PEAK AT PN RATE	N/A
BPSK PHASE IMBALANCE	≤ ± 3°	≤ ± 3°
GAIN IMBALANCE	≤ ±0.25 dB	≤ ±0.25 dB
QPSK PHASE IMBALANCE	90 ± 3°	N/A
AM/PM	≤ 12°/dB	≤ 12°/dB
SPURIOUS PM	≤ 3° RMS (100 Hz TO 6 MHz)	≤ 3° RMS (100 Hz TO 600 kHz)
INCIDENTAL AM (3σ) (AT FREQUENCIES > 10 Hz FOR DATA RATES < 1 kbps; AT FREQUENCIES > 100 Hz FOR DATA RATES ≥ 1 kbps)	≤ 6%	≤ 6%
NOTE SIGNAL CONSTRAINT DEFINITIONS ARE PROVIDED IN 530-SNUG, APPENDIX E.		

5.3.2.3.1.17 SSAR IF Interface Port

An SSAR IF interface port shall be provided to access the SSAR service signal prior to demodulation. Table 5-38 specifies the performance requirements of the IF interface port.

5.3.2.3.2 KSAR Equipment

The performance of the KSAR equipment shall be as specified below.

Table 5-38. SSA Return IF Port Requirements

A. CENTER FREQUENCY (WITH NO DOPPLER)	370 MHz
B. OUTPUT BANDWIDTH (MINIMUM)	12 MHz
C. OUTPUT IMPEDANCE	50 OHMS
D. VSWR	1.3:1 MAX, OVER 370 MHz ± 6 MHz
E. OUTPUT SIGNAL LEVEL	-15 dBM, ± 3 dB
F. SPURIOUS SIGNALS:	
SUM OF ALL SPURIOUS SIGNALS WITHIN OPERATING BANDWIDTH	≥ 30 dB BELOW DESIRED SIGNAL
INDIVIDUAL SPURIOUS SIGNALS	≥ 40 dB BELOW DESIRED SIGNAL

5.3.2.3.2.1 Signal Parameters

The KSAR service equipment shall be capable of supporting a return link signal with the parameters as specified in Table 5-39 (KSAR) and Table 5-40 (KSHR).

Table 5-39. KSAR Service Signal Parameters

A. DATA GROUP 1 (DG1)[1]	
1. CUSTOMER CARRIER FREQUENCY (F_1)[2] MODE 1 AND 3	$\frac{1600}{1469} \times F_R$
2. MODE 2[8]	CUSTOMER SPACECRAFT OSCILLATOR
3. PN CODE MODULATION	
MODES 1 AND 2	SQPN
MODE 3, I CHANNEL	PSK, ± π/2 RADIANS
4. PN CHIP RATE (CHIPS/SEC)	$\frac{31}{1600 \times 96} \times F_1$ (≈ 3M CHIPS/SEC)
PN CODE LENGTH (CHIPS)	
MODES 1 AND 3	$(2^{10} - 1) \times 256$
MODE 2	$2^{11} - 1$
5. PN CODE EPOCH REFERENCE	
MODE 1	EPOCH (ALL 1'S CONDITION)
I CHANNEL	SYNCHRONIZED TO EPOCH (ALL 1'S CONDITION) OF CUSTOMER SPACECRAFT RECEIVED FORWARD SERVICE RANGE CHANNEL PN CODE

Table 5-39. KSAR Service Signal Parameters (Continued)

Q CHANNEL[3]	EPOCH DELAYED X + 1/2 PN CHIPS RELATIVE TO I CHANNEL PN CODE EPOCH
MODE 2	CUSTOMER SPACECRAFT TRANSMITTER OSCILLATOR
I CHANNEL	
Q CHANNEL	EPOCH DELAYED 1/2 PN CODE CHIP PERIOD RELATIVE TO I CHANNEL PN CODE EPOCH
MODE 3	
I CHANNEL	SAME AS MODE 1 (I CHANNEL)
6. PN CODE FAMILY	
MODES 1 AND 3	TRUNCATED 18 STAGE SHIFT REGISTER SEQUENCES; PER STDN NO. 108
MODE 2	GOLD CODES; PER STDN NO. 108
7. DATA FORMAT	
WITHOUT CONVOLUTIONAL CODING	NRZ-L, NRZ-M, NRZ-S, Biφ-L, Biφ-M, Biφ-S
WITH CONVOLUTIONAL CODING[4]	NRZ-L, NRZ-M, NRZ-S
8. DATA MODULATION	
MODES 1 AND 2	MODULO-2 ADDED ASYNCHRONOUSLY TO PN CODE ON EACH CHANNEL; SQPN
MODE 3	
I CHANNEL	MODULO-2 ADDED ASYNCHRONOUSLY TO PN CODE
Q CHANNEL	PSK ± π/2 RADIANS
9. MODE 1 DATA RATE RESTRICTIONS[5]	
TOTAL	1-600 kbps
I CHANNEL	1-300 kbps
Q CHANNEL	1-300 kbps
10. MODE 2 DATA RATE RESTRICTIONS[5]	
TOTAL	1-600 kbps
I CHANNEL	1-300 kbps
Q CHANNEL	1-300 kbps
11. MODE 3 DATA RATE RESTRICTIONS[5]	
TOTAL	I(MAX) + Q(MAX)
I CHANNEL	1-300 kbps
Q CHANNEL	1 kbps - 150 Mbps

Table 5-39. KSAR Service Signal Parameters (Continued)

B. DATA GROUP 2[1]	
1. CUSTOMER CARRIER FREQUENCY (F_2)	
COHERENT MODE (MODE 1)	$\frac{1600}{1469} \times F_R$
NONCOHERENT MODE (MODE 2)[8]	CUSTOMER SPACECRAFT OSCILLATOR
2. DATA FORMAT	
WITHOUT CONVOLUTIONAL CODING[6]	NRZ-L, NRZ-M, NRZ-S, Biφ-L, Biφ-M, Biφ-S
WITH CONVOLUTIONAL CODING[4]	NRZ-L, NRZ-M, NRZ-S
3. DATA RATE RESTRICTIONS[5]	
TOTAL	1 kbps - 300 Mbps
I CHANNEL	1 kbps - 150 Mbps
Q CHANNEL	1 kbps - 150 Mbps
4. DATA MODULATION[7]	SQPSK, BPSK (SINGLE DATA CHANNEL), OR QPSK (DUAL DATA CHANNEL)

NOTES

[1]THE CUSTOMER SPACECRAFT DATA CONFIGURATION ARE DEFINED IN SECTION 5.3.2.3.2.3.

[2]F_R IS THE CARRIER FREQUENCY ARRIVING AT THE CUSTOMER SPACECRAFT; EXCEPT DURING SCHEDULED PERIODS OF DOPPLER COMPENSATION INHIBIT, $F_R = f_0 \pm E$, WHERE f_0 EQUALS THE NOMINAL CENTER FREQUENCY OF THE CUSTOMER SPACECRAFT RECEIVER AS DEFINED IN THE SCHEDULE AND $E = 500 \times \ddot{R}$ WHERE $\ddot{R} \leq 15 m/SEC^2$.

[3]Q CHANNEL PN CODE IS IDENTICAL TO I CHANNEL PN CODE OFFSET x + 1/2 PN CHIPS, WHERE $x \geq 20{,}000$. VALUE OF x IS DETERMINED BY PN CODE ASSIGNMENTS FOR A PARTICULAR CUSTOMER SPACECRAFT (STDN NO. 108).

[4]AT THE OPTION OF THE CUSTOMER, THE OUTPUT OF THE CONVOLUTIONAL ENCODER MAY BE NRZ TO Biφ-L CONVERTED. THIS FORMAT CONVERSION CAPABILITY WILL ONLY BE UTILIZED WITH DATA RATES ≤ 5 Mbps. NO G_2 SYMBOL INVERSIONS WITHIN THE CONVOLUTIONAL ENCODER WILL OCCUR WHEN THE OUTPUT OF THE CONVOLUTIONAL ENCODER IS CONVERTED TO Biφ-L FORMAT.

[5]DATA SIGNALS ON I AND Q CHANNELS MAY BE INDEPENDENT AND ASYNCHRONOUS. IF THE I AND Q CHANNEL DATA SIGNALS ARE INDEPENDENT, THE SUM OF THE DATA RATES ON THE I AND Q CHANNEL SHALL NOT EXCEED THE TOTAL MAXIMUM DATA RATE. FOR DATA GROUP 2 DUAL CHANNEL WITH IDENTICAL SYMBOL RATES ON THE I AND Q CHANNELS, THE I AND Q CHANNELS WILL BE OFFSET RELATIVE TO ONE ANOTHER BY ONE-HALF DATA BIT PERIOD OR, IF CONVOLUTIONALLY CODED, ONE-HALF ENCODED DATA SYMBOL PERIOD. FOR DG1 AND DG2, MAXIMUM DATA RATES FOR THE I CHANNEL, THE Q CHANNEL, AND THE TOTAL ARE REDUCED BY A FACTOR OF 2 WHEN DATA IS EITHER Bi-φ FORMATTED OR RATE ONE-HALF CONVOLUTIONALLY CODED. WHEN RATE ONE-HALF CONVOLUTIONAL CODING AND Bi-φ FORMAT CONVERSION ARE USED, THE MAXIMUM DATA RATES FOR THE I CHANNEL, THE Q CHANNEL, AND THE TOTAL ARE REDUCED BY A FACTOR OF 4 FOR DG1 AND DG2. Bi-φ DATA FORMAT WILL NOT BE USED FOR DATA RATES EXCEEDING 5 Mbps.

Table 5-39. KSAR Service Signal Parameters (Continued)

NOTES (Continued)

[6]FOR AN UNCODED SINGLE DATA CHANNEL WITH SQPSK MODULATION, ONLY NRZ-L AND Biφ-L SHALL BE USED. THE I AND Q CHANNEL DATA SIGNALS SHALL BE INDEPENDENTLY DIFFERENTIALLY FORMATTED PRIOR TO MODULATION

[7]BPSK MAY BE USED FOR A SINGLE DATA CHANNEL WITH DATA RATES UP TO 100 Mb/SEC (50 Mb/SEC IF RATE 1/2 CONVOLUTIONALLY ENCODED).

[8]MODE 2A DENOTES MODE 2 WHEN THE CUSTOMER SPACECRAFT OSCILLATOR FREQUENCY UNCERTAINTY IS LESS THAN ± 5 kHz; MODE 2B DENOTES THE CASE WHEN THE UNCERTAINTY IS LESS THAN + 20 kHz.

Table 5-40. KSHR Service Signal Parameters

A. MODE 1	DATA CHANNELS 1, 2, 3
1. CARRIER MODULATION	QDSB
2. I CHANNEL (CARRIER) POWER Q CHANNEL (CARRIER) POWER	6 dB
3. I-CHANNEL (CARRIER)	CHANNEL 3
(A) MODULATION	PSK ± π/2 RADIANS
(B) DATA FORMAT	NRZ-L, M, S
(C) DATA RATE	2 Mbps - 50 Mbps, OR NO DATA
(D) DATA CODING	CONVOLUTIONAL, NONSYSTEMATIC TRANSPARENT, RATE 1/2, CONSTRAINT LENGTH K=7, G_1 = 1111001, G2 = 1011011; SYMBOLS GENERATED FROM G2 WILL BE COMPLEMENTED. ENCODER CONSISTS OF 5 PARALLEL ENCODERS AS SPECIFIED IN SECTION 5.3.2.3.2.3.B.4.
4. Q-CHANNEL (CARRIER)	
(A) MODULATION	8.5 ± .0006 MHz SQUARE WAVE SUBCARRIER, QPSK MODULATED WITH CHANNEL 1 AND CHANNEL 2 DATA.
(B) I CHANNEL (SUBCARRIER) POWER Q-CHANNEL (SUBCARRIER) POWER	4.3 dB
(C) I-CHANNEL (SUBCARRIER)	CHANNEL 2
(1)DATA RATE	16 kbps - 2 Mbps OR NO DATA
(2)DATA FORMAT	NRZ-L,M,S ALL DATA RATES BIPHASE-L, M, S ≤ 1.024 Mbps

Table 5-40. KSHR Service Signal Parameters (Continued)

(D) Q-CHANNEL (SUBCARRIER)	CHANNEL 1
(1)DATA RATE	192 kbps
(2)DATA CODING	CONVOLUTIONAL; RATE 1/3; CONSTRAINT LENGTH 7 G1: 1111001 G2: 1011011 G3: 1100101
(3)DATA FORMAT	NRZ-L
(4)SYMBOL FORMAT	Biφ-L
B. MODE 2	ANALOG/VIDEO CHANNEL 3 DATA CHANNELS 1, 2
1. CARRIER MODULATION	FM
(A) SIGNAL FORMAT INTO FM MODULATOR	FREQUENCY DIVISION MULTIPLEXED ANALOG/VIDEO CHANNEL AND 8.5 MHz MODULATED SUBCARRIER
(B) CARRIER FM DEVIATION FREQUENCY	11 MHz PEAK
(C) SUBCARRIER FM DEVIATION FREQUENCY	6 MHz PEAK
(D) FM PREDETECTION 3 dB BANDWIDTH	50 MHz
2. ANALOG/VIDEO CHANNEL 3	
(A) DATA FORMAT	ANALOG
(B) DATA 3 dB BANDWIDTH	4.2 MHz
3. SUBCARRIER MODULATION	8.5 ± 0006 MHz SINUSOIDAL SUBCARRIER, QPSK MODULATED WITH CHANNEL 1 AND CHANNEL 2 DATA.
(A) I CHANNEL (SUBCARRIER) POWER Q-CHANNEL (SUBCARRIER) POWER	4.3 dB
(B) I-CHANNEL (SUBCARRIER)	CHANNEL 2
(1) DATA FORMAT	NRZ-L,M,S ALL DATA RATES BIPHASE-L, M, S ≤ 1.024 Mbps
(2) DATA RATE RESTRICTIONS	16 kbps - 2 Mbps OR NO DATA
(C) Q-CHANNEL (SUBCARRIER) [1]	CHANNEL 1
(1) DATA RATE	192 kbps
(2) DATA CODING	CONVOLUTIONAL; RATE 1/3; CONSTRAINT LENGTH 7 G1: 1111001 G2: 1011011 G3: 1100101
(3) DATA FORMAT	NRZ-L
(4) SYMBOL FORMAT	Biφ-L

Table 5-40. KSHR Service Signal Parameters (Continued)

NOTES

[1]EACH SERVICE CHAIN MUST BE CAPABLE OF PROCESSING KSHR MODE 1 AND 2 CHANNEL 1 WITH THE FOLLOWING ALTERNATE PARAMETERS:

(1) DATA RATE 192 kbps

(2) DATA CODING NONE

(3) DATA FORMAT Biφ-L

IT IS NOT REQUIRED THAT THIS CONFIGURATION BE ACHIEVABLE VIA ADPE CONTROL. THE NOMINAL ADPE CONFIGURATION WILL BE THE RATE-1/3 CODED CHANNEL FOUND IN THE BODY OF THIS TABLE.

5.3.2.3.2.2 Input Signal Characteristics

The signal characteristics of the received KSAR signal shall be as specified below:

a. Input Power Levels. The total received isotropic power (customer signal plus customer-to-TDRS AWGN) at the SGLT Ku-band antenna will be as follows for clear sky conditions, where the clear sky noise temperature is defined as 100°K:

1.	Minimum	KSA1	-141.63 dBmi.
		KSA2	-145.28 dBmi.
2.	Maximum	KSA1	-125.63 dBmi.
		KSA2	-129.38 dBmi.
3.	Nominal	KSA1	-127.63 dBmi.
		KSA2	-131.28 dBmi.

The input signal may contain pulsed RFI with pulse widths up to 1 µs and pulse amplitudes up to 10 dB above the average received power. This input signal shall not cause damage or cumulative degradation to the SGLT equipment. The SGLT implementation shall not extend the effect of each pulse by more than 100 ns and shall provide for the operation of all signal processing functions, from RF to baseband, in the presence of pulsed RFI. The KSAR autotrack performance is required in the presence of pulsed RFI. Note: The P_E performance requirements of Section 5.3.2.3.2.6 do not apply to this input signal condition. The performance requirements of Section 5.3.2.3.2.6 apply at the nominal input power levels and not over the full ranges defined above.

b. Nominal Center Frequency.

1. KSA1 13528.4 MHz.

2. KSA2 13928.4 MHz.

c. Bandwidth.

The input signal bandwidth will be determined by the customer signal bandwidth and the TDRS channel bandwidth defined in Section 5.3.2.3.2.6e.

d. Phase Noise.

1.	Customer Coherent turnaround	1 Hz - 10 Hz ≤ 4.9°rms. 10 Hz - 1 kHz ≤ 5.4°rms. 1 kHz - 150 MHz ≤ 2.1°rms.
2.	Customer Noncoherent mode	1 Hz - 10 Hz ≤ 15.4°rms. 10 Hz - 100 Hz ≤ 8.2°rms. 100 Hz - 1 kHz ≤ 2.7°rms. 1 kHz - 150 MHz ≤ 2.7°rms.
3.	KSHR Subcarrier	1 Hz - 10 Hz ≤ 15.7°rms. 10 Hz - 100 Hz ≤ 8.5°rms. 100 Hz - 1 kHz ≤ 3.0°rms. 1 kHz - 4 MHz ≤ 3.0°rms.

e. Input Signal Dynamics. Frequency and PN Chip Rate signal dynamics will result from customer spacecraft dynamics specified below:

1. $\dot{R} \leq 12$ km/sec.
2. $\ddot{R} \leq 15$ m/sec^2.
3. $\dddot{R} \leq 0.02$ m/sec^3.

f. Relative I and Q Phase. For QPSK or SQPSK modulation, the I Channel carrier phase will lead the Q Channel carrier phase by 90°.

g. I/Q Channel Power Ratio (I:Q).

1. DG1 1:1 to 1:4.
2. DG2 1:1 or 4:1.

h. Data Rate and I/Q Power Ratios. The data rate will be within 0.1% of the scheduled data rate, and I/Q power ratio to within ± 0.4 dB of the scheduled power ratio.

i. Identical and Synchronous (time aligned) Data.

1. For DG1 with input signals with identical and synchronous data on both I and Q Channels and for which the I/Q Channel signal power ratio is 1, the total signal power will be consistent with that required for a single channel.
2. For DG1 with input signals with identical and synchronous data on both I and Q channels and for which unequal signal power is provided, the strong channel signal power will be consistent with that required for a single channel.

j. Unbalanced QPSK. The following characteristics will apply to DG2 unbalanced QPSK signals:

1. The strong channel will have the higher baud rate.
2. When the data rate exceeds 70% of the maximum allowable data rate on the strong channel, the weak channel data rate will not exceed 40% of the maximum allowable data rate on that channel.

k. Symbol (Data) Transition Density. Within any sequence of 512 symbols (bits), the number of transitions will be greater than or equal to 128 and the maximum number of

consecutive symbols (bits) without a transition will be less than or equal to 64.

l. Symbol (Data) Jitter and Jitter Rate. The symbol (data) jitter and jitter rate are the input signal peak clock frequency jitter and peak clock jitter rate (sinusoidal or 3σ random) as a percent of the symbol (data) clock rate.

Sinusoidal Jitter and Random Jitter are defined as follows:

1. Definitions

   (a) Sinusoidal Jitter
   f_m = Jitter Rate
   Δf = Peak Frequency Deviation

   (b) Random Jitter
   f_m = Maximum Jitter Rate
   (i.e., spectral distribution is from zero to f_m)
   Δf = 3-sigma Frequency Deviation

   (c) Symbol Rate
   R_s = Symbol Rate

2. Constraints. The USS will be provided with scheduling parameters (refer to 530-ICD-NCC-FDF/WSC, Section 9.2.3.12) which categorize the input jitter for each channel into one of six ranges: None, 0.01%, 0.1%, 0.5%, 1.0%, and 2.0%. The constraints governing each of the six cases are detailed below.

   (a) Jitter = None (Coded or Uncoded Data)
   When the scheduled jitter parameter for a data channel is "None" and the data is either coded or uncoded, then $\Delta f = f_m = 0$.

   (b) Jitter = 0.01% (Coded or Uncoded Data)
   When the scheduled jitter parameter for a data channel is "0.01%" and the data is either coded or uncoded, Δf and f_m will lie as shown in Figure 5-20 for all symbol rates up to and including 150 Msps.

   (c) Jitter = 0.1% (Coded or Uncoded Data)
   When the scheduled jitter parameter for a data channel is "0.1%" and the data is uncoded, Δf and f_m will lie as shown in Figures 5-21, 5-22, 5-23, and 5-24 as appropriate, depending on symbol rate. When the data is coded, Δf and f_m will lie as shown in Figure 5-24, independent of symbol rate.

   (d) Jitter = 0.5% (KSHR Channel 2 Biφ-L Only)
   When the scheduled jitter parameter for KSHR Channel 2 is "0.5%", Δf and f_m are constrained as follows:

   $\Delta f \leq 0.005\ R_s$
   $f_m \leq 0.005\ R_s$

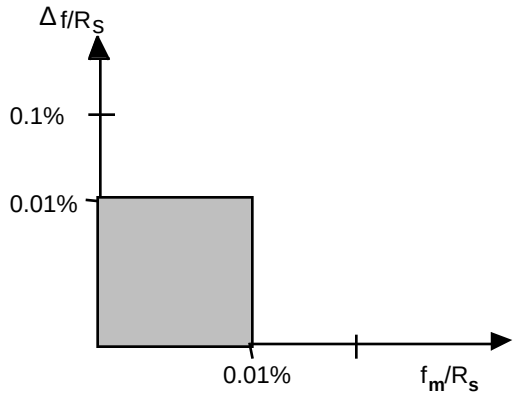

Figure 5-20. Coded and Uncoded Data at 0.01% Jitter

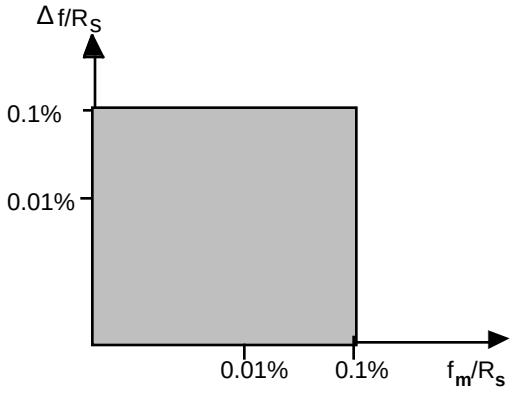

Figure 5-21. Uncoded Data at 0.1% Jitter for $R_s \leq 20$ Msps

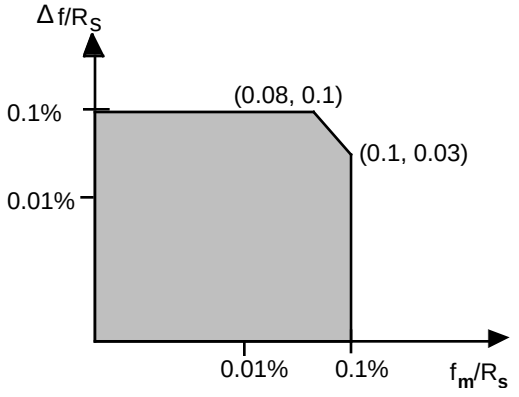

Figure 5-22. Uncoded Data at 0.1% Jitter for ($20 < R_s \leq 40$) Msps

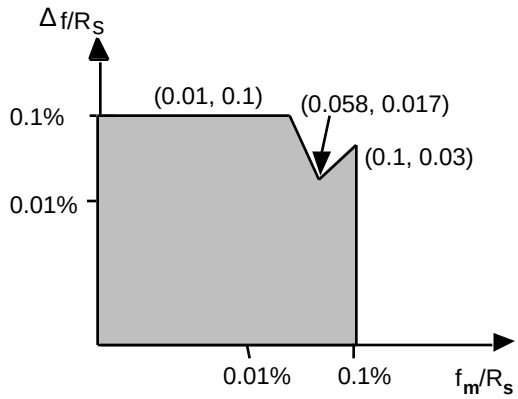

Figure 5-23. Uncoded Data at 0.1% Jitter for (40 < R_s ≤ 75) Msps

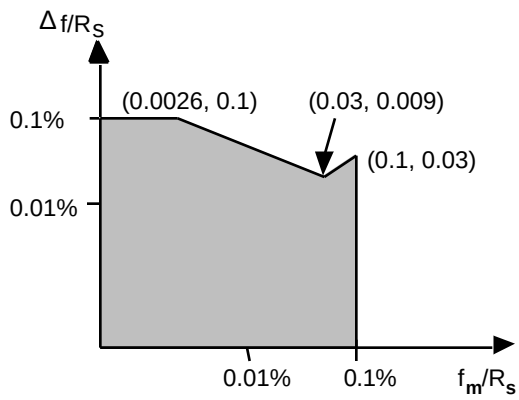

Figure 5-24. Uncoded Data at 0.1% Jitter for (75 < R_s ≤ 150) Msps Coded Data at 0.1% Jitter for (R_s ≤ 150) Msps

(e) Jitter = 1.0% (KSHR Channel 2 Biφ-L Only)
When the scheduled jitter parameter for KSHR Channel 2 is "1.0%", Δf and f_m are constrained as follows:

$\Delta f \leq 0.01\ R_s$
$f_m \leq 0.01\ R_s$

(f) Jitter = 2.0% (KSHR Channel 2 Biφ-L Only)
When the scheduled jitter parameter for KSHR Channel 2 is "2.0%", Δf and f_m are constrained as follows:

$\Delta f \leq 0.02\ R_s$
$f_m \leq 0.02\ R_s$

5.3.2.3.2.3 Input Signal Data Configurations

The KSAR service equipment shall be capable of processing input signals for the following data configurations:

a. DG1 - Single Data Channel.

   1. Balanced QPSK; synchronous, identical, convolutionally coded or uncoded data on each of the I and Q Channels.

   2. Unbalanced QPSK; synchronous, identical, convolutionally coded or uncoded data on each of the I and Q Channels.

   3. BPSK; coded and uncoded (no quadrature component due to customer transponder failure).

b. DG2 - Single Data Channel.

   1. BPSK; coded and uncoded.

   2. SQPSK; uncoded.

      (a) Uncoded data on the I and Q Channels, consisting of alternate bits or a single data signal.

      (b) The I and Q Channel data signals will be separately differentially formatted prior to modulating the quadrature carrier.

   3. SQPSK, coded ≤ 10 Mbps.

      (a) The single data channel will contain the two concurrent output symbols of a convolutional encoder on the I and Q Channels.

   4. SQPSK; coded > 10 Mbps.

      (a) The signal will be divided into an I Channel and a Q Channel data signal, each data channel consisting of alternate bits of the data signal.

      (b) Each of the I Channel and Q Channel data signals will be differentially formatted, then independently convolutionally coded, on the I and Q Channels.

      (c) Each convolutional encoder will be an n-parallel encoder consisting of n branch encoders in parallel.

      (d) The composite serial symbol output from the n-parallel encoder will consist of the branch encoder output symbols interleaved every nth symbol.

      (e) The relationship between the data rate and the number of branch encoders is as follows.

$n = R/(2 \times 10^7)$ Rounded to next higher integer if $n \neq$ integer

where n = number of branch encoders for the I Channel encoder and for the Q Channel encoder

R = channel data rate (bps).

c. DG1 and DG2 - Dual Data Channels.

1. QPSK; uncoded or coded.

(a) Two independent data signals, one on the I Channel and one on the Q Channel.

(b) Either data signal, or both, may be either uncoded or convolutionally coded.

(c) For a coded data signal, on the dual data channel, the data signal will be convolutionally encoded, using an n-parallel encoder prior to incorporating the encoded output symbols on either the I or Q Channels. The relationship between the customers data rate and the number of branch encoders is as follows:

$n = R/(1 \times 10^7)$ rounded to the next higher integer if $n \neq$ integer

where n = number of branch encoders within the convolutional encoder

R = channel data rate (bps).

d. KSHR - Three Channels. The KSHR data configurations are defined in Table 5-40.

5.3.2.3.2.4 Decoding Requirements

The KSAR service equipment shall be capable of the following decoding requirements:

a. KSA Channels and KSHR Mode 1 Channel 3.

1. Convolutional, nonsystematic, transparent.

2. Rate: 1/2.

3. Constraint Length: K = 7.

4. Generator Functions: $G_1 = 1111001$

$G_2 = 1011011$.

5. Symbols generated from G_1 will precede symbols generated from G_2 relative to the data bit period.

6. Symbols generated from G_2 will either be true or complemented as defined by the SHO.

b. KSHR Mode 1 and 2, Channel 1.

1. Code 4: convolutional, nonsystematic, nontransparent.

2. Rate: 1/3.

3. Constraint Length: K = 7.

4. Generator Functions: $G_1 = 1111001$
$G_2 = 1011011$
$G_3 = 1100101$.

5. Symbol sequence from the convolutional coding will be symbols generated from G_1, G_2, and G_3 successively relative to the data bit period.

5.3.2.3.2.5 Ambiguity Resolution

a. Data Phase Ambiguity. Data Phase Ambiguity is the uncertainty that the logical sense of the data may be either true or complemented. The data phase ambiguity shall be resolved for all configurations and modes except when the data format is NRZ-L for coded operation and when the data format is either NRZ-L or Biphase-L for uncoded operation.

b. Data Channel Ambiguity. Data Channel Ambiguity is the uncertainty that the I Channel or Q Channel may appear on the USS/DIS interface port designated for the I Channel data, and conversely, the Q or I Channel data may appear on the port designated for the Q Channel. The data channel ambiguity shall be resolved for all configurations and modes except for DG2 dual data channel operation with QPSK, data channel ambiguity shall be resolved for this case if at least one of the following conditions apply.

   1. I/Q (power) is 4:1.

   2. One data channel is coded, the other channel is uncoded.

   3. One channel symbol rate differs by more than 25% from the other channel symbol rate.

c. Data Delay Ambiguity Resolution. The KSAR signal processing algorithms shall not introduce (e.g., via buffering, queuing, clocking, etc.) data delay ambiguities greater than 25% of a symbol duration.

5.3.2.3.2.6 Probability of Error (P_E)

The following probability of error (P_E) requirements shall apply:

a. For the range of error probabilities specified below, the following P_E performance shall be achieved:

$C/N_o = E_b/N_o + 10 \log R_b + L(P_E, R_b)$;

where:
- $10^{-7} \leq P_E \leq 10^{-5}$.
- R_b is the bit rate of the data channel.

- $L(P_E, R_b)$ is the allowable implementation loss (Table 5-41 and 5-42).

- E_b/N_o is the theoretically required value for P_E in an AWGN channel.

b. The specified performance shall be achieved for each data channel.

c. The total C/N_o is referenced at the SGLT antenna input and is defined as follows:

1. QPSK; Dual Data Channel. C/N_o is the combination of the I and Q Channel C/N_os where the individual channel C/N_os are each in accordance with the formulation in Item a.

2. DG1; Balanced QPSK; Single Data Channel. The total C/N_o is in accordance with the formulation in Item a; a maximum 0.1 db additional implementation loss relative to Table 5-41 and 5-42 shall be allowed.

3. DG1; Unbalanced QPSK; Single Data Channel. The total C/N_o is the sum of the I and Q Channel C/N_os where only the strong channel C/N_o is in accordance with the formulation in Item a.

4. DG2; SQPSK; Single Data Channel. The total C/N_o is in accordance with the formulation in Item a.

Table 5-41. KSAR and KSHR Allowable Implementation Loss, $L(P_E, R_b)$ - Coded Performance

DATA CHANNEL BIT RATE R_b (Mbps)	E_b/N_o = 4.2 dB $P_E = 10^{-5}$	E_b/N_o = 4.8 dB $P_E = 10^{-6}$	E_b/N_o = 5.4 dB $P_E = 10^{-7}$
0.001	2.5	2.7	3.0
0.01	2.5	2.7	2.9
0.1	2.5	2.7	2.9
1	2.5	2.7	2.9
10	2.5	2.7	3.1
75	3.0	3.2	3.7
150	3.2	3.4	3.9

NOTES

FOR DG1 MODES 1, 2 AND I CHANNEL OF MODE 3, AN ADDITIONAL IMPLEMENTATION LOSS NOT TO EXCEED 0.5 dB SHALL BE ALLOWED.

FOR NRZ-M AND NRZ-S DATA FORMATS, AN ADDITIONAL IMPLEMENTATION LOSS OF 0.1 dB SHALL BE ALLOWED.

FOR DATA BIT JITTER OF 0.1% AN ADDITIONAL IMPLEMENTATION LOSS OF 0.2 dB SHALL BE ALLOWED.

Table 5-42. KSAR and KSHR Allowable Implementation Loss, $L(P_E, R_b)$ - Uncoded Performance

DATA CHANNEL BIT RATE R_b (Mbps)	E_b/N_o = 9.6 dB $P_E = 10^{-5}$	E_b/N_o = 10.6 dB $P_E = 10^{-6}$	E_b/N_o = 11.5 dB $P_E = 10^{-7}$
0.001	2.5	2.9	3.3
0.01	2.5	2.9	3.2
0.1	2.5	2.9	3.2
1	2.5	2.9	3.2
10	2.5	2.9	3.2
100	2.7	3.1	3.7
150	3.0	3.5	4.2
300	3.2	3.7	4.4

NOTES

FOR DG1 MODES 1, 2 AND I CHANNEL OF MODE 3, AN ADDITIONAL IMPLEMENTATION LOSS NOT TO EXCEED 0.5 dB SHALL BE ALLOWED.

FOR NRZ-M AND NRZ-S DATA FORMATS, AN ADDITIONAL IMPLEMENTATION LOSS OF 0.3 dB SHALL BE ALLOWED.

FOR DATA BIT JITTER OF 0.1% AN ADDITIONAL IMPLEMENTATION LOSS OF 0.4 dB SHALL BE ALLOWED.

5. KSHR.

   (a) Mode 1: Three Digital Data Channels. The specified P_E performance for Channels 1, 2, and 3 shall be $P_E = 10^{-7}$, and shall be achieved with a total C/N_o equal to or greater than the minimum specified for Mode 1 acquisition in Table 5-43.

   (b) Mode 2: Two Digital Data Channels, One TV/Analog Channel. The specified P_E performance for Channels 1 and 2 shall be $P_E = 10^{-7}$, and shall be achieved with a multiburst test signal present on Channel 3, and with a total C/N_o equal to or greater than the minimum specified for Mode 2 acquisition in Table 5-43.

d. The specified performance shall include the degradations from all components in the Antenna Subsystem and in the KSAR service chain.

e. The specified performance shall be achieved under the conditions specified below:

   1. After signal acquisition has been completed and signal tracking has been achieved.

   2. In the presence of additive white gaussian noise and when the signals at the LNA input contain the signal characteristics of Section 5.3.2.3.2.2 and the following additional distortions:

Table 5-43. Acquisition Performance For KSAR And KSHR

SERVICE[2] AND MODE	C/No[1] (dB-Hz)	C[3] OR NC	ACQUISITION TIME[4] (SECONDS)
KSAR			
DG-1, M-1	70	C	1
M-2A	70	NC	1
M-2B	70	NC	3
M-3	70	C	1
DG-2, M-1	70	C	1
M-2A	70	NC	1
M-2B	70	NC	3
KSHR			
MODE 1	89.4	NC	1
MODE 2	87.0	NC	1

NOTES

1 a. DG1
FOR THE 1:1 I/Q CHANNEL POWER RATIO MODE, THE SUM OF THE I AND Q CHANNEL C/N_0's WILL BE EQUAL TO THE SPECIFIED VALUE. FOR THE 1:4 I/Q CHANNEL POWER RATIO MODE, THE Q CHANNEL C/N_0 WILL BE EQUAL TO THE SPECIFIED VALUE. WHEN ONE CHANNEL IS ABSENT SUCH THAT THE REMAINING CHANNEL IS A BPSK SIGNAL, THE C/N_0 WILL BE EQUAL TO THE SPECIFIED VALUE.

b. DG2
FOR BPSK MODULATION, THE C/N_0 WILL BE EQUAL TO THE SPECIFIED VALUE. FOR THE 1:1 I/Q CHANNEL POWER RATIO QUADRIPHASE MODULATION, THE SUM OF THE I AND Q CHANNEL C/N_0's WILL BE EQUAL TO THE SPECIFIED VALUE. FOR THE 4:1 I/Q CHANNEL POWER RATIO QUADRIPHASE MODULATION, THE I CHANNEL C/N_0 WILL BE EQUAL TO THE SPECIFIED VALUE.

c. KSHR
THE C/N_0's LISTED ARE THE TOTAL C/N_0's FOR EACH MODE.

d. SIGNAL ACQUISITION IS REQUIRED FOR KSAR SERVICE DATA RATES ≥ 1000 bps. THE MINIMUM BIT RATES FOR KSAR SERVICE ACQUISITION CORRESPONDING TO 70 dB-Hz FOR THE VARIOUS DATA GROUPS, MODES, AND CUSTOMER SIGNAL STRUCTURES (I.E., MODULATION, I/Q POWER RATIO, CODE RATE, DATA FORMAT) ARE CALCULATED USING THE C/N_0 FORMULATION IN PARAGRAPH 5.3.2.3.2.6 AND THE E_b/N_0s AND IMPLEMENTATION LOSSES, $L(P_E, R_b)$s, DEFINED IN TABLES 5-41 AND 5-42 FOR $P_E = 10^{-5}$.

2 a. MODES 2A AND 2B FOR DG-1 AND DG-2 ARE DEFINED TO BE SUCH THAT THE RECEIVED CARRIER FREQUENCY UNCERTAINTIES DUE TO CUSTOMER SPACECRAFT TRANSMITTER UNCERTAINTIES WILL NOT EXCEED THE FOLLOWING VALUES:

MODE	KSA
2A	± 5 kHz
2B	± 20 kHz;

b. THE KSHR TRANSMITTED CARRIER FREQUENCY UNCERTAINTY WILL NOT EXCEED ± 500 kHz.

3 C AND NC DENOTE COHERENT TURNAROUND AND NONCOHERENT TURNAROUND, RESPECTIVELY.

4 PN CODE AND CARRIER ACQUISITION FOR KSAR. CARRIER AND SUBCARRIER ACQUISITION FOR KSHR MODE 1. SUBCARRIER ACQUISITION FOR KSHR MODE 2.

(a) TDRS induced Distortions[1].

(1) Gain non-flatness over ± 80 MHz passband[2] (total is sum of tilt plus parabolic plus ripple)

1. tilt $\pm A_L \times \Delta F$ dB where $0 < A_L \leq 2.63 \times 10^{-2}$

2. parabolic $\pm A_p \times (\Delta F)^2$ dB where $0 < A_p \leq 4.69 \times 10^{-5}$

3. ripple Sinusoidal, less than 2 dB peak-to-peak, ripple period > 20 MHz

(2) TDRS-induced phase distortion (excluding delay) is represented over a ± 80 MHz passband by the sum of cubic, parabolic, and sinusoidal ripple components as:

$$\varphi(\Delta F) = a_0 \sin\left(\frac{2\pi\Delta F}{P} + \psi\right) + a_1(\Delta F)^2 + a_2(\Delta F)^3,$$

where ΔF is the offset from center frequency in MHz. The set of parameters (a_0, a_1, a_2, P, ψ) is essentially constant for a given KSAR channel on a given TDRS, and for every channel the associated parameter set satisfies:

$$a_0 \leq 6°$$
$$|a_1| < 1.13 \times 10^{-3}\ °$$
$$|a_2| < 1.4 \times 10^{-5}\ °$$
$$P \geq 20 \text{ MHz}$$
$$0 \leq \psi \leq 2\pi$$

These constraints ensure that the phase characteristics lie within the envelope defined by Figure 5-25.

(3) 3-dB Bandwidth 240 MHz

(4) AM/PM Conversion (TWTA) ≤ 6°/dB (AM/PM shall not be included in Implementation Loss)

(b) Customer Spacecraft Induced Distortions.

(1) Gain Flatness < 0.3 dB (peak) over ± 80 MHz

(2) Phase Nonlinearity < 3° (peak) over ± 80 MHz

(3) Gain Slope < 0.1 dB/MHz over ± 80 MHz

---

[1] Impairment (a)(1) is introduced prior to amplification by the TWTA.

[2] ΔF is the deviation from center frequency in MHz.

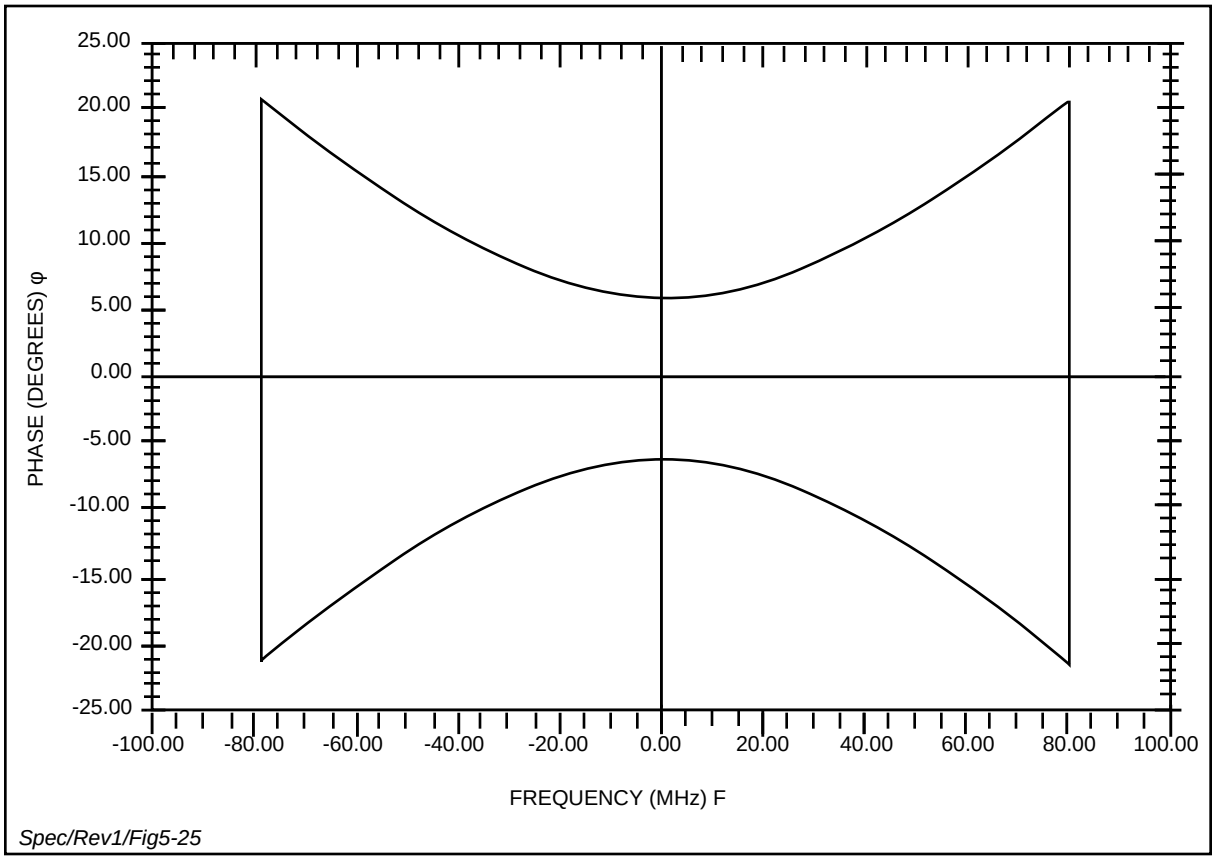

Figure 5-25. TDRS Induced KSAR Phase Distortion Region

(4) 3 dB Bandwidth	DG1: ≥ 4.5 MHz or two times maximum baud rate, whichever is larger. DG2: ≥ two times maximum baud rate. KSHR: ≥ 200 MHz

3. For all KSAR signal parameters and data configurations specified in Sections 5.3.2.3.2.1 and 5.3.2.3.2.3, respectively.

f. The performance of the demodulator(s) shall meet or exceed the Probability of Error (P_E) specified in Tables 5-41 and 5-42 over the range of carrier to noise density ratios (C/N_o) specified, from the value required for a probability of error of 10^{-5} to a value 12 dB greater.

5.3.2.3.2.7 Acquisition Performance

For signal acquisition, the SGLT will be provided with vectors describing the customer spacecraft dynamics in accordance with Appendix A. The vectors will include an epoch time uncertainty of ≤ ± 4.5 seconds.

a. Autotrack Acquisition. Autotrack acquisition time shall be measured from the instant at which customer signal energy is present at the KSA autotrack signal processing input

until autotrack acquisition is achieved. Autotrack acquisition is achieved when the autotrack error signals are being used to maintain the required 0.06° circular pointing error. The following acquisition performance requirements shall apply:

1. Autotrack acquisition shall be achieved within 10 seconds with a probability > 0.99 for C/N_o's 6 dB below those values specified in Table 5-43, or 6 dB below the C/N_o required for $P_E = 10^{-5}$, whichever is greater.

2. Autotrack acquisition and subsequent autotracking shall be achieved for customer incidental amplitude modulation (AM) of < 0.6%, 10 Hz to 2 kHz; and < 3.0%, 10 Hz to 10 kHz.

3. The specified C/N_o is referenced at the SGLT LNA output.

4. In the event that autotrack acquisition does not occur within the time specified, the acquisition process shall continue until autotrack acquisition occurs, or until a reacquisition is requested, or until the end of scheduled service.

b. PN Code Carrier Acquisition. Acquisition time shall be measured from the instant at which sufficient C/N_o as defined by Table 5-43 is present at the receiver/demodulator input and shall include the time to acquire the PN code (if applicable) and carrier. The following acquisition performance requirements shall apply:

1. The KSAR acquisition time shall not exceed the values specified in Table 5-43, for the C/N_o values identified in Table 5-43 or the C/N_o required for $P_E = 10^{-5}$, whichever is greater, and the signal dynamics indicated in Section 5.3.2.3.2.2e.

2. The specified C/N_o is referenced at the SGLT LNA output.

3. The probability of acquisition (P_{acq}) for the times specified in Table 5-43 shall be ≥ 0.9.

4. When PN code acquisition is required, the time to acquire includes time to search the PN code uncertainty.

5. In the event that acquisition does not occur within the time specified, the PN code shall be searched until acquisition occurs, or until a reacquisition is requested, or until the end of scheduled service.

c. Symbol Synchronization (Uncoded Data Only). Symbol Synchronization time shall be measured from the time carrier acquisition is achieved to the time symbol synchronization is achieved. Symbol Synchronization is defined as having been achieved when the error rate for the next 1000 bits is 10^{-5} or less.

For the minimum data transition density and the minimum specified C/N_o values required for 10^{-5} P_E performance, the time to achieve symbol synchronization shall not exceed the following specified values:

1. 300/(data rate in bps) for Biphase symbol formats, with 90% probability.

2. 3000/(data rate in bps) for NRZ symbol formats, with 90% probability.

d. Symbol/Decoder Synchronization (Rate -1/2 Coded Data Only). Symbol/Decoder Synchronization time shall be measured from the time carrier acquisition is achieved to the time decoder synchronization is achieved. Decoder synchronization is achieved when the Viterbi decoder has selected and implemented the correct blocking of the input symbols (into groups of (G1, G2) symbol pairs). Requirements for bit error probability and symbol slipping take effect at the time decoder synchronization is achieved.

For the purposes of decoder synchronization, the minimum data bit transition density is 64 randomly distributed data bit transitions within any sequence of 512 data bits with no more than 64 consecutive data bits without a transition. For the minimum symbol and data transition densities and the minimum specified C/N_o values required for 10^{-5} P_E performance, the time to achieve symbol/decoder synchronization (in seconds) shall not exceed the following specified values:

1. Biphase symbol formats: 1100/(data rate in bps), with 99% probability.

2. NRZ symbol formats: 6500/(data rate in bps), with 99% probability.

e. Shuttle Subcarrier Acquisition. Shuttle subcarrier acquisition shall occur when Channel 2 does not contain data modulation. For this unmodulated channel, the symbol transition density is zero thus precluding symbol synchronization as described in c. above. After subcarrier acquisition, subcarrier tracking shall be maintained for this configuration.

f. Symbol/Decoder Synchronization (KSHR Mode 1 and 2, Channel-1 Only). Symbol/Decoder synchronization time shall be measured from the time subcarrier acquisition is achieved to the time decoder synchronization is achieved. Decoder synchronization is achieved when the Viterbi decoder has selected and implemented the correct blocking of the input symbols (into groups of (G1, G2, G3) symbol triplets), and the correct polarity of the input symbols. Requirements for the bit error probability and symbol slipping take effect at the time decoder synchronization is achieved.

For the purposes of decoder synchronization, the minimum data bit transition density is 64 randomly distributed data bit transitions within any sequence of 512 data bits with no more than 64 consecutive data bits without a transition. For the minimum symbol and data transition densities and the minimum specified C/N_o values required for 10^{-7} P_E performance, the time to achieve symbol/decoder synchronization (in seconds) shall not exceed the following specified values:

1. 1600/(data rate in bps), with 99% probability.

5.3.2.3.2.8 Bit Slippage

a. Normal Transition Density. The mean time between slips caused by a cycle slip in the symbol clock recovery loop shall be either no less than 90 minutes or no less than 10^{10} clock cycles, whichever is greater, for the C/N_o required for 10^{-5} P_E performance. This requirement applies for transition densities of at least 40% for NRZ symbols and any transition density for biphase symbols.

b. Low Transition Density. The mean time between slips caused by a cycle slip in the symbol clock recovery loop shall be either no less than 90 minutes or no less than 10^{10} clock cycles, whichever is greater, for 1.0 dB more C/N_o than required for 10^{-5} P_E performance. This requirement applies for NRZ symbol transition densities between 25% and 40%.

5.3.2.3.2.9 Mean Time-to-Cycle Slip

The mean time-to-cycle slip in tracking the carrier (and subcarrier for KSHR) shall be greater than or equal to 90 minutes for 3 dB less C/N_o than required for 10^{-5} P_E performance.

5.3.2.3.2.10 False Acquisition

During signal acquisition and signal tracking, KSAR services shall be protected against false carrier acquisition and false acquisition to PN code sidebands.

5.3.2.3.2.11 Loss of Symbol Synchronization

For this requirement, maintenance of symbol synchronization is defined as a minimum mean time between symbol clock cycle slips of 10^6 clock cycles.

a. Normal Transition Density. Symbol synchronization shall be maintained for 3 dB less C/N_o than required for 10^{-5} P_E performance. This requirement applies for transition densities of at least 40% for NRZ symbols and any transition density for biphase symbols.

b. Low Transition Density. Symbol synchronization shall be maintained for 2 dB less C/N_o than required for 10^{-5} P_E performance. This requirement applies for NRZ symbol transition densities between 25% and 40%.

5.3.2.3.2.12 Reacquisition

a. In case of loss of lock condition, the KSAR service equipment, in conjunction with the USS and TT&C ADPE Subsystems as necessary, shall automatically initiate reacquisition using pre-drop-lock data to aid in the reacquisition.

b. If signal (carrier and/or PN) tracking is lost and the customer signal is present, autotracking shall continue during signal (carrier and/or PN) reacquisition.

c. If customer signal is lost during autotrack, the autotrack logic shall utilize the most current autotrack information to maintain SA antenna pointing. If the signal is absent for greater than 60 seconds, SA antenna pointing shall revert to open loop pointing.

d. Reacquisition time shall be less than or equal to that for initial acquisition.

e. If reacquisition fails, the SGLT shall automatically revert to the initial acquisition process and provide notification to the NCC, the TOCC, and the Local MMI.

f. Signal reacquisition shall occur for the Shuttle subcarrier when Channel 2 does not contain data modulation. For this unmodulated channel, the symbol transition density is zero thus precluding symbol synchronization as described in Section 5.3.2.3.2.7c.

5.3.2.3.2.13 C/N_o Variation

The USS KSAR equipment shall accommodate an input C/N_o variation of 12 dB, at a rate not to exceed 10 dB/sec, without requiring a reconfiguration.

5.3.2.3.2.14 Performance Measuring and Monitoring Support

a. Status Measuring and Monitoring. During service, the KSAR equipment shall provide equipment and service performance status data to the USS ADPE Subsystem every second. This data shall include the following:

   1. Service Performance.

      (a) PN Lock.

      (b) Carrier Lock.

      (c) Symbol Lock.

      (d) Decoder Lock (when applicable).

      (e) KSA Autotrack Status.

      (f) C/N_o estimate.

      (g) E_b/N_o estimate.

   2. Equipment Status.

      (a) Power supply status.

      (b) AGC status.

   3. Data Quality Monitoring.

      (a) The DQM parameters are specified in Appendix B.

b. Front Panel Capabilities. To support MTG requirements, all equipment, down to the LRU level, shall incorporate front panel controls, status indicators, and test and monitoring points that include:

   1. Visual on/off status indication.

   2. Visual prime-redundant status indication.

   3. Access to input/output baseband, IF and RF signals and selected voltage levels.

   4. All status provided to the USS ADPE Subsystem.

   5. On/off controls.

   6. Test mode selects.

c. BIT/BITE Monitoring. Provide BIT/BITE monitoring data to the USS ADPE Subsystem.

5.3.2.3.2.15 Additional Signal Distortions

The SGLT input signal will contain additional signal distortions listed in Table 5-44. The SGLT implementation shall provide for operation of all signal processing functions from RF to baseband with an input signal containing these additional distortions.

Table 5-44. Additional Input Signal Distortions

SIGNAL CONSTRAINT[1]	KSAR	KSHR
DATA ASYMMETRY	≤ ± 3%	≤ ± 3%[2]
DATA TRANSITION TIME	≤ 5% OF BIT TIME BUT NO LESS THAN 800 PSEC	< 5% OF BIT TIME BUT NO LESS THAN 800 PSEC[2]
I/Q DATA SKEW (RELATIVE TO REQUIREMENTS FOR I/Q DATA SYNCHRONIZATION)	≤ 3%	N/A
I/Q PN CHIP SKEW (RELATIVE TO 0.50 CHIP)	≤ 0.01 CHIP	N/A
PN CODE POWER SUPPRESSION	≤ 0.3 B	N/A
MODE 2 PN CHIP RATE (RELATIVE TO ABSOLUTE COHERENCE WITH CARRIER RATE)	≤ 0.01 Hz PEAK AT PN RATE	N/A
BPSK PHASE IMBALANCE	≤ ± 3°	< ± 3°[2]
GAIN IMBALANCE	≤ ± 0.25 dB	< ± 0.25 dB[2]
QPSK PHASE IMBALANCE	90 ± 3°	90 ± 3°[2]
AM/PM	≤ 12°/dB	≤ 10°/dB
SPURIOUS PM	≤ 3° rms (100 Hz TO 150 MHz)	≤ 3° rms (100 Hz TO 100 MHz)
INCIDENTAL AM (3σ) FOR BER/TRACKING PERFORMANCE (FREQUENCIES > 10 kHz)	≤ 6%	≤ 6%
FOR TDRSS AUTOTRACK PERFORMANCE 2 kHz TO 10 kHz 10 Hz TO 2 kHz	≤ 3% ≤ 0.6%	≤ 3% ≤ 0.6%

NOTES

[1]SIGNAL CONSTRAINT DEFINITIONS ARE PROVIDED IN 530-SNUG, APPENDIX E.

[2]FOR MODE 1 AND CHANNELS 1 AND 2 OF MODE 2.

5.3.2.3.2.16 KSAR IF Interface Port

A KSAR IF interface port shall be provided to access the KSAR service signal prior to demodulation. Table 5-45 specifies the performance requirements of the IF interface port.

Table 5-45. KSA Return IF Port Requirements

A. CENTER FREQUENCY (WITH NO DOPPLER)	370 MHz
B. OUTPUT BANDWIDTH (MINIMUM)	225 MHz
C. OUTPUT IMPEDANCE	50 OHMS
D. VSWR	1.3:1 MAX, OVER 370 MHz ± 80 MHz
E. OUTPUT SIGNAL LEVEL	-15 dBM, ± 3 dB
F. SPURIOUS SIGNALS:	
SUM OF ALL SPURIOUS SIGNALS WITHIN OPERATING BANDWIDTH	≥ 30 dB BELOW DESIRED SIGNAL
INDIVIDUAL SPURIOUS SIGNALS	≥ 40 dB BELOW DESIRED SIGNAL

5.3.2.3.2.17 KSHR Analog Channel Performance

Analog TV performance shall meet or exceed the following specifications for all specified data loading conditions on Channels 1 and 2.

a.	Output SNR (measured with 1 MHz sine wave modulation peak deviation in 4.2 MHz output bandwidth).	≥ 26 dB with +87 dB C/N_o at the SGLT LNA output.with an 11 MHz
b.	TV output signal to the DIS	Compatible with the television quality requirements of Table 5-46.
c.	Output rms signal to rms intermodulation noise power ratio (measured in presence of 15 kHz sine wave modulation of 11 MHz peak deviation in a band between 150 kHz and 4.2 MHz).	≥ 26 dB with + 87 dB C/N_o at the SGLT ground antenna input.

5.3.2.3.2.18 TDRS SA Antenna Autotrack Error Signal Detection

Autotrack error signal detection shall be as specified below.

5.3.2.3.2.18.1 Error Signal Description

Two error signals, one from each channel of a two-axis monopulse system, are generated on the TDRS for the purpose of closed-loop tracking of each KSA antenna. In the TDRS the two error

Table 5-46. Television Quality Requirements

PARAMETER	TEST SIGNAL	PERFORMANCE OBJECTIVES
SIGNAL-TO-NOISE RATIO (LUMINANCE, WEIGHTED)	FLAT FIELD TEST SIGNAL	44-75 dB (PEAK-TO-PEAK SIGNAL, rms NOISE)
LINEAR WAVEFORM DISTORTION - LINE TIME	COMPOSITE TEST SIGNAL	0-5%
LINEAR WAVEFORM DISTORTION - SHORT TIME	COMPOSITE TEST SIGNAL	525/60 SYSTEM P/B RATIO 0.88 - 1.12 1ST ADJ. LOBE 10% 2ND ADJ. LOBE 5%
ATTENUATION/FREQUENCY CHARACTERISTIC	MULTIBURST	FREQ-MHz dB 0.5 +1.5 TO -0.8 1.25 +1.6 TO -0.8 2.0 +1.7 TO -0.9 3.0 +1.8 TO -0.9 3.6 +1.9 TO -1.0 4.2 +2.0 TO -1.0
DIFFERENTIAL GAIN	COMPOSITE TEST SIGNAL	0-15%
DIFFERENTIAL PHASE	COMPOSITE TEST SIGNAL	-5 TO +5°
REFERENCE: STSOC-PR-400002, INTEGRATION AND VALIDATION TEST PROCEDURES, VOL. III, EXTERNAL VALIDATION TEST PROCEDURES, PARAGRAPH 7.4.		

signals, which are time-multiplexed and pseudo-noise coded, amplitude modulate the KSA return link transmitted to the SGLT. An identical process is provided on the second KSA return link for the second SA Antenna.

The autotrack error signal that is amplitude modulated onto the return link has the form shown below:

(1) $$\underbrace{V_R\cos[\omega_R t + \theta_R(t)]}_{\text{Return Channel Signal}} \cdot \underbrace{[1 + M_e(t)]}_{\text{Error Signal Modulation}} \cdot \underbrace{[1 + N(t)]}_{\text{Incidental AM}}$$

where

ω_R = Return signal RF carrier frequency (radians/sec)

θ_R = Return signal phase modulation and phase offset

$N(t)$ = Incidental AM component (see 530-SNUG, Appendix E)

(2) Form of Error Signal Modulation

$$M_e(t) = \sum_n \frac{\Delta V_n}{V_R} P_S(t - nT_S) \cdot \sum_m P_C(t - mT_C),$$

where ΔV_n = sample of nth error channel voltage (n = 1,2)

V_R = Return Channel Voltage

$-M \leq (\Delta V_n/V_R) \leq +M$, where M = maximum modulation index and M = 0.09.

$P_s(t - nT_s)$ = 1 for $nT_s \leq t \leq (n+1)T_s$
= 0 elsewhere
= time sampling of two error channels with 50% duty factor

$P_c(t - mT_c)$ = A_M for $mT_c \leq t \leq (m+1)\ T_c$, where $A_M = \pm 1$
= Manchester coded pseudo-noise code on error signal

$T_c = 5.0 \times 10^{-4}$ seconds

T_s = .032 second

Modulation Index Magnitude, $0 \leq |M_e(t)| \leq 0.09$

The two KSA monopulse channels, corresponding to the two KSA antenna gimbal axes, are time division multiplexed to form a single error signal wave form. The multiplexed signal switches between error channels every 32 milliseconds.

The pseudonoise code that is applied to the error signal is a 1024-bit Manchester-coded PN sequence. Since each Manchester-coded PN bit becomes two symbols, the total sequence is 2048 symbols long. This 2048-bit sequence operates at a rate of 2000 symbols per second: the entire sequence repeats every 1024 milliseconds. The PN epoch is coincident with the first millisecond of the KSA inner gimbal axis error signal interval. The error signal is amplitude modulated onto the appropriate KSA return link with a modulation index that may be as low as zero during tracking and as high as 0.09 during autotrack pull-in.

For further descriptions, refer to TMO 254, Vol. III, paragraphs 9-173 through 9-192.

5.3.2.3.2.18.2 Error Signal Processing

KSA autotrack signal acquisition shall, in conjunction with the TT&C ADPE Subsystem (Section 5.6.4.2.19), provide autotracking for Ku-band customers. The autotrack acquisition performance requirements and definition of autotrack to be provided are in Section 5.3.2.3.2.7.a. The KSA autotrack signal acquisition shall, as a minimum.

a. Recover the autotrack error signal described in Section 5.3.2.3.2.18.1.

b. Develop an indication of signal presence/absence based on the viability of the recovered error signals.

c. Provide the parameters in Items a. and b. to the TT&C ADPE Subsystem as required to provide autotrack.

d. Provide for configuration, control and calibration by the TT&C ADPE Subsystem as necessary.

5.3.2.3.3 MAR Equipment

The performance requirements for MAR equipment shall be as specified below.

5.3.2.3.3.1 Signal Parameters

The MAR service equipment shall be capable of supporting a return link signal with the parameters as specified in Table 5-47.

Table 5-47. MAR Service Signal Parameters

A. DATA GROUP 1 (DG1)[1]	
1. CUSTOMER CARRIER FREQUENCY (F_1)[2]	
MODE 1	$\frac{240}{221} \times F_R$
MODE 2[6]	CUSTOMER SPACECRAFT OSCILLATOR
2. PN CODE MODULATION	
MODES 1 AND 2	SQPN
3. PN CHIP RATE (CHIPS/SEC)	$\frac{31}{240 \times 96} \times F_1$ ($\approx$ 3M CHIPS/SEC)
4. PN CODE LENGTH (CHIPS)	
MODE 1	$(2^{10} - 1) \times 256$
MODE 2	$2^{11} - 1$
5. PN CODE EPOCH REFERENCE	
MODE 1	
I CHANNEL	EPOCH (ALL 1'S CONDITION) SYNCHRONIZED TO EPOCH (ALL 1'S CONDITION) OF CUSTOMER SPACECRAFT RECEIVED FORWARD SERVICE RANGE CHANNEL PN CODE
Q CHANNEL[3]	EPOCH DELAYED x + 1/2 PN CHIPS RELATIVE TO I CHANNEL PN CODE EPOCH
MODE 2	
I CHANNEL	CUSTOMER SPACECRAFT OSCILLATOR
Q CHANNEL	EPOCH DELAYED 1/2 PN CODE CHIP PERIOD RELATIVE TO I CHANNEL PN CODE EPOCH

Table 5-47. MAR Service Signal Parameters (Cont'd)

6. PN CODE FAMILY	
MODE 1	TRUNCATED 18 STAGE SHIFT REGISTER SEQUENCES; PER STDN 108
MODE 2	GOLD CODES; PER STDN 108
7. SYMBOL FORMAT[4]	NRZ, Biφ-L
8. DATA FORMAT	NRZ-L, NRZ-M, NRZ-S
9. DATA MODULATION	
MODES 1 AND 2	MODULO-2 ADDED ASYNCHRONOUSLY TO PN CODE ON EACH CHANNEL; SQPN
10. MODE 1 DATA RATE RESTRICTIONS[5]	
TOTAL	0.1 - 100 kbps
I CHANNEL	0.1 - 100 kbps
Q CHANNEL	0.1 - 100 kbps
11. MODE 2 DATA RATE RESTRICTIONS[5]	
TOTAL	1 - 100 kbps
I CHANNEL	1 - 100 kbps
Q CHANNEL	1 - 100 kbps

NOTES

[1]THE CUSTOMER SPACECRAFT DATA CONFIGURATIONS ARE DEFINED IN SECTION 5.3.2.3.3.3.

[2]F_R IS THE CARRIER FREQUENCY ARRIVING AT THE CUSTOMER SPACECRAFT; EXCEPT DURING SCHEDULED PERIODS OF DOPPLER COMPENSATION INHIBIT, $F_R = f_o \pm E$, WHERE f_o EQUALS THE NOMINAL CENTER FREQUENCY OF THE CUSTOMER SPACECRAFT RECEIVER AS DEFINED IN THE SCHEDULE AND $E = 70 \times \ddot{R}$ WHERE $\ddot{R} \leq 15$ m/SEC^2

[3]Q CHANNEL PN CODE IS IDENTICAL TO I CHANNEL PN CODE OFFSET x + 1/2 PN CHIPS, WHERE $x \geq 20{,}000$. VALUE OF x IS DETERMINED BY PN CODE ASSIGNMENTS FOR A PARTICULAR CUSTOMER SPACECRAFT (STDN 108).

[4]IF THE TRANSMITTED SYMBOL FORMAT IS NRZ-TO-BIφ-L CONVERTED, THERE WILL BE NO G_2 INVERSION.

[5]DATA SIGNALS ON THE I AND Q CHANNELS MAY BE INDEPENDENT AND ASYNCHRONOUS. IF THE I AND Q CHANNEL DATA SIGNALS ARE INDEPENDENT, THE SUM OF THE DATA RATES ON THE I AND Q CHANNEL MUST NOT EXCEED 100 kb/SEC. IF THE I AND Q CHANNEL DATA SIGNALS ARE IDENTICAL AND SYNCHRONOUS (I.E., SINGLE DATA CHANNEL OPERATIONS), THE CHANNEL DATA RATE MUST NOT EXCEED 100 kb/SEC.

[6]MODE 2A DENOTES MODE 2 WHEN THE CUSTOMER SPACECRAFT OSCILLATOR FREQUENCY UNCERTAINTY IS LESS THAN ± 700 Hz; MODE 2B DENOTES THE CASE WHEN THE UNCERTAINTY IS LESS THAN ± 3 kHz.

5.3.2.3.3.2 Input Signal Characteristics

The signal characteristics of the received MAR signal shall be as specified below:

a. Input Power levels. The received isotropic power (customer signal plus customer-to-TDRS AWGN) from each element (averaged over the 30 element channels) at the SGLT Ku-band antenna will be as follows for clear sky conditions where the clear sky noise temperature is defined as 100°K:

   1. Maximum -139.09 dBmi per element.

   2. Minimum -165.09 dBmi per element.

   3. Nominal -152.09 dBmi per element.

The input signal may contain pulsed RFI with pulse widths up to 5 µs and pulse amplitudes up to 10 dB above the average received power. This input signal shall not cause damage or cumulative degradation to the SGLT equipment. The SGLT implementation shall not extend the effect of each pulse by more than 100 ns and shall provide for the operation of all signal processing functions, from RF to baseband, in the presence of pulsed RFI. Note: The P_E performance requirements of Section 5.3.2.3.3.6 do not apply to this input signal condition. The performance requirements of Section 5.3.2.3.3.6 apply at the nominal input power levels and not over the full range defined above.

b. Nominal Element Center Frequencies.

Channel Number	Frequency (MHz)	Channel Number	Frequency (MHz)
1	13405	16	13517.5
2	13412.5	17	13525
3	13420	18	13532.5
4	13427.5	19	13540
5	13435	20	13547.5
6	13442.5	21	13555
7	13450	22	13562.5
8	13457.5	23	13570
9	13465	24	13577.5
10	13472.5	25	13585
11	13480	26	13592.5
12	13487.5	27	13600
13	13495	28	13607.5
14	13502.5	29	13615
15	13510	30	13622.5

NOTE

The exact received element frequencies are determined by customer/TDRS Doppler, and TDRS/WSC Doppler.

c. Composite Channel Bandwidth (3 dB). 240 MHz, minimum.

d. RF Signal Polarization. Polarization 2, linear.

e. Phase Noise.

1. Customer coherent turnaround	1 Hz - 10 Hz ≤ 2.7° rms. 10 Hz - 1 kHz ≤ 4.0° rms. 1 kHz - 3 MHz ≤ 2.0° rms.
2. Non-coherent mode	1 Hz - 10 Hz ≤ 2.7° rms. 10 Hz - 100 Hz ≤ 2.7° rms. 100 Hz - 1 kHz ≤ 2.7° rms. 1 kHz - 3 MHz ≤ 2.0° rms.

f. Gain Stability (between any of 30 element channels from TDRS).	≤ ± 1.0 dB over ± 2.4 MHz about element channel center frequency. ≤ ± 0.3 dB over 4 hours as measured at the element channel center frequency.

g. TDRSS MA Channel Propagation Time Variation.

1. Between any of 30 element channels from TDRS	≤ 250 nanoseconds
2. Standard deviation across the 30 element channel mean propagation times	≤ 55 nanoseconds
3. Maximum variation of the propagation time of any element channel from its mean propagation time	± 20 nanoseconds

h. Differential Phase Stability (between any of 30 element channels from TDRS over normal operating temperature per 4 hours).	≤ 10° over ± 2.4 MHz about element channel center frequency.

i. Input Signal Dynamics. Frequency and PN chip rate signal dynamics will result from customer spacecraft dynamics specified below:

1. $\dot{R} \leq 12$ km/sec.

2. $\ddot{R} \leq 15$ m/sec^2.

3. $\dddot{R} \leq 0.02$ m/sec^3.

j. Relative I and Q Phase. When identical data is being transmitted on balanced I and Q Channels (single data channel configuration for DG1 modes 1 or 2), the I Channel carrier phase will lead the Q Channel carrier phase by 90°, regardless of data format.

k. I/Q Channel Power Ratio (I:Q). 1:1 to 1:4.

l. Data Rate and I/Q Power Ratios. The data rate will be to within 0.1% of the scheduled data rate, and I/Q power ratio to within ± 0.4 dB of the scheduled power ratio.

m. Identical and Synchronous (time aligned) Data.

1. For input signals with identical and synchronous data on both I and Q Channels and for which the I/Q Channel signal power ratio is 1, the total signal power shall be consistent with that required for a single channel.

2. For input signals with identical and synchronous data on both I and Q Channels for which unequal signal power is provided, the strong channel signal power will be consistent with that required for a single channel.

n. Symbol Transition Density. Within any sequence of 512 symbols, the number of transitions will be greater than or equal to 128 and the maximum number of consecutive symbols without a transition will be less than or equal to 64.

o. Symbol Jitter and Jitter Rate. The symbol jitter and jitter rate will each be less than or equal to 0.1%. The symbol jitter and jitter rate are defined in paragraph 5.3.2.3.2.2.1.

p. The frequency reference for demuliplexing the 30 MAR channels shall be:

1.	Frequency	13731 MHz (Telemetry Carrier).
2.	Frequency Offset	Two-way TDRS doppler offset (F_d) referred to 13731 MHz and where -4 kHz $\leq F_d \leq$ +4 kHz.

5.3.2.3.3.3 Input Signal Data Configurations

The MAR service equipment shall be capable of processing input signals for the following data configurations:

a. DG1 - Single Data Channel.

1. Balanced QPSK; synchronous, identical, convolutionally coded data on each of the I and Q Channels.

2. Unbalanced QPSK; synchronous, identical, convolutionally coded data on each of the I and Q Channels.

3. BPSK; convolutionally coded data (no quadrature component due to customer transponder failure).

b. DG1 - Dual Data Channel.

1. Two independent convolutionally coded (rate 1/2) data signals, one on the I Channel and one on the Q Channel.

5.3.2.3.3.4 Decoding Requirements

The MAR service equipment shall be capable of the following decoding requirements:

a. Code: convolutional, non-systematic, transparent.

b. Rate: 1/2.

c. Constraint Length: K = 7.

d. Generator Functions: $G_1 = 1111001$
$G_2 = 1011011$.

e. Symbols generated from G_1 will precede symbols generated from G_2 relative to the data bit period.

f. Symbols generated from G_2 will either be true or complemented as defined by the SHO.

5.3.2.3.3.5 Ambiguity Resolution

a. Data Phase Ambiguity. Data Phase Ambiguity is the uncertainty that the logical sense of the data may be either true or complemented. The data phase ambiguity shall be resolved for all configurations and modes except when the data format is NRZ-L.

b. Data Delay Ambiguity Resolution. The MAR service equipment shall support unambiguous data delay determination for all equipment service configurations with an accuracy of 25% of a bit period.

5.3.2.3.3.6 Probability of Error (P_E)

The following probability of error (P_E) requirements shall apply:

a. For the range of error probabilities specified below, the following P_E performance shall be achieved.

$$(C/N_o)_{EL} = E_b/N_o + 10 \log R_b + L(P_E, R_b) - G_{TH}$$

where:
- $(C/N_o)_{EL}$ = The applicable element C/N_o for each of the 30 TDRS MA antenna element channels.
- $10^{-7} \leq P_E \leq 10^{-5}$
- R_b is the bit rate of the data channel.
- $L(P_E, R_b)$ is the allowable implementation loss (Table 5-48).

Table 5-48. MAR Allowable Implementation Loss, $L(P_E, R_b)$

DATA CHANNEL BIT RATE R_b (kbps)	E_b/N_o = 4.2 dB $P_E = 10^{-5}$	E_b/N_o = 4.8 dB $P_E = 10^{-6}$	E_b/N_o = 5.4 dB $P_E = 10^{-7}$
0.1	3.5	3.7	4.0
1	3.5	3.7	3.9
10	3.5	3.7	3.9
100	3.5	3.7	3.9

NOTES

IMPLEMENTATION LOSS INCLUDES BEAM FORMING LOSS.

FOR NRZ-M AND NRZ-S DATA FORMATS, AN ADDITIONAL IMPLEMENTATION LOSS OF 0.1 dB SHALL BE ALLOWED.

- E_b/N_o is the theoretically required value for P_E in an additive white gaussian noise (AWGN) channel.
- G_{TH} = The theoretical gain from combining the 30 antenna element channels = 10 log 30 dB.

b. The specified performance shall be achieved for each data channel at the decoder output.

c. The total element C/N_o is referenced at the SGLT antenna input and is defined as follows:

1. DG1; QPSK; Dual Data Channel. The total element C/N_o is the sum of the I and Q Channel C/N_o's per element where the individual channel C/N_o's per element are each in accordance with the formulation in Item a.

2. DG1; Balanced QPSK; Single Data Channel. The total element C/N_o is in accordance with the formulation in Item a; a maximum 0.1 dB additional implementation loss relative to Table 5-48 shall be allowed.

3. DG1; Unbalanced QPSK; Single Data Channel. The total element C/N_o is the sum of the I and Q Channel C/N_o's per element where only the strong channel C/N_o per element is in accordance with the formulation in Item a.

d. The specified performance shall include the degradations from all components in the Antenna Subsystem and in the MAR service equipment.

e. The specified performance shall be achieved under the conditions specified below:

1. After signal acquisition has been completed and signal tracking has been achieved.

2. In the presence of additive white gaussian noise and when the signals at the LNA input contain the signal characteristics of Section 5.3.2.3.3.2 and the following additional distortions:

(a) TDRS Induced Distortions for each element channel.

(1) Gain Flatness — The amplitude deviation will not exceed 0.4 dB peak to peak over any 3.5 MHz segment of the 3 dB passband and 0.6 dB peak to peak over any 5 MHz segment of the 3 dB passband.

(2) Phase Nonlinearity — The phase deviation will not exceed ± 1.0° over any 3.5 MHz segment of 3 dB passband.

(3) Element Channel Bandwidth

(a)	3 dB bandwidth	6 MHz
(b)	18 dB Bandwidth	10 MHz
(c)	40 dB Bandwidth	25 MHz.

(b) Customer Spacecraft Induced Distortions.

(1)	Gain Flatness	< 0.3 dB (peak) over ± 2.1 MHz
(2)	Phase Nonlinearity	< 3° (peak) over ± 2.1 MHz
(3)	Gain Slope	≤ 0.1 db/MHz over ± 2.1 MHz
(4)	3 dB Bandwidth	≥ 4.5 MHz.

3. For all MAR signal parameters and data configurations specified in Sections 5.3.2.3.3.1 and 5.3.2.3.3.3, respectively.

5.3.2.3.3.7 Acquisition Performance

For signal acquisition, the SGLT will be provided with vectors describing the customer spacecraft dynamics in accordance with Appendix A. The vector will have an epoch time uncertainty of ≤ ± 9 seconds.

a. PN Code and Carrier Acquisition. Acquisition time shall be measured from the instant at which sufficient C/N_o as defined by Table 5-49 is present at the receiver/demodulator input and shall include the time to acquire the PN code and carrier. The following acquisition performance requirements shall apply:

1. The MAR acquisition time shall not exceed the values specified in Table 5-49, for the C/N_o values identified in Table 5-49 or the C/N_o required for the $P_e = 10^{-5}$, whichever is greater and the signal dynamics indicated in Section 5.3.2.3.3.2.i.

2. The specified C/N_o is referenced to the MAR link (i.e., the channel resulting from combining the element channels).

3. The probability of acquisition (P_{acq}) for the times specified in Table 5-49 shall be ≥ 0.9.

4. The time to acquire includes time to search the PN code uncertainty.

5. In the event that acquisition does not occur within the time specified, the PN code shall be searched until acquisition occurs, or until a reacquisition is requested, or until the end of scheduled service.

Table 5-49. Acquisition Performance Requirements for MA (PN Code and Carrier)

MODE[2]	REC C/N_o[1] (dB-Hz)	C OR NC[3]	ACQUISITION TIME (SECONDS)
1	36.0	C	1
2A	36.0	NC	1
2B	36.0	NC	3

NOTES

1. a. FOR THE 1:1 I/Q CHANNEL POWER RATIO MODE, THE SUM OF THE I AND Q CHANNEL C/N_o's WILL BE EQUAL TO THE SPECIFIED VALUE. FOR THE 1:4 I/Q CHANNEL POWER RATIO MODE, THE Q CHANNEL C/N_o WILL BE EQUAL TO THE SPECIFIED VALUE. WHEN ONE CHANNEL IS ABSENT SUCH THAT THE REMAINING CHANNEL IS A BPSK SIGNAL, THE C/N_o WILL BE EQUAL TO THE SPECIFIED VALUE.

   b. SIGNAL ACQUISITION IS REQUIRED FOR MAR SERVICE DATA RATES ≥ 100 bps. THE MINIMUM BIT RATES FOR MAR SERVICE ACQUISITION CORRESPONDING TO 36 dB-Hz FOR THE VARIOUS MODES AND CUSTOMER SIGNAL STRUCTURES (I.E., MODULATION, I/Q POWER RATIO, DATA FORMAT) ARE CALCULATED USING THE C/N_o FORMULATION IN PARAGRAPH 5.3.2.3.1.6 AND THE E_b/N_o FOR $P_E = 10^{-5}$ DEFINED IN TABLE 5-48 AND AN IMPLEMENTATION LOSS, $L(P_E, R_b)$, OF 2.5 dB.

2. MODES 2A AND 2B ARE DEFINED TO BE SUCH THAT THE RECEIVED CARRIER FREQUENCY UNCERTAINTIES DUE TO CUSTOMER SPACECRAFT TRANSMITTER UNCERTAINTIES WILL NOT EXCEED THE FOLLOWING VALUES:

   MODE

   2A ± 700 Hz

   2B ± 3 kHz

3. C DENOTES: CUSTOMER COHERENT TURNAROUND; NC DENOTES: CUSTOMER NON-COHERENT TURNAROUND.

b. Symbol/Decoder Synchronization. Symbol/Decoder Synchronization time shall be measured from the time carrier acquisition is achieved to the time decoder synchronization is achieved. Decoder synchronization is achieved when the Viterbi decoder has selected and implemented the correct blocking of the input symbols (into groups of (G1, G2) symbol pairs). Requirements for bit error probability and symbol slipping take effect at the time decoder synchronization is achieved.

For the purposes of decoder synchronization, the minimum data bit transition density is 64 randomly distributed data bit transitions within any sequence of 512 data bits with no more than 64 consecutive data bits without a transition. For the minimum symbol and data transition densities and the minimum specified C/N_o values required for 10^{-5} P_E performance, the time to achieve symbol/decoder synchronization (in seconds) shall not exceed the following specified values:

1. Biphase symbol formats: 1100/(data rate in bps), with 99% probability.
2. NRZ symbol formats: 6500/(data rate in bps), with 99% probability.

5.3.2.3.3.8 Bit Slippage

a. Normal Transition Density. The mean time between slips caused by a cycle slip in the symbol clock recovery loop shall be either no less than 90 minutes or no less than 10^{10} clock cycles, whichever is greater, for the C/N_o required for 10^{-5} P_E performance. This requirement applies for transition densities of at least 40% for NRZ symbols and any transition density for biphase symbols.

b. Low Transition Density. The mean time between slips caused by a cycle slip in the symbol clock recovery loop shall be either no less than 90 minutes or no less than 10^{10} clock cycles, whichever is greater, for 1.0 dB more C/N_o than required for 10^{-5} P_E performance. This requirement applies for NRZ symbol transition densities between 25% and 40%.

5.3.2.3.3.9 Mean Time-to-Cycle Slip

The mean time-to-cycle slip in tracking the carrier shall be greater than or equal to 90 minutes for a 3 dB less C/N_o than required for 10^{-5} P_E performance, or 27.5 dB-Hz, whichever is greater.

5.3.2.3.3.10 False Acquisition

During signal acquisition and signal tracking, MAR services shall be protected against false carrier acquisition and false acquisition to PN code sidebands, including multipath. Multipath is defined as specular reflections with path delay > 700 nsec and < 5 msec, and < -6 dB with respect to the direct signal.

5.3.2.3.3.11 Loss of Symbol Synchronization

For this requirement, maintenance of symbol synchronization is defined as a minimum mean time between symbol clock slips of 10^6 clock cycles.

a. Normal Transition Density. Symbol synchronization shall be maintained for 3 dB less C/N_o than required for 10^{-5} P_E performance. This requirement applies for transition densities of at least 40% for NRZ symbols and any transition density for biphase symbols.

b. Low Transition Density. Symbol synchronization shall be maintained for 2 dB less C/N_o than required for 10^{-5} P_E performance. This requirement applies for NRZ symbol transition densities between 25% and 40%.

5.3.2.3.3.12 Reacquisition

a. In case of loss of lock (PN code and/or Carrier), the MAR service equipment, in conjunction with the USS ADPE Subsystem as necessary, shall automatically initiate reacquisition using pre-drop-lock data to aid in the reacquisition. Reacquisition shall be based on the assumption that the time difference between the actual customer frequency dynamics and the NASA predicted dynamics (based on IIRV's) remains unchanged from the pre-drop-lock difference.

b. Reacquisition time, based on the assumption in a., shall not exceed one-half of the initial acquisition times in paragraph 5.3.2.3.3.7.a and shall be measured from the time when received customer signal level, equal to or greater than the minimum level required for acquisition in Table 5-49, is present at the receiver/demodulator input.

c. Reacquisition shall continue until lock is achieved or until a Customer Service Reacquisition (OPM-02) is received. If lock is not achieved within 10 seconds of loss of lock, an OPM-63 shall be sent to the NCC and the TOCC and Local MMI shall be notified.

5.3.2.3.3.13 C/N_o Variation

The USS MAR Equipment shall accommodate an input C/N_o variation of 12 dB, at a rate not to exceed 10 dB/sec, without requiring a reconfiguration.

5.3.2.3.3.14 Performance Measuring and Monitoring Support

The performance requirements for Performance Measuring and Monitoring Support shall be as specified in Section 5.3.2.3.1.15 with the following additions:

a. Capability shall be provided to permit PMMS test signal injection at RF prior to element separation and at IF prior to beamforming in each MAR signal processor.

b. Capability shall be provided to access MAR return signals at IF after beamforming and at baseband after demodulation decoding.

c. Capability shall be provided, in conjunction with the USS ADPE Subsystem to provide an indication that the beam is formed correctly.

5.3.2.3.3.15 Additional Signal Distortions

The SGLT input signal will contain additional signal distortions listed in Table 5-50. The SGLT implementation shall provide for operation of all signal processing functions from RF to baseband with an input signal containing these additional distortions.

Table 5-50. Additional Input Signal Distortions

SIGNAL CONSTRAINT	MAR
DATA ASYMMETRY	≤ ± 3%
DATA TRANSITION TIME	≤ 5% OF BIT TIME BUT NO LESS THAN 35 NSEC
I/Q DATA SKEW (RELATIVE TO REQUIREMENTS FOR I/Q DATA SYNCHRONIZATION)	≤ 3%
I/Q PN CHIP SKEW (RELATIVE TO 0.50 CHIP)	≤ 0.01 CHIP
PN CODE POWER SUPPRESSION	< 0.3 dB
MODE 2 PN CHIP RATE (RELATIVE TO ABSOLUTE COHERENCE WITH CARRIER RATE)	≤ 0.01 Hz AT PN RATE
BPSK PHASE IMBALANCE	≤ ± 3°
GAIN IMBALANCE	≤ ± 0.25 dB
QPSK PHASE IMBALANCE	90 ± 3°
AM/PM	≤ 12°/dB
SPURIOUS PM (100 Hz TO 3 MHz)	≤ 3° RMS
INCIDENTAL AM (3σ) (AT FREQUENCIES > 10 Hz FOR DATA RATES < 1 kbps; AT FREQUENCIES > 100 Hz FOR DATA RATES ≥ 1 kbps)	≤ 6%
NOTE SIGNAL CONSTRAINT DEFINITIONS ARE PROVIDED IN 530-SNUG, APPENDIX E.	

5.3.2.3.3.16 MA Array Nulling

The USS MAR equipment shall be capable of the following nulling requirements:

a. Null Depth. For a single interferer having a level of 10 dB above the average element power and located outside the main lobe, the interferer signal shall be nulled by at least 10 dB, for 95% of all possible combinations of main lobe positions and interferer locations as defined below:

   1. Null Location. The null locations are fixed points on earth.

   2. Main Lobe. The main lobe is defined as a cone of 3° solid angle, centered about the commanded pointing direction.

3. Interference Bandwidth. The interference signal is constrained to the 6 MHz element channel bandwidth.

b. Adaptation Time. The null shall be applied to the interference signal nominally within 1 second from the time the interference signal appears at the input to the MAR equipment.

5.3.2.4 Interfaces

USS SAR and MAR equipment interfaces are specified in Tables 5-51 and 5-52, respectively. Additional interfaces between the MA service equipment and the USS SSA service equipment shall be provided, as required, for cross-support communications and tracking services.

Table 5-51. USS SAR Equipment Interfaces

FROM	TO	SIGNAL/PARAMETER
CTFS	SAR EQUIPMENT	1 PPS TIME PULSES AND FREQUENCY STANDARD
SAR EQUIPMENT	DIS	BASEBAND CUSTOMER RETURN DATA CUSTOMER DATA CLOCK SIGNALS
USS ADPE SUBSYSTEM	SAR EQUIPMENT	CONFIGURATION COMMANDS EQUIPMENT CONTROL
SAR EQUIPMENT	USS ADPE SUBSYSTEM	PERFORMANCE STATUS EQUIPMENT STATUS TRACKING DATA
PMMS	SAR EQUIPMENT	RF TEST SIGNALS
SAR EQUIPMENT	PMMS	KU-BAND DOWNLINK SIGNAL RECOVERED BASEBAND DATA
KSAR EQUIPMENT	TTCS	KSA AUTOTRACK ERROR SIGNALS
TTCS	KSAR EQUIPMENT	TIMING, SYNCHRONIZATION DATA
TT&C ADPE SUBSYSTEM	KSAR EQUIPMENT	KSA AUTOTRACK EQUIPMENT SETUP COMMANDS (AS NECESSARY)
ANTENNA SUBSYSTEM	RF POWER DIVIDER	COMPOSITE RETURN SIGNAL

Table 5-51. USS SAR Equipment Interfaces (Continued)

ANTENNA SUBSYSTEM	KSA-1R SERVICE CHAIN	DEDICATED RETURN SIGNAL
RF POWER DIVIDER	TTCS	TDRS TELEMETRY TDRS RANGE
SAR EQUIPMENT	USS TRACKING EQUIPMENT	PN EPOCH PULSE PN CLOCK RECOVERED CARRIER

Table 5-52. USS MAR Equipment Interfaces

FROM	TO	SIGNAL/PARAMETER
CTFS	MAR EQUIPMENT	1 PPS TIME TICS FREQUENCY STANDARD
MAR EQUIPMENT	DIS	BASEBAND CUSTOMER RETURN DATA CUSTOMER DATA CLOCK SIGNALS
MA USS ADPE SUBSYSTEM	MAR EQUIPMENT	CONFIGURATION COMMANDS EQUIPMENT CONTROL
MAR EQUIPMENT	MA USS ADPE SUBSYSTEM	PERFORMANCE STATUS EQUIPMENT STATUS TRACKING DATA
PMMS	MAR EQUIPMENT	RF TEST SIGNALS
MAR EQUIPMENT	PMMS	Ku-BAND DOWNLINK SIGNAL RECOVERED BASEBAND DATA
RF POWER DIVIDER	MAR EQUIPMENT	TDRS TELEMETRY CARRIER 30 ELEMENT RETURN SIGNAL
MAR EQUIPMENT	MA TRACKING EQUIPMENT	PN EPOCH PULSE PN CLOCK RECOVERED CARRIER
TTCS	MAR EQUIPMENT	RECOVERED TELEMETRY CARRIER

5.3.3 Tracking Services

This section specifies USS requirements to support SA and MA customer and SSA/MA cross-support tracking services. The functional, performance, and interface requirements are specified in Sections 5.3.3.2, 5.3.3.3, and 5.3.3.4, respectively.

5.3.3.1 Overview and Architecture

This section provides an overview and architecture of an SGLT USS ground equipment supporting SA and MA customer and SSA/MA cross-support tracking services, as defined in Section 5.1.2.b and Table 5-1.

5.3.3.1.1 Capabilities

The USS SA equipment shall provide the following capabilities:

a. Doppler Measurement. The USS shall provide a one-way return link (noncoherent) Doppler measurement or a two-way (coherent turnaround) Doppler measurement.

b. Range Measurement. The USS shall provide a range measurement derived from the forward and return service channels.

c. Time Transfer Support. The USS shall provide a time transfer measurement for two-way links derived from the forward and return range channels.

d. Tracking Data Quality Monitoring. For each active customer tracking service the USS (in conjunction with the USS ADPE Subsystem) shall provide estimates of the tracking data quality.

5.3.3.1.2 Architecture

The reference architecture for the USS SA and MA tracking equipment is shown in Figure 5-26 and Figures 5-7 and 5-14, respectively. The following architectural requirements shall apply:

a. Doppler Extraction (DE) Equipment.

   1. SA Equipment. Prime and redundant DE units shall be dedicated to the prime and redundant SAR service chains, respectively.

   2. MA Equipment. A dedicated DE unit shall be associated with each of the MAR signal processors.

b. Range Extraction (RE)/Time Transfer (TT) Equipment.

   1. SA Equipment. Prime and redundant RE/TT units shall be dedicated to the prime and redundant SAR service chains, respectively. The connectivity of the prime and redundant RE/TT units with the SAF service chains shall be switchable to provide 100% redundancy for the two-way service link. Each RE/TT unit shall accept only one forward service input at any given time.

   2. MA Equipment. Prime and redundant RE/TT units shall be associated with any one of the MAR signal processors. The connectivity of the prime and redundant RE/TT units with the MAF service chains shall be switchable to provide 100% redundancy for the two-way service link. Each RE/TT unit shall accept only one forward service input at any given time.

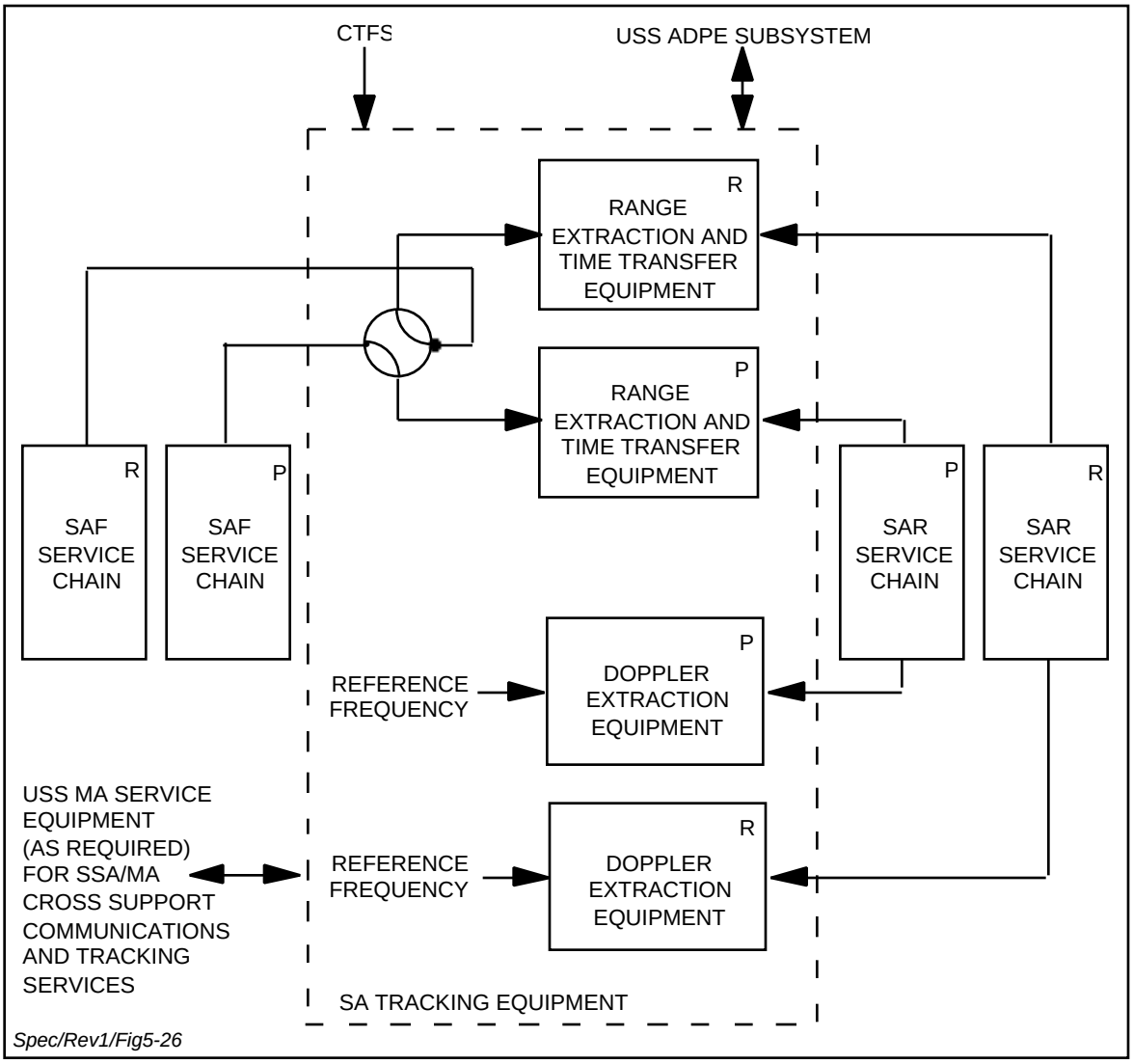

Figure 5-26. USS SA Tracking Equipment Reference Architecture (For 1 SA Service)

5.3.3.1.3 Service Requirement

The USS tracking service requirements relative to SA and MA service mode support configurations shall be as specified in Table 5-53.

Table 5-53. Required Tracking Services For Service Support Configuration

TRACKING SERVICE / SERVICE	ONE-WAY DOPPLER	TWO-WAY DOPPLER	RANGE AND TIME TRANSFER
S-BAND SINGLE ACCESS	DG1 MODE 2 DG2 MODE 2 SHUTTLE MODES 1,2	DG1 MODES 1,3 DG2 MODE 1 SHUTTLE MODES 1,2,3	DG1 MODES 1,3
K-BAND SINGLE ACCESS	DG1 MODE 2 DG2 MODE 2 SHUTTLE MODE 1	DG1 MODES 1,3 DG2 MODE 1	DG1 MODES 1,3
MULTIPLE ACCESS	DG1 MODE 2	DG1 MODE 1	DG1 MODE 1

5.3.3.2 Functional Requirements

Figure 5-27 is a functional diagram of the USS tracking equipment for each SA and MA service. The USS tracking equipment shall perform the following functions:

a. Doppler Measurement. The USS shall provide Doppler measurements when scheduled by comparing the recovered return service carrier frequency with the appropriate reference frequency. The Doppler frequency shall be defined as the difference between the recovered carrier frequency and the reference frequency. The Doppler measurement shall involve the following elements:

   1. For two-way Doppler measurement, the Doppler reference frequency shall be the forward transmit frequency multiplied by the appropriate customer transponder turnaround ratio (240/221 at S-band or 1600/1469 at Ku-band). The forward transmit frequency shall be a multiple of 221 for S-band and 146.9 for Ku-band. All frequencies employed in the downconversion process shall be a direct derivative of the CTFS.

   2. For one-way Doppler measurements, the Doppler reference frequency shall be the NCC-provided customer transmit frequency.

   3. The Doppler Extraction (DE) equipment shall make the measurements needed to fulfill the Doppler requirements of the Tracking Service Data Message as specified in 530-ICD-NCC-FDF/WSC.

b. Range Measurement. The USS shall provide range measurements when scheduled, based upon transmission of the forward link PN code and the reception of the return link PN code:

   1. At one second time epochs, the Range Extraction (RE) equipment shall determine the round trip light time to the customer spacecraft (within the ambiguity of the range PN code period).

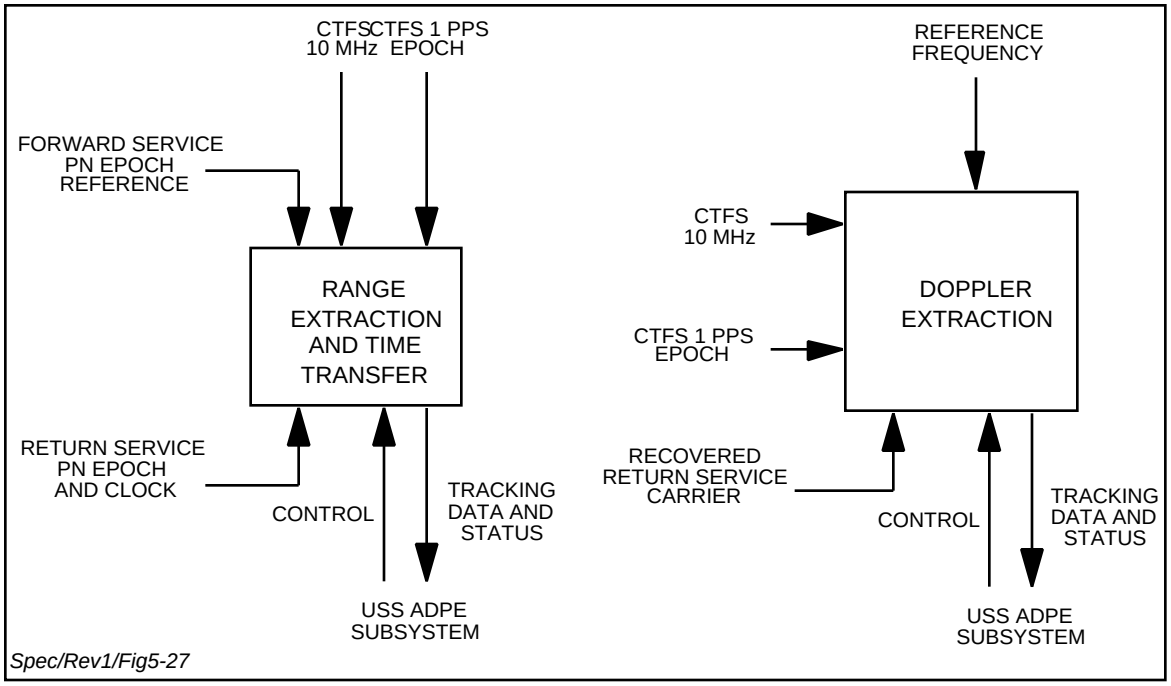

Figure 5-27. Functional Diagram of the USS SA and MA Tracking Equipment

2. The RE equipment, in conjunction with the USS ADPE Subsystem as necessary, shall correct the round trip light time to account for transmit time through the SGLT and the TDRS spacecraft so that the range measurement reported in the Tracking Data message reflects the sum of the paths listed below:

   (a) From a reference point at the intersection of the antenna azimuth and elevation axes to a reference point on the TDRS spacecraft (center of mass).

   (b) From the reference point on the TDRS spacecraft to the customer spacecraft and back.

   (c) From the reference point on the TDRS spacecraft back to the SGLT antenna reference point.

3. The USS and USS ADPE Subsystem shall support the PMMS in the measurement of relevant SGLT transit delays, as required.

c. Time Transfer (TT) Measurement. The time transfer measurement shall consist of the following elements:

1. The TT equipment shall measure the time elapsed between a reference CTFS time epoch and the arrival of the next forward PN epoch pulse, and the time elapsed between the same reference CTFS time epoch and the arrival of the first return PN epoch pulse after the forward PN epoch pulse at the TT equipment.

2. The TT equipment, in conjunction with the USS ADPE Subsystem as necessary, shall provide the correction to the elapsed times to account for transit times through the SGLT. These corrections shall estimate the forward PN epoch departure time from the reference point in the Ku-band antenna and the return PN epoch arrival time at the same reference point.

3. The USS and USS ADPE Subsystem shall support the PMMS in the measurement of relevant SGLT transmit and return data delays, as required.

5.3.3.3 Performance Requirements

5.3.3.3.1 General

When scheduled, the USS tracking equipment shall support Doppler tracking, range tracking and time transfer. This support shall include:

a. For Doppler and range, the USS, in conjunction with the USS ADPE, shall generate the data needed to provide Tracking Data Service Messages specified in 530-ICD-NCC-FDF/WSC with intervals between measurements and reports of 1, 5, 10, 60, or 300 seconds, as scheduled. The staleness of the data provided to the DIS shall not exceed 5 seconds relative to the time of measurement.

b. For Time Transfer service, the USS shall generate the data needed to provide the time transfer message specified in 530-ICD-NCC-FDF/WSC with intervals between measurements of one second. Time transfer service may be scheduled simultaneously with range and Doppler services.

5.3.3.3.2 Doppler Tracking

The USS Doppler extraction equipment performance requirements shall be as specified below.

a. Measurement Error. The rms error of a 1 second average Doppler frequency measurement by the Doppler extraction equipment at C/N_o values as specified in Sections 5.3.2.3.1.6a, 5.3.2.3.2.6a, and 5.3.2.3.3.6.a at the indicated data rates shall not exceed the values specified in Table 5-54. For S-band Shuttle Mode 3 (unmodulated carrier), Doppler tracking services are not required for C/N_o values of less than 38.9 dB-Hz. Note: Phase Noise from sources other than WSC (i.e., TDRS or customer spacecraft) are excluded from the measurement error requirement.

b. Maximum Doppler frequency.

S-band	≤ 230 kHz.
Ku-band	≤ 1.6 MHz.

Table 5-54. Maximum RMS Doppler Frequency Error (Radians/Sec)[1]

DATA RATE (bps)	SSA/MA	KSA
< 500	0.32	N/A
≥ 500 < 1,000	0.24	N/A
≥ 1,000	0.16	0.16

NOTE

[1]THE ERROR VALUES ARE IN ADDITION TO THE UNCERTAINTY INTRODUCED TO THE DOPPLER FREQUENCY MEASUREMENT BY THE ALLOWED ± 25 NSEC UNCERTAINTY OF THE 1-SECOND MEASUREMENT TIME REFERENCE.

c. Maximum Doppler rates.
S-band ≤ 1.5 kHz/sec.
Ku-band ≤ 10.5 kHz/sec.

d. Data Sampling. Within ± 25 nanoseconds of the CTFS timing epoch

e. Measurement Signal Output Parameters.

1. Frequency
S-band $240.\bar{0}$ MHz + 1000 F_d

Ku-band $240.\bar{0}$ MHz + 100 F_d

where F_d is the Doppler frequency and $240.\bar{0}$ MHz is 240.000. . . .MHz where the magnitude of the fractional portion is the accuracy of the ground terminal frequency standard.

2. Sample Rate 1 per second.

3. Output Type Cycle counter digital word readout at 1 second time tick.

4. Cycle Count Capacity 50 minutes continuous cycle count nondestruct.

5. Doppler Counter Initiation The counter shall be set to zero at least 1 second before the start of the tracking service and shall not be reset during a service. (A cycle through a maximum count shall be accommodated with no loss or gain of counts.)

5.3.3.3.3 Range Tracking

The USS range extraction equipment performance requirements shall be as specified below.

a. Range Random Error. The rms random error shall not exceed the values given in Table 5-55 for the C/N_o values specified in Sections 5.3.2.3.1.6a, 5.3.2.3.2.6a, and 5.3.2.3.3.6.a at the indicated data rates.

Table 5-55. Range Measurement Standard Deviation

DATA RATE	SSA/MA	KSA (≤ 300 kbps)
< 1,000 bps	16 nanoseconds	N/A
≥ 1,000 bps	8 nanoseconds	8 nanoseconds

b. Equipment Systematic Error Contribution. After correction for SGLT transit delays, the residual systematic range error contribution to the range measurement from the USS and Antenna Subsystem shall be less than ± 30 nanoseconds.

c. Maximum Doppler Frequency. The maximum Doppler frequency during range measurement shall be:

S-band ≤ 230 kHz.
Ku-band ≤ 1.6 MHz.

d. Maximum Doppler Rate. The maximum Doppler rate during range measurement:

S-band 1.5 kHz/sec.
Ku-band 10.5 kHz/sec.

e. Range Measurement Granularity.

1.0 nanosecond.

f. Data Sampling.

Within ± 1 microsecond of the CTFS timing epoch.

g. Measurement Signal Output Parameters.

1. Range Extractor Output Rate. Once per second.
2. Type Output Device. Digital word readout at 1-second time tag strobe.
3. Duration of Output. Continuous except during the once-per-second update.

5.3.3.3.4 Time Transfer

The performance requirements for the time transfer equipment shall be as specified below:

a. Random Error.

1. The elapsed time between a reference CTFS time epoch and the next arrival of the forward PN epoch pulse at the TT equipment shall be determined with a granularity of 200 nanoseconds.

2. The elapsed time between a reference CTFS time epoch and the next arrival of the return PN epoch pulse at the TT equipment shall be determined with a granularity of 200 nanoseconds.

3. The jitter in the CTFS time epoch at the TT equipment shall be within ± 25 nanoseconds. Time transfer is not required for Shuttle services.

b. Systematic Error.

1. The relevant SGLT equipment time delays (i.e., the corrections to account for transit time through the SGLT) shall be determined to the accuracy required by the ranging service specified in Section 5.3.3.3.3b.

2. The reference CTFS epoch times shall have a systematic error of less than ± 5 µsec relative to true Universal Time Coordinated (UTC) and shall be traceable to true UTC time within ± 100 nanoseconds.

c. The maximum Doppler conditions during the time transfer measurements shall be identical to those of the ranging service specified in Section 5.3.3.3.3.

5.3.3.3.5 Performance Measuring and Monitoring (PMM) Support

a. Front Panel Capabilities. To support the MTG requirements specified in Section 12 all equipment, down to the line replaceable unit (LRU) level, shall incorporate front panel controls, status indicators, and test and monitoring points that include:

1. Visual on/off status indication.

2. Visual prime-redundant status indication.

3. Access to input/output data signals and selected voltage levels.

4. Status indicators for all status provided to the USS ADPE Subsystem.

5. On/off controls.

6. Test mode selects.

b. Status Monitoring. Tracking service equipment shall provide power supply status data to the USS ADPE Subsystem every second.

c. BIT/BITE Monitoring. Provide BIT/BITE monitoring data to the USS ADPE Subsystem.

d. Tracking Data Quality Monitoring. For each active tracking service the USS (in conjunction with the USS ADPE Subsystem) shall provide tracking data quality estimates which shall include the following:

1. Estimates of the noise of the data using digital filtering of the raw tracking data.
2. Consistency checks between raw doppler data and doppler computed by differencing the raw range data.
3. Checks for static range and doppler data.

The data quality estimates shall be used by the USS ADPE in determining failover actions and by the PMM ADPE in evaluating equipment performance.

5.3.3.4 Interfaces

Tracking service interfaces are divided into:

a. Internal Interfaces.

b. External Interfaces.

Additional interfaces between MA and SSA service equipment shall be provided, as required, for cross support services.

5.3.3.4.1 Internal Interfaces

Figure 5-26 and Figures 5-7 and 5-14 illustrate the interfaces internal to the USS associated with the SA and MA tracking service equipment, respectively. Table 5-56 specifies the required interfaces and parameters that shall be transferred.

Table 5-56. Tracking Service Equipment - Internal Interfaces

FROM	TO	PARAMETER(S)
SAR/MAR SERVICE CHAIN	DOPPLER EXTRACTION EQUIPMENT	RECOVERED SERVICE CARRIER, REFERENCE FREQUENCY
SAR/MAR SERVICE CHAIN	RANGE EXTRACTION AND TIME TRANSFER EQUIPMENT	RETURN PN EPOCH PULSE RETURN PN CLOCK
SAF/MAF SERVICE CHAIN	RANGE EXTRACTION AND TIME TRANSFER EQUIPMENT	FORWARD PN EPOCH PULSE FORWARD PN CLOCK

5.3.3.4.2 External Interfaces

Figure 5-27 illustrates the external interfaces associated with tracking services. The external interfaces and parameters transferred shall include those listed in Table 5-57.

Table 5-57. Tracking Service Equipment - External Interfaces

FROM	TO	PARAMETERS
CTFS	DOPPLER EXTRACTION, RANGE EXTRACTION, AND TIME TRANSFER EQUIPMENT	1 PPS TIME TICKS 5 MHz STANDARD
USS ADPE SUBSYSTEM	DOPPLER EXTRACTION, RANGE EXTRACTION, AND TIME TRANSFER EQUIPMENT	EQUIPMENT CONFIGURATION AND CONTROL
DOPPLER EXTRACTION, RANGE EXTRACTION, AND TIME TRANSFER EQUIPMENT	USS ADPE SUBSYSTEM	TRACKING DATA, TIME TRANSFER DATA, EQUIPMENT STATUS

5.4 TT&C Subsystem (TTCS)

5.4.1 Overview and Architecture

a. General. The SGLT TT&C Subsystem, in conjunction with the TT&C ADPE Subsystem and the TOCC, shall support customer services and TDRS operations by providing functions that include:

1. TDRS stationkeeping and attitude control.
2. TDRS orbit determination.
3. TDRS spacecraft and payload configuration control.
4. TDRS resource maintenance, control, and monitoring.
5. TDRS single access antenna (SAA) pointing and polarization control.
6. TDRS SGL antenna pointing control.
7. SGLT antenna pointing control.

b. Compatibility Requirements. The TTCS shall be compatible with existing TDRS design, operations, signaling and performance requirements. These requirements include:

1. TDRS Command Requirements Document No. D01450F.
2. TDRS Telemetry Requirements Document No. D01451F.
3. TDRS RF Interface Requirements: STDN 220.29.
4. TDRS F-7 Interface Control Document for the TDRS Spacecraft/Ground Segment, 405-F7-ICD-001.
5. TDRSS Space Segment Specification: WU-02-01.
6. TMO 253 VOLS I-IV, TDRSS Spacecraft Operations Handbook.
7. TMO 254 VOLS I-III, TDRSS Spacecraft Systems Manual.

These functions shall be performed in direct support of in-orbit and on-station TDRS satellites. No additional SGLT functional requirements shall be imposed in order to support TDRS launch

and insertion. The SGLT shall not be precluded from supporting TDRS launch and insertion using the functions specified in this Specification.

c. Requirements Overview. SGLT TT&C functional and performance requirements are divided into the following areas:

1. TT&C Subsystem (Section 5.4).
2. TT&C ADPE Subsystem (Section 5.6.4).
3. TT&C TDRSS Operations and Control Center (TOCC).

For the purposes of this specification the TT&C ADPE Subsystem specifications are considered part of the CDCN. The TOCC requirements are provided in Section 9. Figure 5-28 provides a descriptive overview of these functional areas.

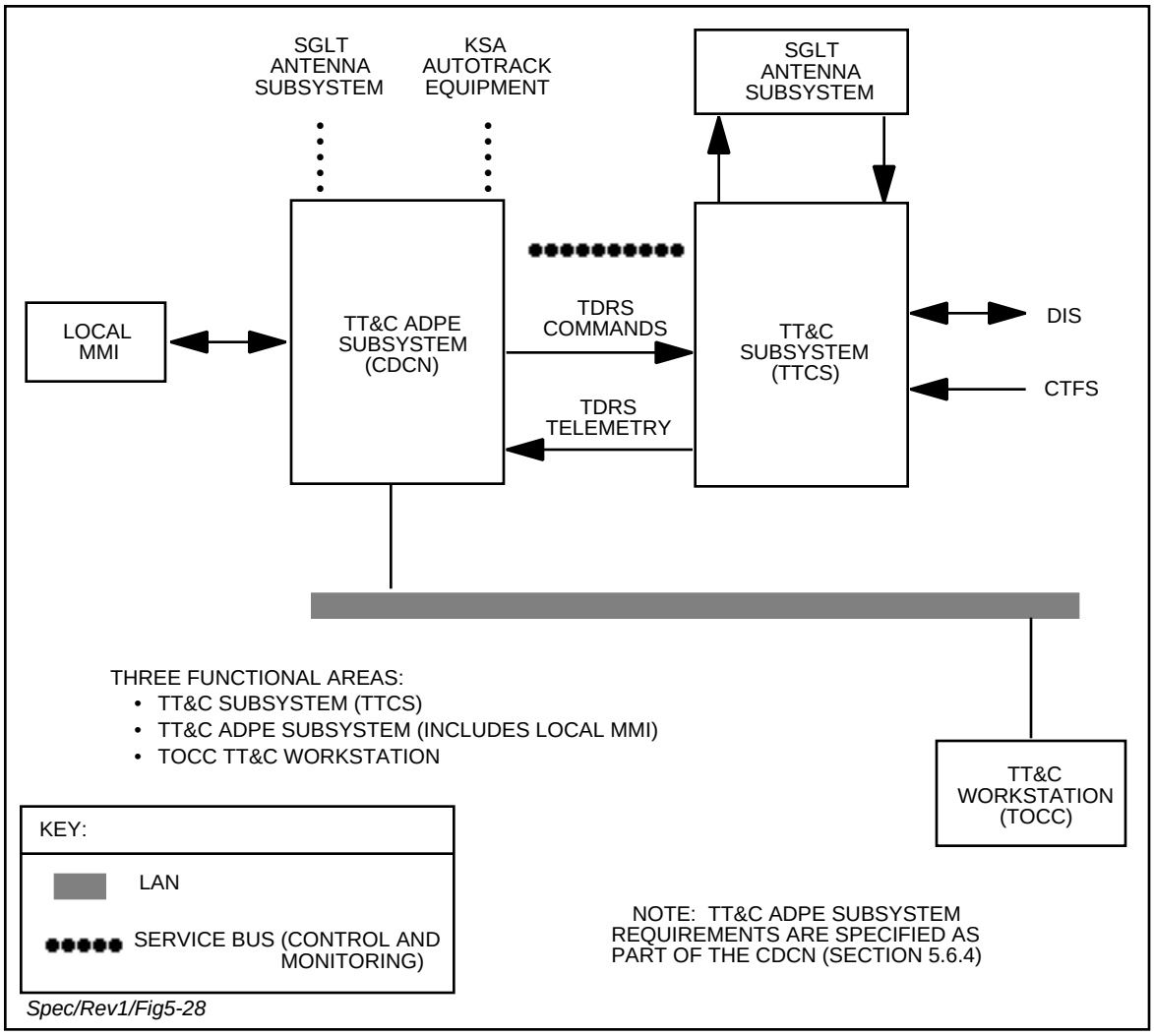

Figure 5-28. TT&C SGLT Functional Area Overview

Interface and operations requirements are specified in Sections 5.4.4 and 5.4.5, respectively.

d. Architecture. Figure 5-29 shows the TT&C Subsystem reference architecture; the following architectural requirements shall apply:

1. The TTCS uplink and downlink equipment shall provide the capability to support a TDRS at either Ku-band or S-band (Danzante and GRGT only).

2. The TTCS uplink equipment shall include one prime equipment chain with a 100% redundant equipment chain; the components of each equipment chain shall each be dedicated to either the prime or the redundant equipment chain, and shall not be interchanged between the equipment chains.

3. The TTCS downlink equipment shall include one prime equipment chain with a 100% redundant equipment chain; the components of each equipment chain shall each be dedicated to either the prime or the redundant equipment chain, and shall not be interchanged between the equipment chains.

4. The prime and redundant range units shall be dedicated to the prime and redundant downlink equipment chains, respectively.

5. Each uplink equipment chain (prime and redundant) shall be capable of being associated with either of the two range units (prime and redundant), but not with both simultaneously.

6. Capability shall be provided so that each uplink equipment chain (prime and redundant) can be operated with either downlink equipment chain (prime and redundant), but not with both simultaneously.

7. The selection of the designated prime downlink and uplink equipment chains shall determine the designated prime range unit (Item 3) and the resulting connectivity of the range units with the uplink equipment chains.

8. The prime and redundant TT&C ADPE Subsystems shall be capable of supporting either the prime or redundant uplink equipment chains, but not both simultaneously (Section 5.6.4).

9. The prime and redundant TT&C ADPE Subsystem shall be capable of supporting either the prime or redundant downlink equipment chains, but not both simultaneously (Section 5.6.4).

10. The selection of TT&C ADPE Subsystem support for the uplink equipment chains shall be independent of the selection of support for the downlink equipment chains (Section 5.6.4).

11. The TTCS PMM (Performance Monitoring and Measuring) test equipment shall not be redundant, and shall be switchable between the prime and redundant downlink equipment chains and between the prime and redundant TT&C ADPE Subsystems.

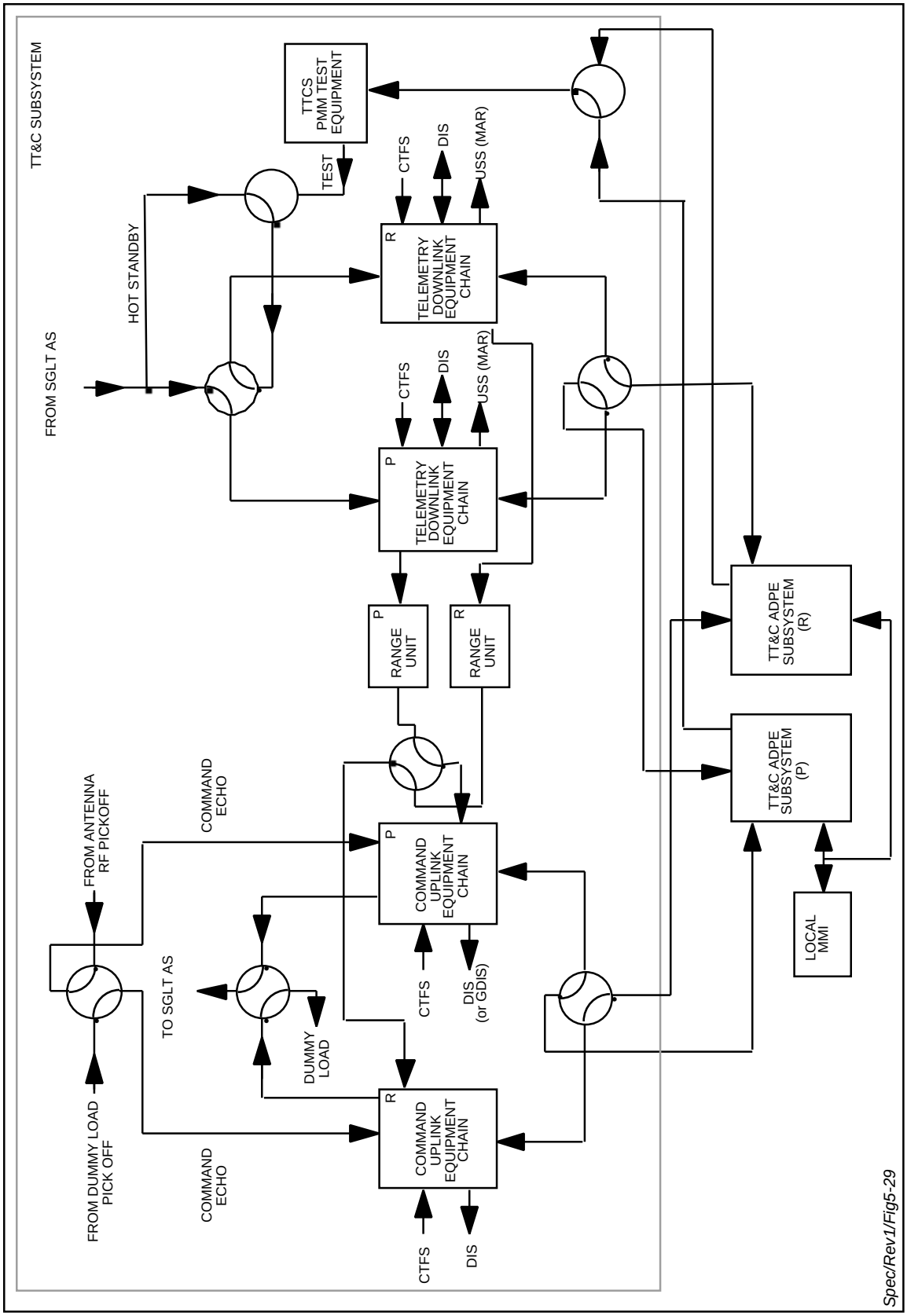

Figure 5-29. TTCS Reference Architecture

5.4.2 Functional Requirements

Figure 5-30 provides the TTCS functional diagram. The equipment shall include a 100% redundant chain that is nominally operating in hot-standby. During non-critical TT&C time periods (i.e., no customer service support and no TDRS operations) the redundant chain may be scheduled for preventive maintenance by the local TT&C Performance Monitoring and Measuring (PMM) function (Section 5.6.4.2.38). The TTCS shall perform the following functions:

a. Transmit.

   1. TDRS command formatting.
   2. Recording of formatted command.
   3. Encryption, as necessary, of the formatted TDRS command data by an MYK-5 encryptor.
   4. Capability to provide TDRS command data to the DIS when requested.
   5. PSK modulation of the uplink subcarrier.
   6. Range signal generation.
   7. Command subcarrier and range signal combining.
   8. Uplink carrier phase modulation.
   9. Frequency conversion to Ku-band or S-band (Danzante and GRGT only).
   10. Pilot tone generation continuously (Ku-band operations only).
   11. Power amplification to achieve specified radiated power.
   12. Switching capability to support the following:
      (a) The distribution of the RF output to either the SGLT antenna subsystem or a dummy load.
      (b) Selection of either the prime or redundant TT&C ADPE Subsystem for support.

b. Receive.

   1. Frequency conversion from Ku-band or S-band (Danzante and GRGT only) to demodulator input frequency.
   2. Demodulation of the composite phase-modulated carrier containing the phase-modulated telemetry subcarrier and range signal.
   3. Demodulation of the telemetry PSK-modulated subcarrier to a digital bit stream.
   4. Bit and frame synchronization of the demodulated telemetry signal.

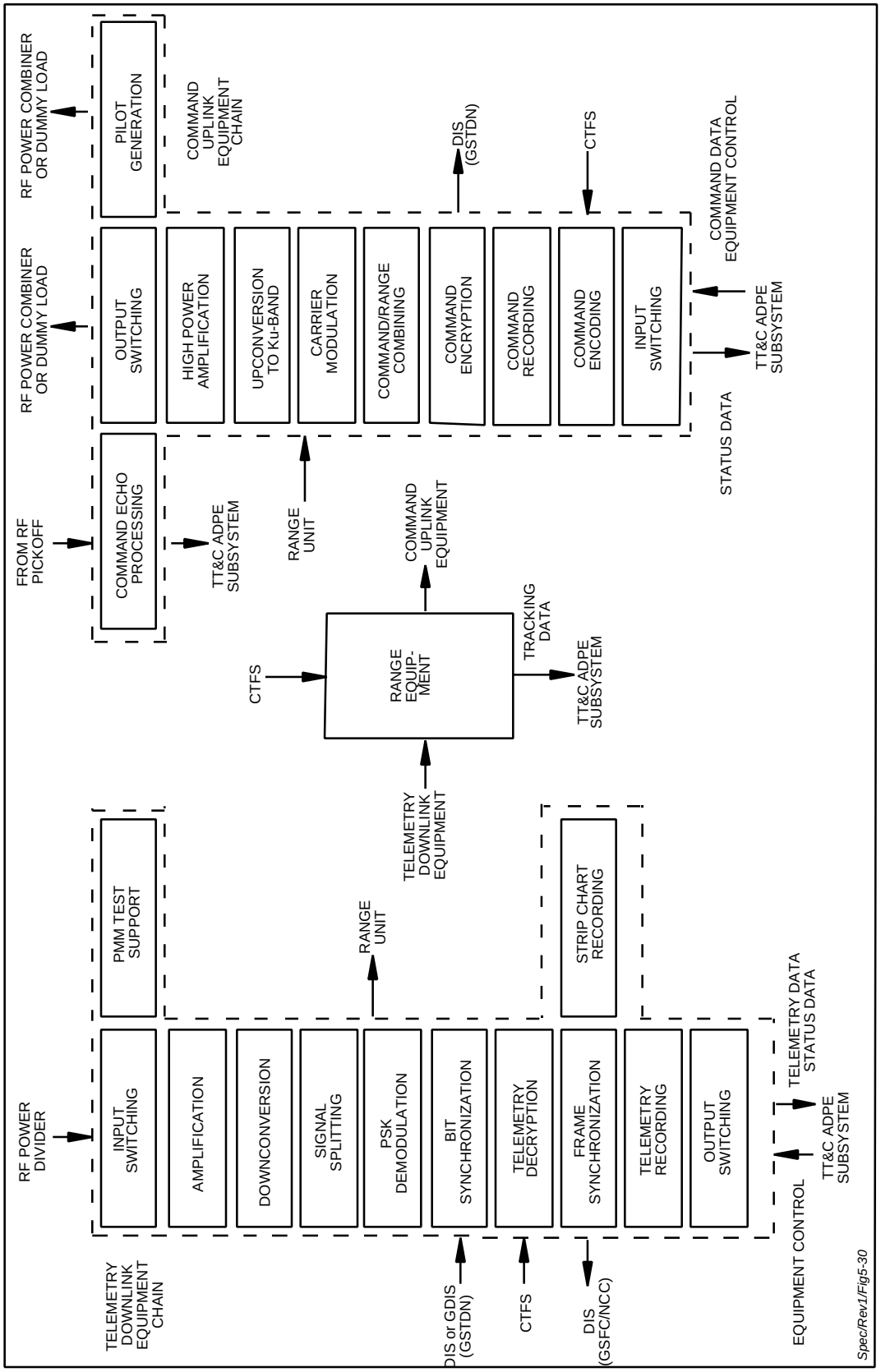

Figure 5-30. TTCS Functional Diagram

5. Capability of receiving telemetry from the DIS when requested.

6. Decryption, as necessary, of TDRS telemetry data by an MYK-5 decryptor.

7. Recording of the decrypted telemetry data.

8. Presentation of the detected telemetry data to the TT&C ADPE Subsystem.

9. Range signal processing.

10. Provide the switching capability to support the following:

    (a) Selection of RF input from either the SGLT antenna subsystem or from the PMM test equipment.

    (b) Selection of either the prime or redundant TT&C ADPE Subsystem for support.

11. Capability to provide clear text TDRS telemetry to the DIS for transmission to the NCC.

c. Uplink TT&C Performance Measuring and Monitoring (PMM) (SGLT Command Echo).

1. Extraction of the RF TDRS command signal and range signal.

2. Presentation of the resulting RF signal to the TTCS Command Echo equipment.

3. Demodulation of the command and range signals to baseband.

4. Decryption, as necessary, of TDRS command data by an MYK-5 decryptor.

5. Formatting and presentation of the baseband data to the TT&C ADPE Subsystem.

d. Downlink TT&C Performance Measuring and Monitoring (PMM Test Equipment).

1. Generation of test telemetry data and test range signals.

2. Encryption, as necessary, of the test telemetry data by a MYK-5 encryptor.

3. Modulation and frequency conversion of the baseband test telemetry data and range signals.

4. Signal injection of test signals.

5.4.3 Performance Requirements

TTCS performance requirements shall be as specified below.

5.4.3.1 RF Transmit Component

The RF Transmit Component shall consist of all the necessary equipment to satisfy the following performance requirements from the interface of the command modulator output to the interface with the SGLT Antenna Subsystem. In the TTCS functional diagram, Figure 5-30, this component is shown as frequency upconversion and high power amplification.

The RF Transmit Component shall continuously transmit a signal which meets the characteristics specified below:

a. Uplink Center Frequency

1. Ku-band	14785.9625 MHz.
2. S-band (Danzante and GRGT only)	2.0359625 GHz.

b. Power Output

1. Ku-band	from 1 W to 800 W
2. S-band (Danzante and GRGT only)	2 kW (nominal)

The capability to adjust the Ku-band output power under TT&C ADPE Subsystem control over the range is specified in 5.4.3.1.b above. There shall be no output power dropout while the level is being changed.

c. RF Bandwidth (3 dB)	3 MHz, minimum.
d. Antenna Polarization (Section 5.2)	
1. Ku-band	Linear (same as polarization 1 of the dedicated KSA return link to an accuracy of ± 0.3°).
2. S-band (Danzante and GRGT only)	Right-hand circular
e. Spurious Outputs (from all sources)	
RMS sum of all in-band spurs (within 1.5 MHz of the carrier)	≥ 30 dB below modulated carrier
Discrete in-band spur (within 1.5 MHz of the carrier)	≥ 40 dB below modulated carrier

f. Frequency Sweep:

The capability to sweep the command carrier frequency under TT&C ADPE Subsystem control shall be provided. The TT&C ADPE Subsystem shall start and stop the sweep. During the sweep, carrier modulation shall be automatically inhibited. There shall be a smooth frequency transition in returning to the nominal carrier frequency. The sweep rate and sweep width shall be selectable via front panel control, via the TOCC, and via the Local MMI as indicated below:

1. Sweep width	± 110 kHz (16 Hz maximum step size).
2. Sweep rate range	1 kHz/sec to 20 kHz/sec (1 kHz/sec maximum step size).

g.	Modulated input signal format	The input command signal format is specified in Section 5.4.3.3.2. The range signal format is specified in Section 5.4.3.5.
h.	1. Ku-band phase noise Total	1 Hz to 10 Hz ≤ 1.4° rms 10 Hz to 32 Hz ≤ 1.4° rms 32 Hz to 1 kHz ≤ 3.9° rms 1 kHz to 6 MHz ≤ 1.0° rms
	Component not coherent with pilot signal	1 Hz to 10 Hz ≤ 1.0° rms 10 Hz to 32 Hz ≤ 1.0° rms 32 Hz to 1 kHz ≤ 1.8° rms 1 kHz to 6 MHz ≤ 1.0° rms
	2. S-band phase noise (Danzante and GRGT only)	1 Hz to 1 kHz ≤ 1.0° rms 1 kHz to 3 Mhz ≤ 0.5° rms
i.	Transmit Signal-to-Thermal Noise Ratio (within ± 1.5 MHz of the carrier)	
	1. Ku-band	≥ 40 dB at full power
	2. S-band (Danzante and GRGT only)	≥ 50 dB at full power
j.	Output carrier power level stability	≤ ± 0.5 dB per 24 hours

5.4.3.2 RF Receive Component

The RF Receive Component shall consist of all the necessary equipment to satisfy the following performance requirements from the interface with the SGLT Antenna Subsystem to the interface with the telemetry receiver processing. In the TTCS functional diagram, Figure 5-30, this component is shown as amplification, downconversion, and signal splitting.

5.4.3.2.1 Input Signal Characteristics

The input signal to the RF Receive Component shall have the following characteristics:

a.	Telemetry Carrier Center Frequency	
	1. Ku-band	13731.0 MHz
	2. S-band (Danzante and GRGT only)	2211.0 MHz
b.	Telemetry carrier effective long term (10 years) frequency stability:	

	1. With pilot tone available for the TDRS spacecraft Master Frequency Generator	± 80 kHz (max)
	2. Without pilot tone (Ku-band only)	± 100 kHz (max)
c.	Doppler Offset (one-way) Synchronous orbit	
	1. Ku-band	± 2 kHz (max)
	2. S-band (Danzante and GRGT only)	± 250 Hz (max)
d.	Received isotropic total signal	
	1. Ku-band	-198.3 dBW (min) -180.0 dBW (max)
	2. S-band (Danzante and GRGT only)	-201.8 dBW (min) -181.8 dBW (max)
e.	Spurious signals Sum of all in-band spurs	≥ 30 dB below unmodulated carrier
	Discrete in-band spur	≥ 40 dB below unmodulated carrier
f.	Incidental amplitude modulation	≤ 2%
g.	Incidental discrete in-band phase modulation	≥ 40 dB below unmodulated carrier
h.	Received isotropic carrier level	
	1. Ku-band	-207.3 dBW (min) -180.0 dBW (max)
	2. S-band (Danzante and GRGT only)	-208.4 dBW (min) -181.8 dBW (max)
i.	Received isotropic telemetry subcarrier level	
	1. Ku-band	-203.9 dBW (min) -180.0 dBW (max)
	2. S-band (Danzante and GRGT only)	-207.8 dBW (min) -181.8 dBW (max)

j.	Received isotropic ranging signal level	
	1. Ku-band	-218.1 dBW (min) -180.0 dBW (max)
	2. S-band (Danzante and GRGT only)	-221.4 dBW (min) -181.8 dBW (max)
k.	Signal format	The telemetry signal format is specified in Section 5.4.3.7. The range signal format is specified in Section 5.4.3.5.
l.	Polarization	
	1. Ku-band	Linear (same as polarization 2 of the composite return link to an accuracy of ± 0.3°).
	2. S-band (Danzante and GRGT only)	Right-hand circular

5.4.3.2.2 Equipment Characteristics

The RF Receive Component shall have the following characteristics:

a.	RF bandwidth (3 dB)	3 MHz, minimum
b.	Carrier acquisition time (Pacq ≥ 0.9) (No ranging modulation during carrier acquisition.)	≤ 10 seconds for minimum carrier levels 9 dB above the minimum level specified in Section 5.4.3.2.1.h.
c.	Sideband phase-lock probability	≤ 0.01
d.	Phase Inversion (Contributions from TT&C Transmit equipment and SGLT antenna are also included.)	No phase inversion shall occur for the range signal.
e.	Amplitude Nonlinearity	≤ ± 0.5 dB (100 kHz to 524 kHz)
f.	Phase Nonlinearity	≤ ± 1.0° deviation from linear (100 kHz to 524 kHz)

5.4.3.2.3 Output Signal Characteristics

For the input characteristics specified in Section 5.4.3.2.1, the output signal characteristics of the RF Receive Component shall be as follows:

a.	Demodulation scale factor variation	
	1. Ku-band	4 dB (max)
	2. S-band (Danzante and GRGT only)	27 dB (max)
b.	Telemetry subcarrier signal-to-noise ratio in 250 Hz bandwidth	
	1. Ku-band	≥ 40.6 dB
	2. S-band (Danzante and GRGT only)	≥ 15.3 dB
c.	Range tone signal-to-noise ratio in 2 Hz bandwidth	
	1. Ku-band	≥ 48.0 dB (equivalent to 37.2 dB in a 24-Hz bandwidth)
	2. S-band (Danzante and GRGT only)	≥ 22.7 dB (equivalent to 11.9 dB in a 24-Hz bandwidth)
d.	Discrete in-band spur from all ground segment sources	≥ 35 dB below the range signal

5.4.3.3 Command Assembly

The Command Assembly consists of command encoding and the command modulation and shall perform as specified below.

5.4.3.3.1 Command Encoding

a. Format and Protocol. The Command Assembly shall be capable of receiving TDRS Command words from the TT&C ADPE Subsystem. The command encoder shall format, as necessary, the command word received from the TT&C ADPE Subsystem to ensure the format and protocol shown in Figure 5-31 and specified below. The command format shall be in compliance with the TDRSS Command Requirements Document D01450F. The following protocol shall be observed:

1. 8-bit Barker Code "Synchronization" preamble shall be as shown in Figure 5-31.
2. All "1"s 3-bit postamble.
3. Bit numbers 1 through 29 of all commands shall be received from the TT&C ADPE Subsystem and may be binary "1" or "0".
4. Bit number 13 is the parity bit and shall always represent odd parity for the modulo-2 sum of Bit numbers 1 through 29.
5. Bit numbers 1 through 5 specify the command processor and satellite for which the command is intended.

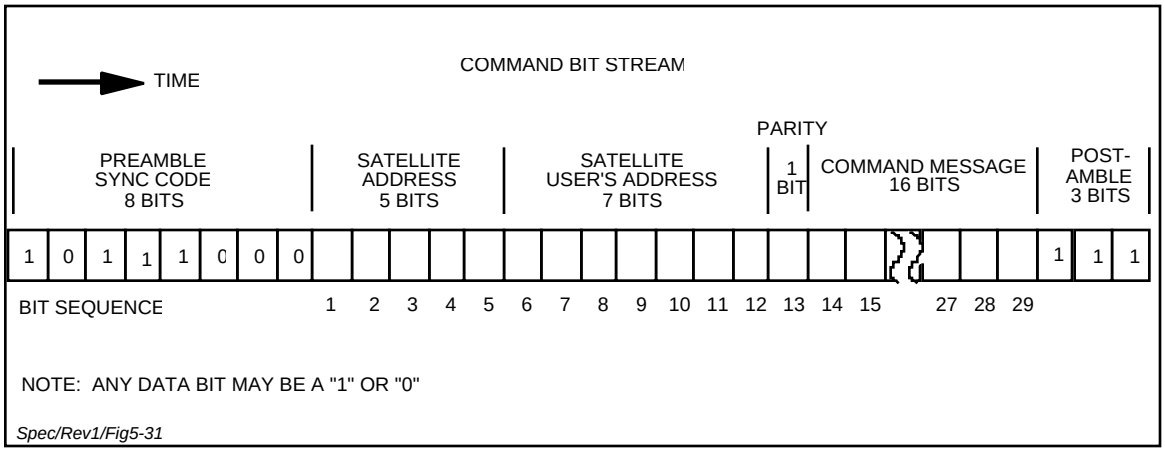

Figure 5-31. TDRSS Command Format After Successful Verification

6. Bit numbers 6 through 12 specify the destination or satellite customer's address within TDRS for which the command is intended.

7. Commands are normally transmitted sequentially without gaps.

8. To provide an "Initialization" preamble, there shall be at least one thousand bits of alternating ones and zeros and 3 valid spacecraft commands for link initiation, with reversion to a pattern of alternating ones and zeros when no commands are available for transmission.

b. Verification. Command encoding shall consist of the following:

1. The command encoder shall verify that command Bit number 13 represents odd parity for Bit numbers 1 through 29.

2. Successful parity verification shall cause the command encoder to forward the formatted 40-bit command word to the command modulator and to send a "busy transmitting" signal to the TT&C ADPE Subsystem.

3. At the time of the completion of a command encoding process (the time at which the 40-bit command word is provided to the command modulator) a "fetch next command" signal shall be sent to the TT&C ADPE Subsystem.

4. A failure of the command encoder to verify that command Bit number 13 represents odd parity for Bit numbers 1 through 29 shall cause the command encoder to generate an interrupt signal to the TT&C ADPE Subsystem and to discard the formatted 40-bit command word. The command is not transmitted and the TOCC is alerted to the failed verification.

5. Command transmission shall commence only when the command encoder has been reinitialized by the TT&C ADPE Subsystem; if not initialized before the next command clock cycle the command encoder shall revert to the transmission of the one/zero pattern; a command cycle is 20 milliseconds.

5.4.3.3.2 Command Modulation

Upon verification of a valid 40-bit command word, the command modulator shall modulate and output the command as specified below.

a.	Data encoding	NRZ-L
b.	Command bit rate	2 kbps coherent with subcarrier
c.	Command subcarrier frequency	16 kHz ± 0.01%
d.	Data modulation Command-clock/subcarrier synchronization accuracy	PSK Data transitions within ± 7.2° of subcarrier zero crossings

5.4.3.3.3 Idle Periods

Upon completion of transmission of a command block to any TDRS F1-F7 spacecraft, the command equipment shall transmit a sequence of data consisting of the first 16 bits of a valid TDRS F-7 command followed by a sequence of alternating ones and zeros, modulated as specified in Section 5.4.3.3.2, until the next command block is available from the TT&C ADPE Subsystem interface.

5.4.3.3.4 Command Signal Filtering

The PSK modulated command signal shall be bandpass filtered prior to being combined with the range signal. Filter characteristics shall be:

a.	Center frequency	16 kHz ± 800 Hz
b.	Bandwidth (3 dB)	12 kHz

5.4.3.3.5 Command and Ranging Signal Combining and Modulation

The command modulator shall:

a. Accept the ranging unit baseband output (Section 5.4.3.5) and combine it with the command signal.

b. Phase modulate the carrier with the modulated 16 kHz command subcarrier and range signal.

c. The modulation indices are specified below:

1. Command Modulation Index 1.0 ± 10% radians

2. Range Modulation Index
   If a BINOR implementation is used:

   (a) Major Tone 0.60 ± 10% radians

   (b) Minor Tone 0.47 ± 10% radians

If a STDN implementation is used:

(a) Major Tone 0.70 ± 10% radians

(b) Minor Tone 0.70 ± 10% radians

d. Modulate the carrier so that the phase difference between the transmitted pilot and command frequencies shall not change more than ± 30° (peak) over a period of 24 hours and at a rate less than 1° per minute.

e. To aid the TDRS in acquiring the command carrier, provide the capability to automatically sweep the carrier frequency:

1. The TT&C ADPE Subsystem shall start the sweep when acquisition of the command uplink by the TDRS is required and shall stop the sweep when telemetry indicates command carrier acquisition by a positive lock status and shall then sweep the carrier to the nominal command carrier frequency.

2. The carrier modulation shall be inhibited during the sweep and return to the nominal command carrier frequency. The carrier modulation shall be enabled when the carrier reaches the nominal frequency. The operator shall have the capability, via a single command request, to stop the sweep and return to the nominal frequency.

3. The sweep rate and sweep range shall be as specified in Section 5.4.3.1.f.

4. The sweep rate shall be selectable via front panel control, via the TOCC, and via the Local MMI.

5.4.3.3.6 Post-Outage Turn-On

Upon sensing turn-on or after any interruption in the transfer of the command outputs, the command equipment shall transmit continuous alternating ones and zeros until the next command is available to be sent.

5.4.3.3.7 Manual Control

Panel switches shall be provided which shall permit an operator to manually control the command equipment to the extent specified in Table 5-58. The initialization preamble (Section 5.4.3.3.1.a.8) shall apply.

Table 5-58. Command Encoder Manual Control Functions

SWITCH	FUNCTION
A. LOCAL/AUTOMATIC	ENABLES/DISABLES LOCAL/AUTOMATIC CONTROL, SIGNALS STATUS TO TT&C COMPUTER
B. DECODER SELECT	SETS COMMAND MESSAGE BITS NO. 1 THROUGH 5
C. DEVICE SELECT	SETS COMMAND MESSAGE BITS NO. 6 THROUGH 12
D. COMMAND SELECT	SETS COMMAND MESSAGE BITS NO. 14 THROUGH 29
E. COMMAND RELEASE	INITIATES TRANSMISSION OF SELECTED COMMAND

5.4.3.3.8 Output to GSTDN

The digital output of KG command encryptor shall be manually reconfigurable for output to the DIS. This output shall include clear text data or encrypted data, as appropriate.

5.4.3.4 Pilot Signal Generation (Ku-band Operations Only)

A Ku-band reference (pilot) tone signal shall be transmitted continuously to the assigned TDRS as specified below:

a. The transmitted signal shall be as specified in STDN 220.29 405-F7-ICD-001, and in Table 5-59.

b. The frequency and frequency stability shall be derived from the Common Time and Frequency Subsystem (CTFS).

Table 5-59. Pilot Signal Characteristics (Ku-band Operations Only)

A. NOMINAL CENTER FREQUENCY	15,150 MHz
B. FREQUENCY SWEEP WIDTH	± 100 kHz (SELECTABLE)
C. SWEEP CONTROL (ON/OFF)	TT&C ADPE SUBSYSTEM OR MANUAL COMMAND ON EQUIPMENT PANEL
D. SWEEP RATE	1 kHz/SEC TO 20 kHz/SEC
E. FREQUENCY STABILITY	CARRIER DERIVED FROM CTFS
F. PHASE NOISE TOTAL	1 Hz - 10 Hz ≤ 1.4° rms 10 Hz - 32 Hz ≤ 1.4° rms 32 Hz - 1 kHz ≤ 3.9° rms 1 kHz - 3 MHz ≤ 1.0° rms
COMPONENT NOT COHERENT WITH CTFS	1 Hz - 10 Hz ≤ 1.0° rms 10 Hz - 32 Hz ≤ 1.0° rms 32 Hz - 1 kHz ≤ 1.2° rms 1 kHz - 3 MHz ≤ 1.0° rms
G. RADIATED POWER TO TDRS, INCLUDING POINTING LOSS	
•A. DANZANTE	ADJUSTABLE IN AT LEAST THIRTY DISCRETE STEPS FROM 59 dBW TO 88 dBW.
•B. CACIQUE	ADJUSTABLE IN AT LEAST THIRTY DISCRETE STEPS FROM 54 dBW TO 83 dBW.
•C. GRGT	ADJUSTABLE IN AT LEAST THIRTY DISCRETE STEPS FROM 59 dBW TO 84 dBW
H. POWER OUTPUT ADJUSTMENTS	POWER OUTPUT UNINTERRUPTED DURING POWER LEVEL CHANGES
I. POWER OUTPUT CONTROL	BY TT&C ADPE SUBSYSTEM VIA THE LOCAL MMI AND THE TOCC, AND MANUAL CONTROL VIA FRONT PANEL, AS SELECTED

Table 5-59. Pilot Signal Characteristics (Ku-band Operations Only) (Continued)

J. OUTPUT CARRIER POWER LEVEL STABILITY	≤ ± 0.5 dB PER 24 HOURS
K. TRANSMIT SIGNAL-TO-THERMAL NOISE RATIO (POWER OUTPUT FROM MAXIMUM TO 2 WATTS)	≥ 40 dB OVER ± 200 kHz ABOUT THE CENTER FREQUENCY
L. LONG TERM DIFFERENTIAL PHASE STABILITY RELATIVE TO COMMAND CARRIER	≤ 30° PEAK OVER 24 HOURS (AT A RATE LESS THAN 1° PER MINUTE)
M. SPURIOUS PM	≤ 2° RMS

c. All equipment necessary to continuously generate and transmit the pilot tone shall be 100% redundant; a functional diagram of one chain of equipment is provided in Figure 5-30.

d. To assist TDRS acquisition of the transmitted pilot, provisions shall be included to sweep the pilot frequency as specified in Table 5-59 and below. Pilot acquisition shall precede the command carrier sweep in the TDRS acquisition sequence.

1. The sweep control (on/off) shall be performed by the TT&C ADPE Subsystem based on the received telemetered lock status of the TDRS pilot tone acquisition/tracking loop.
2. The sweep rate and width shall be controlled by manual control on the equipment panels or by the TT&C ADPE Subsystem.
3. Provision shall be included on the equipment panels for overriding the TT&C ADPE Subsystem control and enabling manual sweep start/stop.
4. There shall be a smooth frequency transition in returning to the nominal carrier frequency.
5. The pilot generator shall react to the start/stop sweep command in ≤ 15 msec.

5.4.3.5 TDRS Ranging Unit

The SGLT TDRS ranging shall be a tone ranging scheme compatible with the existing TDRS signal processing and generation capabilities and shall meet the performance requirements specified below. The ranging subsystem operating through the Ku-band transmit/receive chains shall meet the following performance:

a. Ranging signal-to-noise spectral density ratio of 30 dB-Hz.

b. Initial Range Measurement Time or reacquisition time < 100 sec.

c. Range resolution (one-way) < 3 m.

d. Range accuracy (one-way):

1. Range component (thermal noise, quantization error) < 15 m (1σ).

2. RMS short-term drift (1 sec. to 24 hrs.) and tracking error < 10 m (1σ).

3. Long-Term Systematic error (bias) < 10 m.

4. False ambiguity resolution probability < 10^{-3}.

e. Ambiguity Interval (one-way) > 35 km.

f. The TDRS spacecraft dynamics for which the TDRS Ranging Unit shall meet its specified performance and for which customer services shall be provided are:

	Free Flight	Maneuver
Range Rate: $\dot{R}$ (m/sec)	40	40
Range Acceleration: $\ddot{R}$ (m/sec^2)	0.01	0.016
Range Jerk: $\dddot{R}$ (m/sec^3)	3×10^{-7}	0.14*

* The maximum duration of this value of $\dddot{R}$ is 50 ms.

g. The ranging subsystem shall be capable of satisfying all performance requirements for a ranging link having the following turnaround characteristics in the passband between 3.5 kHz and 530 kHz:

1. Amplitude Ripple	Within ± 2.0 dB of response at 524 kHz
2. Departure from Phase Linearity	± 18° maximum

h. The ranging subsystem shall be capable of performing a self-test loop upon command from the TT&C ADPE Subsystem; the output signal from the range unit to the command modulator shall be routed to the input of the range unit.

5.4.3.5.1 Ranging Baseband Signal and Timing

The ranging signal shall be coherently derived from the CTFS. The epoch of the ranging signal shall be synchronous with the "on-time" edge of the 1 pps marker output of the CTFS.

5.4.3.5.2 Ranging Signal Modulation Structure

The frequency of the highest ranging (major) tone shall not exceed 525 kHz and the modulation structure for ambiguity resolution selected shall avoid mutual interference with the command signal structure at 16 kHz and the telemetry signal structure at 1.024 MHz. Either the Binor or the STDN tone ranging system shall be provided. The required tone frequencies are specified below:

a. Binor tone ranging.

1. Major tone	524.288 kHz.
2. Minor tones	262.144 kHz and 131.072 kHz tones. 262.144 kHz tone biphase modulated by 65.536 kHz square wave; 262.144 kHz tone biphase modulated by 32.768 kHz square

	wave; 131.072 kHz tone biphase modulated by 16.384 kHz square wave; 131.072 kHz tone biphase modulated by 8.192 kHz square wave; 131.072 kHz tone biphase modulated by 4.096 kHz square wave. Each modulated minor tone is added sequentially with the major tone in the order listed during the acquisition process.
b. STDN tone ranging.	
1. Major tone	500 kHz.
2. Minor tones	100 kHz/20 kHz/4 kHz tones. 4 kHz tone with 800 Hz high side complemented (4.8 kHz). 160 Hz/40 Hz/10 Hz tones sequentially, double sideband suppressed carrier modulated on the 4 kHz tone. Each minor tone is combined sequentially with major tone during the acquisition process. The lower tones are optional, as required to meet range ambiguity requirements.

5.4.3.5.3 Command and Telemetry Equipment Interference

The ranging unit shall include pre-transmission filtering as necessary such that the total output power below 48 kHz is at least 36 dB down from the major tone for the Binor ranging system, and the total output power above 750 kHz is at least 36 dB down from the major tone for both Binor and STDN ranging systems.

5.4.3.5.4 Synchronization and Data Timing

The range signal generator shall be synchronized to the "on-time" edge of the 1 pps output of the Time Code Generator such that the output data is implicitly time-tagged to correspond to the completion of the range measurement to an accuracy of 1.0 msec.

5.4.3.5.5 Range Signal Generator

The Signal Generator shall synthesize the waveform for ranging measurements and provide a means for initiating the ranging process. Provisions shall be incorporated to synchronize the ranging waveform with station time. Spurious signals generated by the synthesizer in the region below 1.5 MHz shall be at least 40 dB below the major tone.

5.4.3.5.6 Range Extractor

The range extractor shall utilize the received tones to resolve the ambiguity in the phase of the reference tone. Link delay within the ambiguity interval shall be measured and updated as scheduled by the extractor to yield sequentially independent measures of range.

5.4.3.5.7 Range Zero Set

Provisions shall be incorporated within the ranging assembly for range zero set to take into account the total delay in the baseband/IF/RF path of the TTCS, the Antenna Subsystem and the spacecraft command receiver/telemetry transmitter. The accuracy of zero set shall be equal to 30 nanoseconds or less for the ground equipment. The spacecraft contribution will be known to ± 35 nanoseconds.

5.4.3.5.8 Baseband Filtering

The ranging unit shall provide input filtering as necessary to separate the ranging from the PSK modulated telemetry subcarrier at 1.024 MHz. Maximum telemetry signal to ranging tone ratio will be 24 dB at minimum operating ranging signal level. The ratio shall not exceed 14 dB at maximum operating ranging signal level.

5.4.3.5.9 Spurious Input Signals

Discrete in-band spurious signals shall be at least 15 dB below the highest ranging tone. Total in-band spurious energy shall be at least 5 dB below the highest ranging tone. The ranging accuracy requirements shall not apply when a spur less than 32 dB below the highest ranging tone is within 50 Hz of the tone.

5.4.3.5.10 Initial Range Measurement Time

The maximum time for an initial range measurement (or reacquisition) shall be 100 seconds. This interval shall include the time for acquisition, ambiguity resolution, and range determination.

5.4.3.5.11 Range Readout

The ranging unit shall output range equivalent link delay time to the TT&C ADPE Subsystem. The TT&C ADPE Subsystem shall determine gross range ambiguity.

5.4.3.6 Command Echo Return Chain

The requirements for the Command Echo Return chain shall be as specified below:

a. The Command Echo Return chain shall receive the command uplink signal at RF from the antenna radiated uplink signal.

b. The Command Echo Return chain of the redundant TT&C equipment chain shall receive the command uplink signal at RF from the dummy load that terminates the redundant uplink signal (Figure 5-29).

c. The specified signal characteristics of the command uplink signal shall not be degraded as a result of the Command Echo Return chain function.

d. The signal shall be appropriately downconverted and demodulated to baseband as per the modulation specified in Section 5.4.3.3.2.

e. The baseband data shall be decrypted, as necessary.

f. The probability of error of the detected command bits shall be less than 10^{-7}.

g. The detected serial command word shall be provided to the appropriate TT&C ADPE Subsystem for command verification and logging.

5.4.3.7 Telemetry Assembly

The telemetry assembly shall:

a. Receive a phase-modulated carrier from the Antenna Subsystem.

b. Output the ranging baseband to the Ranging Unit.

c. Demodulate the PSK modulated 1.024 MHz telemetry subcarrier to recover the telemetry bit stream.

d. Bit synchronize to the bit stream and determine bit clock. Provide bit synchronization status to the TT&C ADPE Subsystem.

e. Output the regenerated bit clock and data bit stream to the KG Interface Equipment. During unencrypted transmission this data will be in an NRZ-L format. During encrypted transmission the data will be in an NRZ-M format.

f. Receive the bit rate clock and the NRZ-L formatted data from the KG Interface equipment, frame synchronize to the bit stream and determine frame clock.

g. Record the regenerated telemetry bit stream.

h. Transfer the telemetry frame to the TT&C ADPE Subsystem.

i. Exchange control and status information with the associated TT&C ADPE Subsystem (Section 5.4.3.7.1.b).

j. Achieve a probability of error of 10^{-5} or better, with the signal characteristics shown in Table 5-60.

5.4.3.7.1 Frame Synchronization

a. General. The TDRS telemetry mainframe format consists of 64 consecutive 8-bit telemetry words, with no interbit, interword, or interframe spacing. The first two words (16 bits) constitute the frame synchronization pattern and shall always be coded as follows:

1. FRAMEWORD:	1	2
2. BIT NUMBER:	1 2 3 4 5 6 7 8	9 10 11 12 13 14 15 16
3. SYNC CODE:	1 1 1 0 1 0 1 1	1 0 0 1 0 0 0 0

The frame synchronizer shall read the incoming bit stream from the bit synchronizer, shall search for, verify, and lock onto the frame sync pattern, and shall output a frame synchronization clock pulse. The TTCS shall provide frame synchronization status information to the TT&C ADPE Subsystem that includes the modes specified below.

b. Frame Synchronization Strategy. Programmable frame synchronization capability shall be provided to allow the specification of frame synchronization strategy to recover TDRS telemetry data in an error-free environment, in a high-noise environment, and in the presence of a limited set of spacecraft failures. In particular, the frame

Table 5-60. Telemetry Signal Characteristics And Performance

A. CARRIER ACQUISITION TIME-$P_{ACQ} \geq 0.9$	≤ 20 SEC. FOR CARRIER LEVEL GREATER THAN 9 dB ABOVE MIN.
B. SIDEBAND PHASE-LOCK PROBABILITY	≤ 0.01
C. MODULATION INDEX - TELEMETRY DATA	1.2 ± 10% RADIANS
D. MODULATION INDEX - RANGE TONE IF A BINOR IMPLEMENTATION IS USED: 1. MAJOR TONE 2. MINOR TONE IF A STDN IMPLEMENTATION IS USED: 1. MAJOR TONE 2. MINOR TONE	 0.35 ± 31% RADIANS 0.28 ± 31% RADIANS 0.40 ± 24% RADIANS 0.40 ± 24% RADIANS
E. SUBCARRIER FREQUENCY	1.024 MHz ± 0.003%
F. SUBCARRIER MODULATION	PSK, BY NRZ-L DATA
G. TELEMETRY DATA RATE	250, 1000 AND 4000 bps, AS DESIGNATED BY TT&C ADPE SUBSYSTEM
H. DATA RATE VARIATION	≤ 1%
I. OUTPUT PROBABILITY OF ERROR	$\leq 10^{-5}$ FOR $E_b/N_o \geq 11.6$ dB
J. SUBCARRIER AND BIT SYNC ACQUISITION TIME	≤ 2560 BITS FOR $E_b/N_o > 8.3$ dB AND TRANSITION DENSITY > 25%

synchronization strategy shall enable the specification of allowable errors in the frame sync pattern, the number of acceptable frame sync patterns necessary to change from search to verify, verify to lock, and to drop from lock to either of the other modes. Similar capability shall be provided for subframe synchronization strategy. Table 5-61 shall be used as a guide in the selection of a consistent set of parameters.

c. Telemetry Read Modes. The capability shall be provided to deliver telemetry data to the TT&C ADPE Subsystem under the following selectable modes:

1. Frame lock and subframe lock (normal operation).
2. Frame lock and no subframe lock.
3. Subframe lock and no frame lock.
4. Neither frame lock nor subframe lock.

5.4.3.7.2 Data Output to TT&C ADPE Subsystem

After demodulation of the telemetry subcarrier and obtaining bit and frame synchronization, the telemetry frames shall be transferred to the TT&C ADPE Subsystem.

Table 5-61. Frame Synchronization Protocol

MODES	PROTOCOL	RANGE
1. ALL MODES	NUMBER OF BIT ERRORS ALLOWED PER ACCEPTABLE SYNC PATTERN	0-3 (N_1)
2. SEARCH MODE	NUMBER OF CONSECUTIVE ACCEPTABLE SYNC PATTERNS DETECTED BEFORE MOVING TO VERIFY MODE	1-5 (N_2)
3. VERIFY MODE	NUMBER OF CONSECUTIVE ACCEPTABLE SYNC PATTERNS VERIFIED BEFORE MOVING TO LOCK MODE	1-9 (N_3)
4. LOCK MODE	NUMBER OF CONSECUTIVE NON ACCEPTABLE SYNC PATTERNS DETECTED BEFORE REVERTING TO VERIFY MODE	0-5 (N_4)
5. REVERIFY	NUMBER OF CONSECUTIVE NONACCEPTABLE SYNC PATTERNS DETECTED BEFORE REVERTING TO SEARCH MODE	0-5 (N_5)
NOTE PARAMETERS N_1, N_2, N_3, N_4 AND N_5 SHALL BE SELECTABLE FROM THE RANGE OF VALUES INDICATED ABOVE.		

5.4.3.7.3 GSTDN Input

Input to the bit synchronizer shall be capable of manual connection through a connector so that digital telemetry can be received via the DIS.

5.4.3.7.4 Manual Control

Panel controls shall be available to manually override the TT&C ADPE Subsystem and to set the telemetry data rate to 250 bps, 1 kbps, or 4 kbps. The telemetry data rate shall also be controlled by the TT&C ADPE Subsystem.

5.4.3.7.5 Output to the Strip Chart Recorder Equipment

Output of the recovered serial NRZ-L encoded data from the frame synchronizer shall be available to a strip chart recorder which shall be capable of displaying up to sixteen TDRS telemetry parameters. The sixteen parameters to be displayed shall be selectable at the frame synchronizer and at TOCC workstations and Local MMI. Operational default values of selectable parameters shall be provided. Strip chart recorder pen calibrations shall be provided with a fixed pen cycle rate.

5.4.3.7.6 KSA Autotrack (Ku-band Operations Only)

Output of the bit rate clock, frame sync, subframe sync and lock status flags shall be transmitted to the KSA autotrack equipment, as necessary.

5.4.3.7.7 NCC Output

Output of TDRS telemetry to the NCC via the DIS shall be provided.

5.4.3.8 Strip Chart Recorder Equipment

The Strip Chart Recorder Equipment shall:

a. Receive from the frame synchronizer function of the telemetry equipment, the recovered serial telemetry data.

b. Be capable of displaying sixteen TDRS telemetry parameters.

c. Include a telemetry decommutator for selection of TDRS telemetry parameters.

5.4.3.9 KG Interface Equipment

The KG interface equipment shall perform the following:

a. Telemetry Clear Mode. In the telemetry clear mode, the KG interface equipment shall be capable of introducing the necessary delay into the telemetry data and clock to ensure identical clear and secure mode data and clock delays for KSA autotrack delay compensation if required by the autotrack signal processing.

b. KG Interface Equipment Control. The control of the functions described above shall be specified in Section 5.4.3.12.

5.4.3.10 PMM Test Equipment

To support TTCS local PMM function, the TTCS shall include one set of PMM test equipment. The PMM test equipment shall:

a. Generate baseband serial test telemetry data.

b. Format the data to NRZ-L format.

c. Encrypt the data, as necessary, by an MYK-5 encryptor.

d. Use the test data to PSK modulate a 1.024 MHz subcarrier in accordance with Table 5-60.

e. Generate test range signals, as necessary, in accordance with the TT&C ranging scheme.

f. Use the telemetry and the range signal (if present) subcarrier to modulate the carrier in accordance with Table 5-60.

g. Inject the resultant test signal into the TT&C receive chain as indicated in Figure 5-29.

h. Coordinate with the TT&C ADPE Subsystem to assess the resulting TTCS performance.

5.4.3.11 Performance Measuring and Monitoring (PMM) Support

a. Front Panel Capabilities. To support the MTG requirements, all equipment, down to the line replaceable unit (LRU) level, shall incorporate front panel controls, status indicators, and test and monitoring points that include:

   1. Visual on/off status indication.
   2. Visual prime-redundant status indication.
   3. Access to input/output data signals and selected voltage levels.
   4. Status indicators for all status provided to the TT&C ADPE Subsystem.
   5. On/off controls.
   6. Test mode selects.

b. Status Monitoring and Measuring. TT&C equipment chains (i.e., prime and redundant hot-standby) shall provide service performance and equipment status data to the TT&C ADPE Subsystem every second:

   1. Service Performance Parameters.
      (a) C/N_o (Post LNA) for Telemetry Carrier.
      (b) RF High Power Amplifier (HPA) Power (Command and Pilot (Ku-band Operations Only).
      (c) Uplink Frequency.
      (d) C/N_o estimate.
      (e) E_s/N_o estimate.
      (f) Lock status of telemetry subcarrier, bit sync loops, and frame sync.
      (g) KG security equipment status.
   2. Equipment Status.
      (a) Power supply status.
      (b) Equipment configuration.

c. BIT/BITE Monitoring. Provide BIT/BITE monitoring data to the TT&C ADPE Subsystem.

5.4.3.12 TTCS Equipment Controls

The adjustable or controllable equipment parameters shall include those listed in Table 5-62. All equipment controls designated to the TT&C ADPE Subsystem shall be available to the Local MMI and to the TOCC TT&C Workstation.

Table 5-62. TTCS Equipment Control

ELEMENT	PARAMETER	RANGE	STEPS	CONTROL*
PILOT GENERATOR (KU-BAND OPERATIONS ONLY)	START/STOP SWEEP SWEEP RATE SWEEP WIDTH	- 1-20 kHz/SEC ± 100 kHz	- 1 kHz/SEC MAX 16 Hz MAX	ADPE, PANEL PANEL, ADPE PANEL, ADPE
COMMAND MODULATOR	START/STOP SWEEP SWEEP RATE SWEEP WIDTH	- 1-20 kHz/SEC ± 110 kHz	- 1 kHz/SEC MAX 16 Hz MAX	ADPE PANEL, ADPE PANEL, ADPE
HPA	POWER CONTROL	TABLE 5-2	2.8 dB NOMINAL (3dB MAX)	ADPE
RANGE UNIT	ACQUISITION START SELF TEST RANGE ZERO SET	- - -	- - CONTINUOUS	ADPE ADPE PANEL, ADPE
KG INTERFACE EQUIPMENT	LOCAL/REMOTE SELECTION TLM SECURE OFF/ON(BYPASS) CMD SECURE OFF/ON(BYPASS) CMD OUTPUT TO DIS SELECT TLM DELAY	- - - - -	- - - - 10µs	PANEL PANEL (NOTE 1) PANEL (NOTE 1) PANEL PANEL
COMMAND ASSEMBLY	MANUAL CMD INPUT CMD OUTPUT TO DIS SELECT	- -	- -	PANEL PANEL
TELEMETRY ASSEMBLY	GSTDN INPUT SELECT BIT RATE SET	- 1 kbps, 4 kbps, 250 bps	- -	PANEL PANEL, ADPE

NOTE 1: KG EQUIPMENT BYPASS SHALL NOT BE UNDER ADPE CONTROL

*'PANEL' MEANS: CONTROL AVAILABLE ON FRONT EQUIPMENT PANEL;

*'ADPE' MEANS: CONTROL FROM THE LOCAL MMI AND THE TOCC TT&C WORKSTATION VIA THE TT&C ADPE SUBSYSTEM.

5.4.4 Interfaces

The TTCS interface shall include the parameters listed in Table 5-63 and Figure 5-32. SGL uplink and downlink RF interface requirements shall be as specified in STDN 220.29 and 405-F7-ICD-001.

Table 5-63. TTCS Interfaces

FROM	TO	PARAMETER
TT&C ADPE SUBSYSTEM	TTCS	TDRS COMMAND TDRS RANGE REQUESTS EQUIPMENT CONTROL COMMANDS (TABLE 5-41) EQUIPMENT CONFIGURATION COMMANDS
TTCS	TT&C ADPE SUBSYSTEM	TDRS TELEMETRY DATA TDRS RANGE DATA EQUIPMENT STATUS SERVICE PROCESSING STATUS GSTDN TDRS TELEMETRY TELEMETRY SYNCHRONIZATION DATA AS REQUIRED
USS	TTCS	TELEMETRY RF SIGNAL
TTCS	USS	COMMAND RF SIGNAL PILOT SIGNAL RECOVERED TELEMETRY CARRIER
DIS	TTCS	GSTDN TDRS TELEMETRY
TTCS	DIS	GSTDN TDRS COMMAND, NCC TDRS CLEAR TEXT TELEMETRY
CTFS	TTCS	1 PPS, 5 MHz STANDARD
TTCS/TELEMETRY EQUIPMENT	USS/KSA AUTOTRACK EQUIPMENT	BIT RATE CLOCK, FRAME SYNC, AND LOCK STATUS FLAG

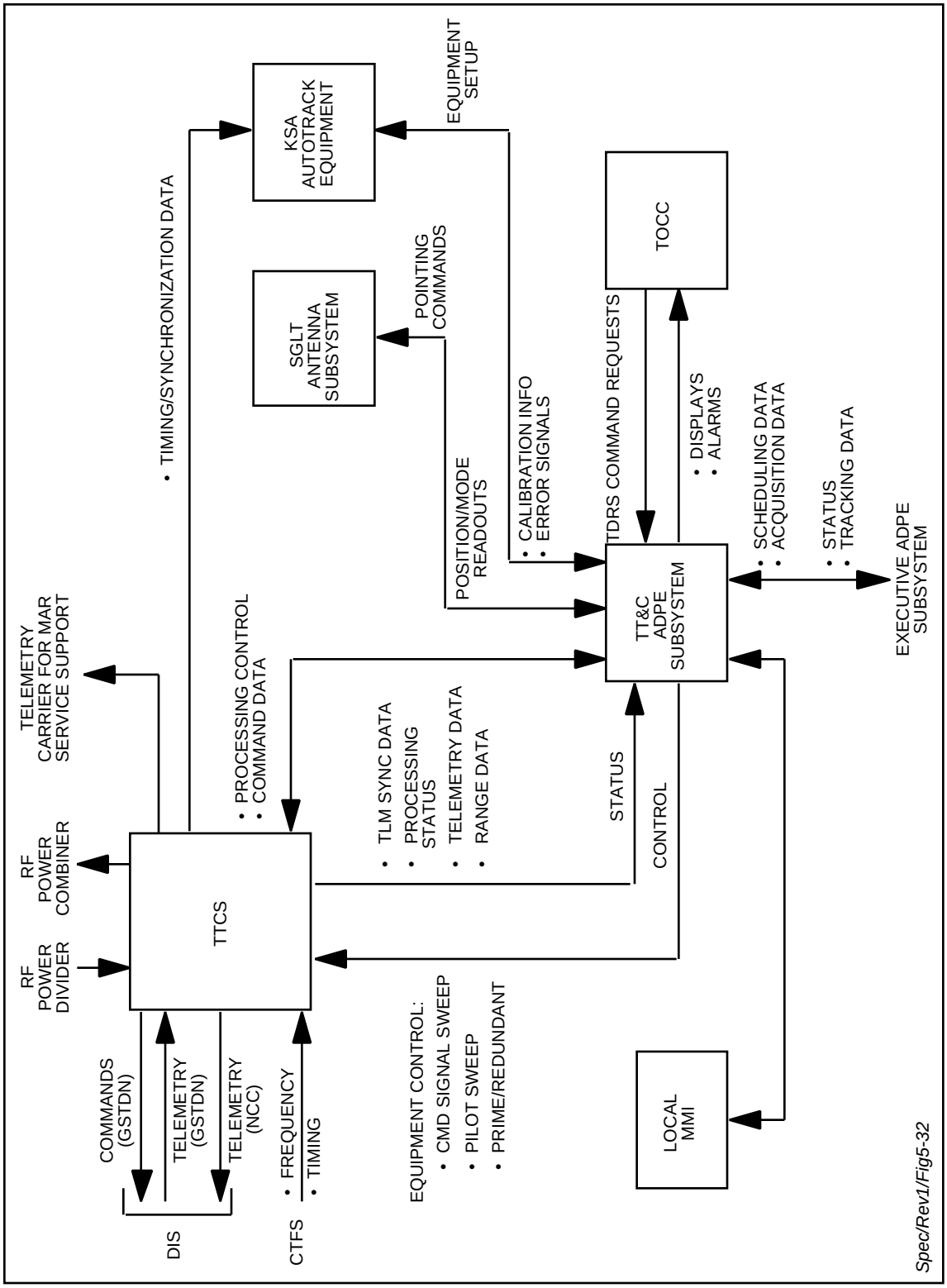

Figure 5-32. Interface/Flow Diagram -- K-Band TT&C Subsystem

5.4.5 Operations Requirements

The following operations requirements shall be supported by the TTCS. Additional TTCS operations requirements are associated with the TT&C ADPE Subsystem (Section 5.6.4).

a. During TDRS contingencies, maintain the health and welfare of the TDRS at S-band, and aid in re-establishing Ku-band TT&C (Danzante and GRGT only). No customer support is required during S-band TT&C support.

b. Panel switches on the TTCS Command Uplink equipment shall allow an operator to manually command the TDRS spacecraft as specified in Table 5-58.

c. The digital output of the KG command encryptor shall be manually reconfigurable via equipment front panel control for output to GSTDN via the DIS.

d. Input to the telemetry downlink equipment shall be manually reconfigurable via front panel control so that digital telemetry can be received via the DIS.

e. TDRS commanding and configuration control for customer service support shall be nominally accomplished without operator intervention by receiving the schedule information from the Executive ADPE Subsystem.

f. Panel switches on the TTCS equipment shall allow an operator to control the equipment as specified in Table 5-62.

g. Panel controls on the TTCS equipment shall permit an operator to select the configuration switch positions (Figure 5-29) to establish prime and redundant equipment chains in accordance with the architecture of Sections 5.4.1 and 5.6.4.1.

h. The Strip Chart Recorder equipment shall permit an operator to select up to sixteen TDRS telemetry parameters to be simultaneously recorded.

5.5 Performance Measuring and Monitoring Subsystem (PMMS)

5.5.1 Overview and Architecture

5.5.1.1 Capabilities

The Performance Measuring and Monitoring Subsystem (PMMS) shall provide the following capabilities:

a. Pre-service verification to ensure operational readiness of USS service chains prior to the start of the customer service support period.

b. Post-Maintenance operational validation testing to ensure operational readiness of USS service chains after maintenance.

c. RF signal monitoring (spectrum, frequency, and power) during customer service support periods.

d. SGLT transit delay measurements for range zero setting.

e. Return data delay measurements (Danzante and Cacique only).

f. USS service chain testing in the warm standby mode.

g. Provide an indication that the MA beam is formed correctly in conjunction with the USS ADPE Subsystem.

h. Inject both FDM and single element test signals at RF prior to element separation to assess the element separation function.

i. Inject appropriate IF signals prior to MA beamforming to assess the MA beamforming function.

j. Meet the requirements of Section 5.5 for cross support communications and tracking services.

k. Receive IF signals from the MAR Signal Processors after beamforming.

The PMMS shall provide the capability to verify up to four forward and up to four return SA customer service chains and an MA forward and return service chain simultaneously and independently.

5.5.1.2 Architecture

Figure 5-33 illustrates the PMMS reference architecture. The PMMS consists of input and output switches and two identical sets of PMMS Test Equipment (PTE). The PTEs shall generate and inject test signals into, and shall analyze test signals received from, USS service chains and the Antenna Subsystem (AS). The PTEs shall forward test results to the PMM ADPE Subsystem. RF spectra and Shuttle TV test patterns shall be forwarded to TOCC displays.

PMMS functional, performance, interface, and operations requirements are specified in Sections 5.5.2, 5.5.3, 5.5.4, and 5.5.5, respectively.

5.5.2 Functional Requirements

The forward and return PTEs shall perform the complementary signal processing functions provided by the forward and return USS service chains, respectively. The forward PTEs shall be capable of receiving individual, modulated Ku-band forward customer service signals and extracting forward customer baseband data. The return PTEs shall be capable of receiving return customer baseband data and generating individual, modulated Ku-band return customer service signals. In addition, the return PTEs shall be capable of generating carrier frequencies and PN code chip rates coherent with the forward customer service signals received by the forward PTEs.

A frequency translator shall downconvert the composite RF uplink signal to the dedicated and composite RF downlink frequencies to support SGLT transit delay measurements for range zero setting.

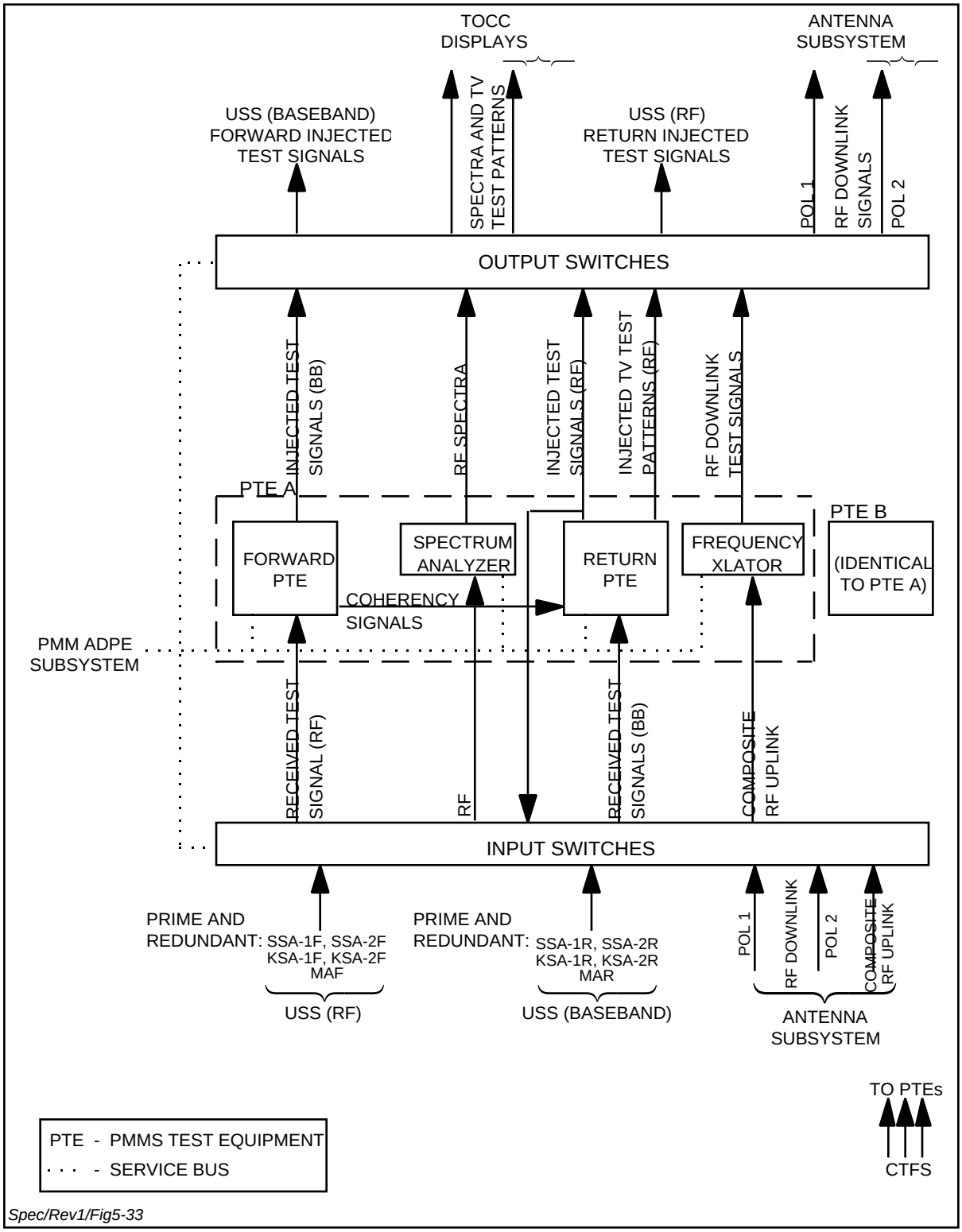

Figure 5-33. PMMS Reference Architecture

Equalization in the SSA and KSA return service chains for TDRS amplitude and phase distortions shall be bypassed as necessary to meet the functional requirements in this section and the performance requirements in Section 5.5.3.

Local PTE displays shall be provided to enable local monitoring of all video IF and analog signals distributed to TOCC remote displays and of all test results distributed to the ADPE Subsystems via the service buses.

5.5.2.1 Pre-Service Verification

The PMMS, in conjunction with the PMM ADPE Subsystem, shall automatically verify the operational readiness of the following USS service chains:

a. Forward Customer Service Chains.

b. Return Customer Service Chains.

c. Customer Tracking Service Equipment.

   1. Range.

   2. Doppler.

   3. Time Transfer.

The PMMS shall be configured by the PMM ADPE Subsystem, and shall provide the testing required to arrive at a Go/No-go decision for the scheduled USS service chains.

USS Service chains shall be verified at the service chain level.

5.5.2.1.1 Forward Service

5.5.2.1.1.1 Verification

The PMMS, in conjunction with the USS ADPE and PMM ADPE Subsystems, shall verify that the SAF service chains:

a. Are configured as scheduled, and can provide the required customer service performance.

b. Can provide the scheduled Doppler compensation to the carrier frequency and PN code chip rate.

c. Can employ the scheduled PN code.

5.5.2.1.1.2 Measurements

The PMMS shall measure the following parameters, as a minimum, and provide the measurements to the PMM ADPE Subsystem:

a. RF Output power.

b. Carrier frequency.

5.5.2.1.2 Return Service Chains

5.5.2.1.2.1 Verification

The PMMS, in conjunction with the USS ADPE and PMM ADPE Subsystems, shall verify that the SAR service chains:

a. Are configured as scheduled, and are capable of providing the required customer service performance at the scheduled data rate with the C/N_o ratio that provides a P_E of 10^{-5}.

b. Will operate as scheduled in the presence of customer spacecraft and TDRS dynamics, including the effects on frequency and PN code chip rate.

5.5.2.1.2.2 Measurements

The PMMS, in conjunction with the PMM ADPE Subsystem, shall measure the following items with the C/N_o ratio adjusted to provide a P_E of 10^{-5}:

a. Post-LNA C/N_o.

b. Acquisition time.

c. P_E.

d. KSAR autotrack equipment performance (TDRS SA antenna).

The PMMS, at each Danzante and Cacique, when scheduled for Shuttle TV verification, shall generate and inject TV test patterns and distribute TV test pattern results to TOCC displays.

The spectra of test signals generated by the return PTEs for injection into return USS service chains shall be monitored by the PMMS spectrum analyzer as requested via TOCC controls.

5.5.2.1.3 Tracking Equipment

The PMMS, in conjunction with the USS ADPE and PMM ADPE Subsystems, shall verify that the USS tracking equipment is configured as scheduled and is capable of providing the required customer service performance.

5.5.2.2 Post-Maintenance Operational Validation Testing

The functional requirements for post-maintenance operational validation testing shall be as specified in Section 5.5.2.1, except that validation testing shall be independent of customer support operations.

5.5.2.3 During-Service RF Signal Monitoring

The PMMS shall monitor and measure the following RF signals during customer service support periods:

a. Outputs from forward USS service chains.

b. Composite uplink (from AS).

c. Post-LNA downlinks (from AS).

d. Inputs to return USS service chains.

RF spectra signals shall be provided to the appropriate TOCC displays as specified in Section 9. The spectrum displays shall be configured as commanded by the TOCC.

The PMMS shall measure the RF output signal power and carrier frequencies of forward customer service chains as scheduled by the PMM ADPE Subsystem and shall provide these measurements to the PMM ADPE Subsystem.

5.5.2.4 SGLT Transit Delay Measurements

To support the determination of SGLT transit delay for range zero setting, the PMMS shall:

a. Frequency-translate the Ku-band forward service range channel to both composite and dedicated Ku-band return service downlink frequencies.

b. Extract and inject the above Ku-band signals as close as feasible to the SGLT antenna feed horns in the AS.

c. Measure the closed-loop path delay to support subsequent determination of the range zero set.

5.5.2.5 Return Data Delay Measurements (Danzante and Cacique Only)

To support the determination of return data delay, the PMMS shall measure the time delay from a point in the AS as close as feasible to the return feed horns to the point in the DIS where return data is time-tagged. Measurements shall be provided at return symbol rates ≤ 6 Msps (for NRZ, 3 Msps for biphase symbols) per I or Q Channel. Return data delay measurements are not required for shuttle services.

5.5.2.6 Warm-Standby Mode Testing

The PMMS shall support testing of USS service chains not supporting customer operations independent of, and without disrupting, customer support. Tests shall be scheduled by the PMM ADPE Subsystem in conjunction with the USS ADPE Subsystem.

5.5.2.7 Self-Testing and Calibration

The PMMS shall be capable of automatic self-testing and self-calibration as scheduled by the PMM ADPE Subsystem. BIT and BITE shall be incorporated, and BIT/BITE data shall be provided to the PMM ADPE Subsystem.

5.5.2.8 Failure Effects

Faults and failures in the PMMS shall not degrade customer service support, other than to limit the use of PMMS capabilities for customer support.

5.5.3 Performance Requirements

5.5.3.1 Pre-Service Verification

The PMMS shall:

a. Perform pre-service verification during the interservice period.

b. Detect at least 95% of the faults in the USS that would cause customer service degradation and outages.

c. Provide fault indication false alarms with a probability of .01 or less.

5.5.3.2 Post-Maintenance Operational Validation Testing

The PMMS shall:

a. Complete validation testing within five minutes.

b. Detect at least 95% of the faults in the USS that would cause customer service degradations and outages.

c. Provide fault indication false alarms with a probability of .01 or less.

5.5.3.3 During-Service RF Signal Monitoring

The PMMS shall measure and display RF powers and frequencies to an accuracy of ± 0.3 dB and ± 100 Hz, respectively.

5.5.3.4 SGLT Transit Delay Measurements

PMMS measurement accuracy of the SGLT transit delays shall meet the systematic range error requirement of Section 5.3.3.3.3b.

5.5.3.5 Return Data Delay Measurements (Danzante and Cacique only)

PMMS measurement of the return data delay shall be accurate to plus or minus one microsecond for data rates ≥ 250 kbps and plus or minus 25 percent of the data bit period for data rates < 250 kbps.

5.5.4 Interface Requirements

Table 5-64, supported by Figure 5-33, specifies PMMS external interfaces.

Table 5-64. External Interfaces-PMMS

FROM	TO	SIGNALS
PMMS	FORWARD USS SERVICE CHAINS	INJECTED TEST SIGNALS (BASEBAND)
FORWARD USS SERVICE CHAINS	PMMS	RECEIVED TEST SIGNALS (RF) AND MONITORED RF SIGNALS
PMMS	RETURN CUSTOMER SERVICE CHAINS	INJECTED TEST SIGNALS (RF)
RETURN USS SERVICE CHAINS	PMMS	RECEIVED TEST SIGNALS (BASEBAND)
PMMS	PMM ADPE SUBSYSTEM	TEST RESULTS, RF MEASUREMENTS, AND CONFIGURATION MONITORING
PMMS	TOCC	TV TEST PATTERNS AND RF SPECTRA
PMM ADPE SUBSYSTEM	PMMS	TEST SCHEDULES AND CONFIGURATION CONTROL
CTFS	PMMS	REFERENCE FREQUENCIES AND TIME STANDARDS
ANTENNA SUBSYSTEM	PMMS	RF DOWNLINK AND COMPOSITE RF UPLINK SIGNALS
PMMS	ANTENNA SUBSYSTEM	RF DOWNLINK TEST SIGNALS

5.5.5 Operations Requirements

The PMMS shall be capable of performing all functions under control of and as scheduled by the PMM ADPE Subsystem and the PMMS workstation in the TOCC. When there is a scheduling conflict over PMMS resource allocations, the priority of usage shall be established by the PMMS workstation operator in the TOCC.

The PN code used for pre-service verification of a forward customer service chains shall be either that of the next scheduled customer, or a special PMMS test code.

5.6 Control and Display Computer Network (CDCN)

5.6.1 Overview and Architecture

a. General. Each SGLT shall contain an identical and independent CDCN. The SGLT CDCN shall include primary (P) and redundant (R) Automatic Data Processing Equipment (ADPE) Subsystems for USS service equipment chains (SSA1, SSA2, KSA1, KSA2 and MA), for the TT&C Subsystem, for the PMM Subsystem, and for the Executive Control Component. Figure 5-34 provides a reference distributed processor

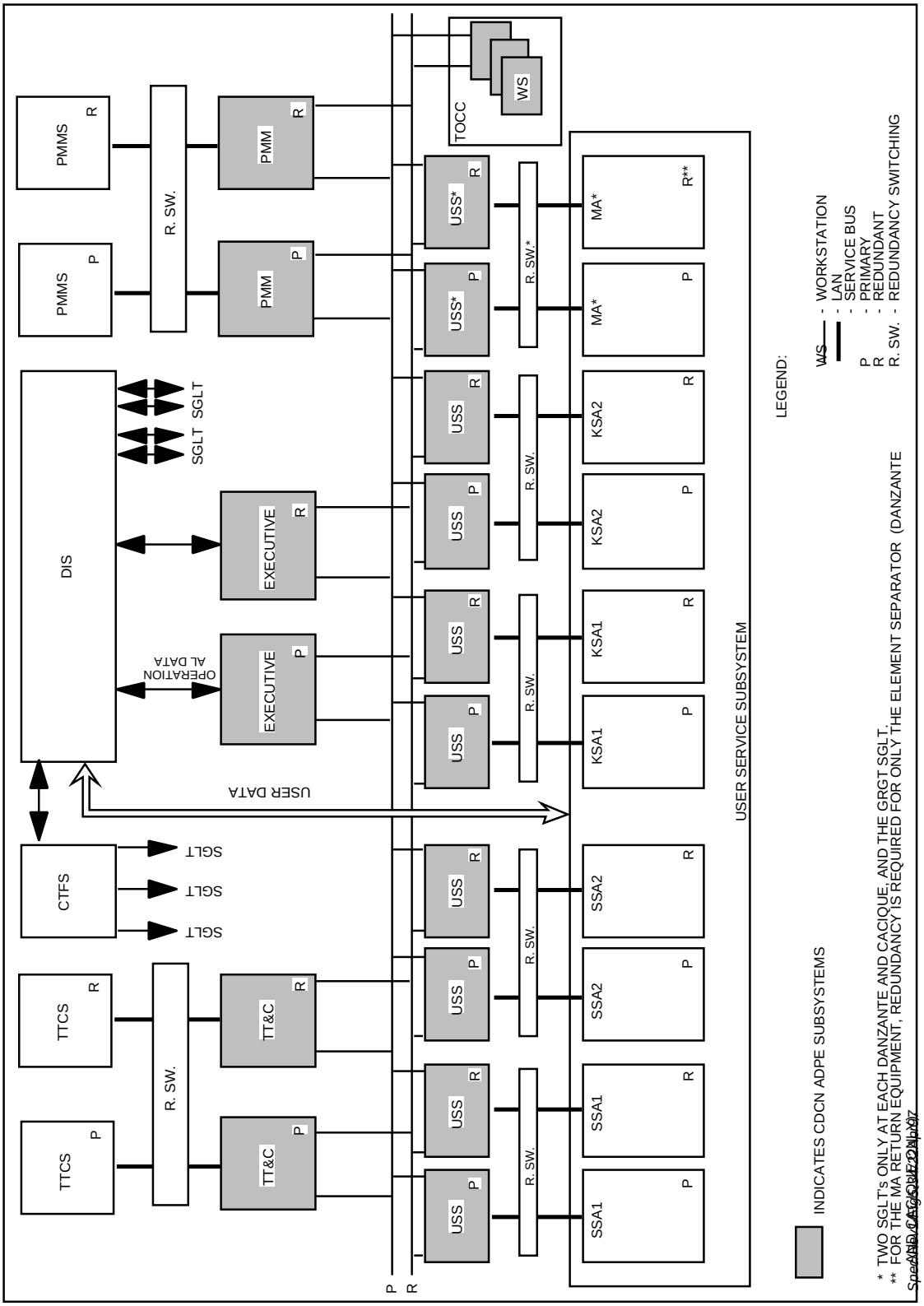

Figure 5-34. SGLT CDCN Reference Architecture

architecture for the SGLT CDCN. Each ADPE Subsystem shall interface to the primary and redundant CDCN LAN's. Each prime and redundant ADPE shall be identical and physically interchangeable. The CDCN shall be implemented with ADPE for which vendor support of hardware and software maintenance is available. The CDCN shall include, but not be limited to, the following:

1. Computers.
2. Computer peripherals.
3. Dual Local Area Networks (LAN).
4. Service buses.
5. Interface devices.
6. Intelligent terminals for TOCC workstations.
7. Intelligent terminals for local control of the ADPE Subsystem (Local MMI).

The Local MMI shall provide the identical display capability as the TOCC workstation.

b. Margin. ADPE, Local MMI and TOCC workstation performance metrics for all WSC subsystems (including the DIS and STTC) shall be obtained and evaluated on a periodic basis (in the CDCN for operations and in the SMTF against benchmark test scenarios). These metrics shall include, but are not limited to:

1. Computer memory usage/availability.
2. Disk storage usage/availability.
3. Central processing Unit (CPU) processing performance.
4. I/O device transfer rates.
5. LAN throughput rate.

Each disk drive shall have a minimum unformatted capacity of one gigabyte. Expansion of memory shall not adversely affect CPU performance and shall provide the same access as provided by the original memory. CDCN subsystem components shall be expandable.

c. Selection Factors. In selecting ADPE subsystems comprising the CDCN architecture the following factors shall be considered:

1. Maximize the utilization of equipment for software development and maintenance. Programmers shall not be constrained in software development/maintenance because of uniqueness of computers, peripherals, operating systems, languages or software development tools.
2. Minimize the unique training and skills required for maintenance.

3. Minimize the number of different vendors providing computers and peripherals.

4. Allow for performance expansion by selecting computers and peripherals which are not the highest performance models.

5.6.1.1 Functions

The functional requirements of the CDCN ADPE subsystems are detailed in subsequent subsections of Section 5.6. The functions of the CDCN are allocated to the ADPE subsystems in the CDCN reference configuration of Figure 5-34 as follows:

a. Executive ADPE Subsystem

   1. Interface with the DIS.

   2. Perform CDCN database management.

   3. Support display in the TOCC of CDCN health status, system activity, error messages and database parameters.

   4. Monitor failover to redundant ADPE and SGLT subsystems.

   5. Distribute customer service initiation and control data to USS, TT&C, and PMM ADPE Subsystems.

   6. Control CDCN initialization, restart, reinitialization and termination.

b. USS ADPE Subsystem

   1. Initiate, configure and control USS service equipment.

   2. Propagate customer state vectors, interpolate customer and TDRS state vectors, and compute Doppler frequencies for forward and return link equipment control.

   3. Provide equipment status and equipment performance data to the PMM ADPE Subsystem.

   4. Provide customer tracking and customer performance data to the Executive ADPE Subsystem.

   5. Provide communications between the USS MA ADPE and the USS SSA ADPE for cross support communications and tracking services.

c. TT&C ADPE Subsystem

   1. Provide all command and telemetry processing for one TDRS.

   2. Acquire TDRS tracking data and perform TDRS orbit determination.

   3. Propagate and interpolate customer and TDRS state vectors, and compute TDRS antenna pointing data.

   4. Perform all computations required for the operation, health and safety of the TDRS.

d. PMM ADPE Subsystem

1. Collect, analyze, display and distribute customer service chain status and performance data.

2. Support pre-service verification, post-maintenance operational validation, and during-service RF signal monitoring.

3. Provide fault isolation assistance to operators.

5.6.1.1.1 Logging/Archiving/Delogging

The CDCN ADPE Subsystems shall provide logging, archiving and delogging of equipment status, service performance data, operations messages, and TOCC and Local MMI commands. The CDCN ADPE Subsystems shall receive status and performance data as specified for their associated Subsystem. Danzante and Cacique shall have the capability for offline delogging of archived data from any ground terminal.

5.6.1.1.1.1 CDCN ADPE Subsystem Logging Performance

The CDCN ADPE Subsystems shall receive status and/or performance data from associated Subsystems and equipment as specified in the logging performance requirements for each ADPE Subsystem. Each ADPE subsystem shall provide sufficient storage media to log the specified data for a period of 5 hours. All logged data shall be time tagged. The CDCN ADPE Subsystems shall receive operations messages and TOCC or Local MMI initialization, reinitialization, termination, restart and configuration commands. The ADPE Subsystems shall maintain a tamper proof log of these messages and commands. The logging requirements for status and performance data, operations messages, and TOCC and Local MMI commands shall be as follows:

a. Status Data. The ADPE Subsystems shall monitor associated subsystem equipment status. The ADPE Subsystems shall alert the Executive ADPE Subsystem, the TOCC workstation, and the Local MMI of failure to receive status data as required. Upon receiving status data, the ADPE Subsystem shall compare the received status data to the previously received status data to determine if the status level has changed. The ADPE Subsystem shall identify status changes that require immediate alerts, and shall alert the Executive ADPE Subsystem, the TOCC workstation, and the Local MMI if these changes occur. The ADPE Subsystem shall provide for operator modification of status change alerts. All status data shall be time-tagged and logged.

b. Performance Data. The ADPE Subsystem shall monitor the performance data input from the monitoring equipment to assure reception as scheduled. The ADPE Subsystem shall alert the Executive ADPE Subsystem, the TOCC workstation, and the Local MMI of failure to receive performance data as required. Upon receiving performance data, the ADPE Subsystem shall compare the received data to the previously received performance data to determine if the performance has changed. The ADPE Subsystem shall compare the received performance data with threshold levels to determine if immediate alerts are required, and shall alert the Executive ADPE Subsystem, the TOCC workstation, and the Local MMI upon threshold violations. The ADPE

Subsystem shall provide for operator modifications of the threshold levels requiring alerts. The ADPE Subsystem shall time-tag and log all performance data received from the monitoring equipment.

c. Operations Messages. The CDCN ADPE Subsystem shall time-tag and log all received operations messages. The CDCN ADPE Subsystem shall also time-tag and log all transmitted operations data.

d. TOCC and Local MMI Commands. The CDCN ADPE Subsystem shall time-tag and log all TOCC and Local MMI operator alerts and actions including commands for initialization, reinitialization, termination, restart, failover, reconfiguration, or modification of status/performance data alert thresholds.

5.6.1.1.1.2 CDCN ADPE Subsystem Archiving Performance

The ADPE Subsystem shall periodically archive all logs, including equipment performance and status, operations messages, and TOCC and Local MMI commands. Archived data shall be available for later analysis. The ADPE Subsystem shall provide sufficient storage media to archive a minimum of twenty-four (24) hours of logged data on a single storage unit (i.e., one tape).

5.6.1.1.1.3 ADPE Subsystem Delogging

The ADPE Subsystem shall provide processing and analysis of all logged data, upon operator request. The data logs shall be processed, analyzed, and capable of generating hard copy output or TOCC displays upon TOCC or Local MMI operator request. The processing shall include but not be limited to trend and stability analysis. All displays and hard copy outputs shall include time tags. Delogging shall include the capability of displaying and generating hard copy outputs of only data value changes.

5.6.1.1.1.4 Format

All CDCN ADPE subsystems shall use the same format for the log and archive function.

5.6.1.1.1.5 Log Availability

It is not required to have the capability to perform the archive or delogging function on a log while the log is in active use.

5.6.1.2 Interfaces

The CDCN functional interfaces with other SGLT subsystems are shown in Figure 5-35.

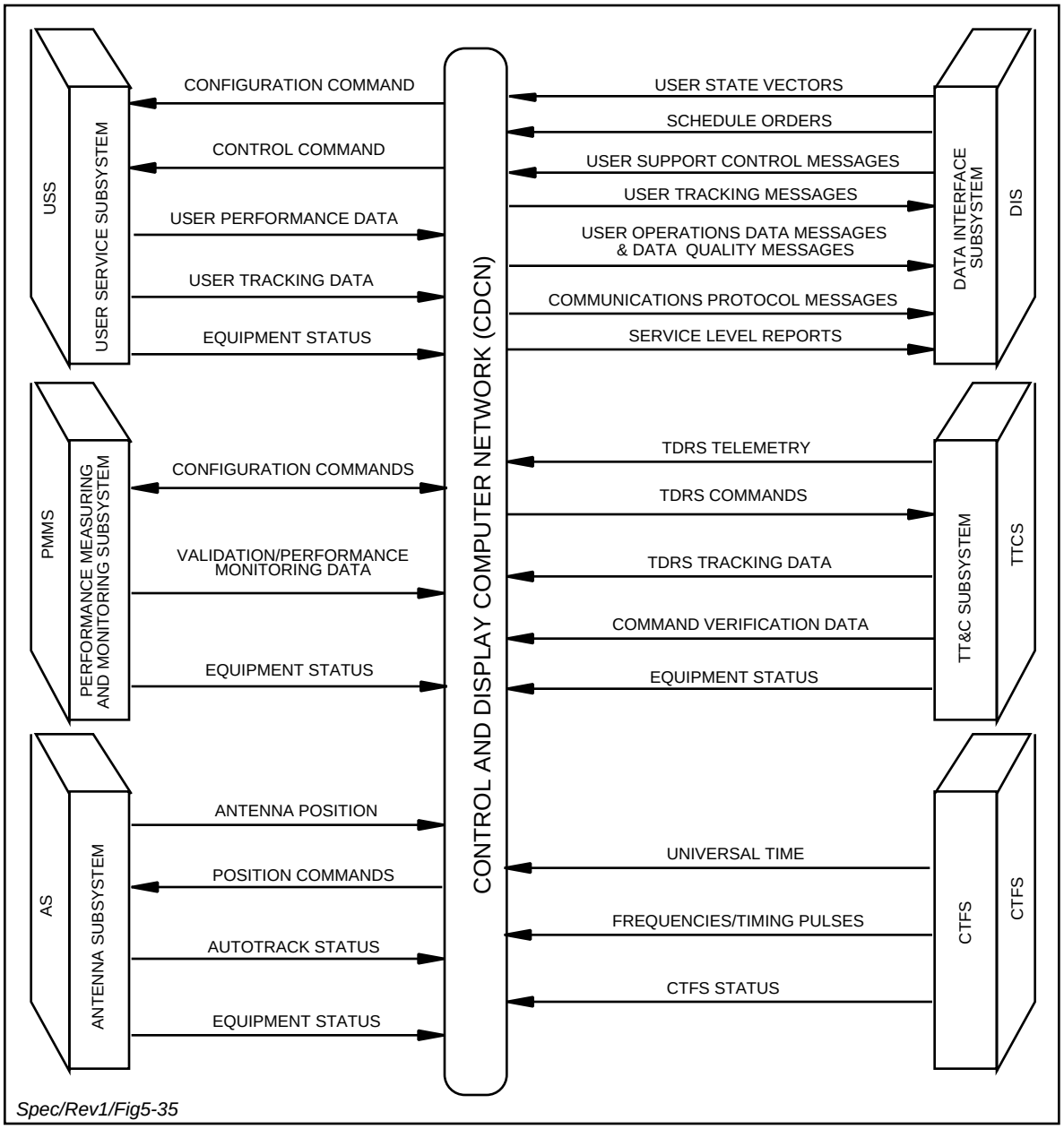

Figure 5-35. CDCN Functional Interfaces

5.6.1.2.1 LAN Interface

The interface between the ADPE Subsystems comprising the CDCN shall be a dual LAN. The requirements for the LAN are:

a. Single point failures within a LAN shall not cause the LAN to be inoperable.

b. LAN interfaces shall not be affected as a result of relocation, addition, or deletion of ADPEs or workstations.

c. LAN data transmission shall continue on a uninterrupted basis during the repair or replacement of workstations and ADPE subsystems that interface with the LAN.

d. LAN error detection/error correction capability shall be provided.

e. Diagnostic and status capabilities shall be provided for the LAN.

f. LAN error status shall be provided to the Executive ADPE Subsystem.

g. The LAN shall comply with the Institute of Electrical and Electronic Engineers (IEEE) 802, Local Area Network Standard.

h. Communications within the LAN shall comply with the International Standards Organizations (ISO) Open System Interconnection (OSI) Reference Model as described in ISO 7498-1984.

i. The LAN shall allow addition or replacement of ADPEs and workstations from multiple equipment manufacturers.

j. The LAN shall provide the capability to change the access priority of nodes if priority access methods are employed.

k. The LAN shall provide the capability to be connected to other compatible LANs.

5.6.1.2.2 Service Buses

The interface between the USS and PMM subsystems and their respective ADPE Subsystems shall be a service bus. The service bus shall provide for set up and control of the equipment by the ADPE and for status and performance data from the equipment to the ADPE Subsystem. The service buses shall be in compliance with MIL-STD-1553B or IEEE-488.

5.6.1.3 Performance Requirements

The CDCN shall perform SGLT equipment configuration, control and monitoring, TDRS command and control and provide operator interfaces to the SGLT.

5.6.1.3.1 Availability

The CDCN shall be designed to preclude outages due to single point failures and to provide an availability consistent with the required SGLT availability. CDCN availability shall be determined and demonstrated in accordance with Section 13 of this specification.

5.6.1.3.2 Independent Operation

The CDCN shall include primary and redundant ADPE subsystems as shown in the reference CDCN configuration of Figure 5-34. The primary CDCN configuration shall consist of one each Executive, TT&C, PMM, SSA1, SSA2, KSA1, KSA2, and MA ADPE subsystems, one of the dual LANs and at least 3 TOCC workstations. The redundant CDCN configuration shall consist of the remaining ADPE subsystems, the half of the LAN which is not in the primary configuration and the remaining TOCC workstations. Independent operation of the primary and redundant configurations shall be provided. The ADPE subsystems comprising the primary and

redundant configurations shall be operator-selectable, e.g., the capability of configuring either of the Executive ADPE Subsystems, either of the TT&C ADPE Subsystems, either of the PMM ADPE subsystems, any workstations and either of the USS ADPE subsystems from each USS service chain as the prime or redundant configurations shall be operator controllable. The capability for independent operation of the primary and redundant configurations shall provide for two modes of operations of the redundant configuration; the Hot-Standby Mode (HSM) and the Maintenance/Software Delivery Mode (MSM). Any combination of the ADPE subsystems and workstations in the redundant configuration shall be capable of independent operation in either the HSM or MSM under operator selection, i.e., each ADPE subsystem and workstation in the redundant configuration shall be independently configurable and operable in the HSM or MSM by operator selection.

5.6.1.3.2.1 Hot-Standby Mode

The HSM shall provide for rapid failover to redundant ADPE subsystems and workstations configured as hot-standby for customer service support. In the HSM, the detection of failures or anomalies and subsequent automatic failover of a hot-standby ADPE subsystem or workstation into the primary configuration shall be accomplished such that all functions of the primary configuration are restored within 10 seconds, and the maximum interruption of customer services attributable to failover action is less than 10 seconds. The capability of failover of a selected hot-standby ADPE subsystem of workstation or a selected group of hot-standby ADPE subsystems and workstations into the primary configuration under operator control shall be provided. This operator controlled failover shall be accomplished within 10 seconds of operator action.

5.6.1.3.2.2 Maintenance/Software Delivery Mode

The MSM shall provide for performing maintenance functions and delivering new software on the redundant configuration concurrent with customer support on the primary configuration. Reconfiguration of any ADPE subsystem or workstation from MSM to the HSM, from HSM to MSM or between primary and redundant operation shall be accomplished within 30 seconds under operator control. Failover to ADPE in the MSM shall not be permitted.

5.6.1.3.3 ADPE Time of Day Synchronization

All ADPE in the CDCN, the S-band TT&C ADPE, and the DIS ADPE shall receive data from the CTFS and synchronize their TOD clocks to within 20 milliseconds or better of Greenwich Mean Time (GMT).

5.6.2 Executive ADPE

The Executive ADPE Subsystem shall consist of primary and redundant ADPEs, each interfacing with both the primary and redundant LAN, and each interfacing with the DIS.

5.6.2.1 Overview

The Executive ADPE Subsystem shall interface with the DIS for the exchange of messages with NCC. The Executive ADPE Subsystem shall provide monitoring and control of the other CDCN

ADPE subsystems. The Executive ADPE Subsystem shall support SGLT control exercised at the TOCC workstations. The Executive ADPE Subsystem shall include a Local MMI to support operator control. The Executive ADPE Subsystem shall provide customer service scheduling support, DIS interface support and NCC backup support.

5.6.2.2 Functions

The Executive ADPE shall perform the following functions:

a. CDCN Control and Monitoring.

b. DIS Interface Support.

c. Message Processing.

d. Customer Service Scheduling.

e. Database Management.

f. NCC Backup Support.

5.6.2.2.1 CDCN Control and Monitoring

The Executive ADPE Subsystem, in conjunction with the TOCC, shall perform CDCN control and monitoring functions. The Executive ADPE Subsystem CDCN control and monitoring functions shall include:

a. Initialization.

b. Reinitialization.

c. Termination.

d. Restart.

e. Failover.

f. Monitoring.

g. Control.

5.6.2.2.1.1 Initialization

The Executive ADPE Subsystem shall control and monitor CDCN initialization. The Executive ADPE Subsystem shall be capable of initializing itself under control of the Local MMI. Initialization shall include the loading of all operating systems (OS), applications software (APS), utilities and databases of all CDCN ADPE Subsystems including the TOCC workstations.

The Executive ADPE Subsystem shall command and control the initialization of the USS, TT&C, PMM ADPE Subsystems and the TOCC workstations. The Executive ADPE Subsystem shall process initialization responses from other ADPE Subsystems to update CDCN equipment status databases. After synchronization of the time of day (TOD) clock, the Executive ADPE Subsystem shall log the initialization status of the CDCN and display the initialization status at

TOCC workstations and Local MMIs. The Executive ADPE Subsystem shall establish the checkpoint and configuration database for subsequent reinitialization, restart and failover. After initialization the Executive ADPE Subsystem shall await TOCC or Local MMI command before starting operation.

5.6.2.2.1.2 Reinitialization

The Executive ADPE Subsystem shall provide reinitialization of the Executive ADPE Subsystem and shall provide reinitialization support of other operator designated ADPE subsystems. The Executive ADPE Subsystem shall be capable of reinitializing itself under control of the TOCC or its Local MMI. Reinitialization of the Executive ADPE Subsystem shall provide for reloading the Executive ADPE Subsystem with OS, APS, utilities and databases, without interfering with continuation of ongoing performance of other ADPE subsystems; e.g., without requiring reinitialization of the USS, TT&C, PMM ADPE subsystems and TOCC workstations. Communications between the Executive ADPE Subsystem and other ADPE Subsystems and change of configuration or service requiring Executive ADPE action will be delayed until reinitialization is completed. After reinitialization, the Executive ADPE Subsystem shall update the configuration and status databases by using the checkpoint databases. Checkpointing frequencies shall be consistent with the R/M/A requirements of Section 13. The Executive ADPE Subsystem shall synchronize the TOD clock with inputs from the CTFS, update the checkpoint status and configuration database for subsequent reinitialization or restart, log the reinitialization, and display the reinitialization at TOCC workstations and Local MMI. After reinitialization the Executive ADPE Subsystem shall await TOCC or Local MMI command before starting operation.

The Executive ADPE Subsystem shall support the reinitialization of other selected ADPE subsystem(s) under control of TOCC or the Executive ADPE Subsystem MMI. Reinitialization of the selected ADPE subsystem shall provide for reloading the OS, APS, utilities and databases of the selected ADPE subsystem(s) without interfering with continuation of ongoing functions of other ADPE subsystems. The Executive ADPE Subsystem shall process responses from other ADPE subsystems to update CDCN equipment databases. The Executive ADPE Subsystem shall use the latest checkpoint databases to configure the CDCN Subsystem. The Executive ADPE Subsystem shall update the checkpoint status and configuration database for subsequent reinitialization or restart, log the reinitialization and display the reinitialization at TOCC workstations and Local MMI. Reinitialization of the CDCN shall require less than 30 minutes.

5.6.2.2.1.3 Termination

The Executive ADPE Subsystem shall provide orderly termination of all CDCN ADPE operations. The Executive ADPE Subsystem shall control the termination of operations and any designated ADPE Subsystem.

CDCN termination shall be initiated by the TOCC. After termination, a restarted ADPE subsystem shall be capable of resuming operations without reloading OS or utilities into memory.

The Executive ADPE Subsystem shall:

a. Monitor and display ADPE subsystem termination status.

b. Alert the ADPE configuration control unit if the Executive ADPE Subsystem does not receive responses from other subsystems indicating compliance with the termination command (e.g., sign-off).

c. Log termination status.

5.6.2.2.1.4 Restart

The Executive ADPE Subsystem shall be capable of restarting CDCN ADPE Subsystem operations after termination without reloading the OS or utilities into memory. Restart shall occur after a command from the TOCC or Local MMI operator. The Executive ADPE Subsystem shall be capable of receiving CDCN configuration commands (configuring in the HSM or MSM) from the TOCC. The Executive ADPE Subsystem shall log the restart command and all CDCN configuration commands. The restart status shall be displayed at the TOCC and Local MMI.

5.6.2.2.1.5 Failover

The prime Executive ADPE Subsystem shall failover to the redundant Executive ADPE Subsystem only if the redundant Executive ADPE Subsystem is in HSM. An alarm shall be displayed at the TOCC and Local MMI whenever the prime Executive ADPE Subsystem fails and the redundant Executive ADPE Subsystem is not in HSM. For manual failover control, the prime Executive ADPE Subsystem shall accept commands from the TOCC workstation or Local MMI to perform CDCN ADPE Subsystem failover.

The Executive ADPE Subsystem shall log the failover command(s) and status. The Executive ADPE Subsystem shall notify the TOCC, the Local MMI and the PMM ADPE Subsystem that failover has occurred.

The Executive ADPE shall monitor all failover actions in the SGLT and provide the TOCC operator with SGLT and CDCN configuration and status.

5.6.2.2.1.6 Monitoring Functions

The Executive ADPE Subsystem shall perform the CDCN ADPE Subsystem monitoring functions. The monitoring functions shall include, but need not be limited to:

a. Receiving configuration, status and performance data from the USS, TT&C, PMMS, DIS, and the TOCC.

b. Logging all received status, performance and configuration data.

c. Alerting TOCC, Local MMI, and PMM ADPE Subsystem of invalid or abnormal conditions and configuration changes.

5.6.2.2.1.7 Control Functions

The Executive ADPE Subsystem shall receive the CDCN ADPE Subsystems configuration control commands from the TOCC or Local MMI. The Executive ADPE Subsystem shall configure the CDCN in accordance with those commands. The Executive ADPE Subsystem shall notify the TOCC and Local MMI after completion of the configuration and shall update the configuration database. Configuration control commands shall include but not be limited to the commands for configuring the CDCN and ADPE subsystems in the prime, HSM and MSM modes.

5.6.2.2.1.8 Logging/Archiving/Delogging

Logging, Archiving and Delogging requirements shall be specified in Section 5.6.1.1.1 and shall include the following:

a. Log all monitoring and control functions it receives and generates as specified in Section 5.6.1.1.1.

b. Log all incoming DIS messages and outgoing messages to the DIS.

c. Log all TOCC and Local MMI alerts and actions.

d. Log system status at 5 second intervals.

e. Provide sufficient storage media to log the specified data for a period of five hours.

5.6.2.2.2 DIS Interface Support

The Executive ADPE Subsystem shall receive, transmit, and process messages from and to the NCC, FDF, and JSC via the DIS. Only the prime Executive ADPE Subsystem shall provide interactive DIS interface support.

a. Incoming messages shall include:

    1. SHOs.

    2. OPMs.

b. Outgoing messages shall include:

    1. OPMs.

    2. Service level status reports (SLRs).

    3. ODMs.

    4. Tracking data messages (TDMs).

The content, format, communication protocol and procedural rules for the interchange of these messages between the WSC and the NCC are specified in 530-ICD-NCC-FDF/WSC.

5.6.2.2.2.1 Initial Message Processing

The Executive ADPE Subsystem shall:

a. Compare the TDRS ID in SHOs and incoming OPMs with the ID of the TDRS in the Executive ADPE database (i.e., the ID of the TDRS assigned to the SGLT). Only those SHOs whose IDs compare shall be accepted. Only those OPMs whose IDs compare shall be accepted, except OPM classes 01, 10, 15, 16, and 18, all of which shall be accepted.

b. Log all incoming and outgoing messages.

c. Provide syntax, checksum and reasonableness checks as required in 530-ICD-NCC-FDF/WSC.

d. Provide message formatting for outgoing messages as specified in 530-ICD-NCC-FDF/WSC.

5.6.2.2.3 Message Processing

The Executive ADPE Subsystem shall process incoming messages and provide the processed data to the ADPE Subsystems as required for customer service support. The Executive ADPE Subsystem (prime ADPE only) shall format and transmit outgoing OPMs, SLRs, ODMs, and TDMs in compliance with 530-ICD-NCC-FDF/WSC.

5.6.2.2.3.1 Incoming Message Data

The Executive ADPE Subsystem shall provide:

a. Scheduling and equipment configuration data and customer and TDRS spacecraft state vectors to the USS ADPE Subsystems (SSA1, SSA2, KSA1, KSA2, and MA) as required to provide customer services.

b. Scheduling and TDRS configuration data and customer and TDRS spacecraft state vectors to the TT&C ADPE Subsystems as required to provide customer services.

c. All data in Items a. and b. above to the PMM ADPE Subsystems.

d. OPM data to the ADPE Subsystems as required to provide customer services (OPMs are defined in 530-ICD-NCC-FDF/WSC).

5.6.2.2.3.2 Output Message Formatting and Transmitting

The Executive ADPE Subsystem shall integrate data from the ADPE subsystems to form OPMs, ODMs, and SLRs for transmission to NCC, and to form TDMs (customer spacecraft and TDRS) for transmission to FDF, JSC and the Local Interface (LI). The Executive ADPE Subsystem shall format these messages in accordance with 530-ICD-NCC-FDF/WSC and transmit them to the DIS.

5.6.2.2.4 Customer Service Scheduling

The Executive ADPE Subsystem shall receive and process SHOs and OPMs to determine their acceptability for implementation. Acceptance shall be based on syntax checking, checksum errors, service conflict analyses and SGLT equipment availability. Service conflict analysis for multiple access return (MAR) service shall be based on an automated scheduling algorithm in which n simultaneous services are provided whenever $n \leq m$ where m is the number of available MAR channels. This algorithm shall not require operator interaction or NCC intervention. Affected SHOs shall be reported in SLRs only when $n > m$. Automated failover to available channels shall be provided. The algorithm for determining affected SHOs when $n > m$ shall be specified by the contractor. Accept/Reject criteria, procedures and messages are defined in 530-ICD-NCC-FDF/WSC and Appendix A.

Accept/reject messages shall be sent to the DIS ADPE Subsystem. The DIS shall record the acceptance/rejection determinations of the Executive ADPE Subsystems, and shall then send the messages to the NCC.

The Executive ADPE Subsystem shall download to the relevant ADPE Subsystems of the CDCN all SHO and OPM data (from accepted SHOs and OPMs) required to support customer services.

5.6.2.2.5 Database Management

The Executive ADPE Subsystem shall perform database management for the CDCN. The functions provided shall include, but not be limited to:

a. Maintain a CDCN status and configuration database, an SGLT equipment status database and ADPE Subsystem databases. Perform processing to prepare these databases for:

   1. CDCN initialization.

   2. CDCN operational configuration (e.g., HSM or MSM).

   3. Failover.

   4. Customer service initialization and operation.

b. Download ADPE Subsystem databases to accomplish CDCN initialization and configuration, failover and customer service initialization and operation.

c. Transmit and receive database updates during operational support.

d. Maintain master databases for the CDCN.

e. Maintain and download message routing information consistent with the current CDCN configuration.

f. Maintain a master message logging activity record for the CDCN.

g. Maintain ADPE Subsystem software module definition and linkage data and perform module retrieval and configuration in support of software updates/deliveries.

h. Maintain a customer and TDRS State Vector database in accordance with the requirement of Appendix A. Provide visibility into the customer and TDRS state vector database from TOCC.

5.6.2.2.6 NCC Backup Support

The Executive ADPE Subsystem shall provide NCC backup support for SGLT operations during NCC outages. The Executive ADPE Subsystem shall receive SHO and OPM inputs from the TOCC or from the Local MMI. The Executive ADPE Subsystem shall process SHO and OPM inputs and shall provide the necessary data to other CDCN ADPE Subsystems to implement requested services. Formats shall be presented to the operators for entry of SHO and OPM input data at the TOCC and Local MMIs.

5.6.2.2.7 Provide Local Control Mode Support

During local control mode the functions listed in paragraph 4.5.2.c shall be supported.

a. Following customer and TDRS support functions shall be provided:

    1. Allocation of the TDRS, Spare 19 meter antenna (Danzante and Cacique only), EET antenna, and SGLT service chains.

    2. SGLT Frequency mode switchover between S-band and Ku-band frequencies.

    3. Initiation and termination of TDRS telemetry collection.

    4. Initiation and termination of command processing.

    5. Configuration of equipment to use a GSTDN station antenna.

    6. Reservation of equipment for maintenance and testing.

    7. Cancellation of a customer or TDRS support service.

b. Initiation of the operations messages listed below shall be supported:

    1. OPM 02 - Reacquisition.

    2. OPM 03 - Reconfiguration (except for cross support services and DQM, max/min EIRP, and G2 Inversion parameters).

    3. OPM 04 - Forward Link Sweep.

    4. OPM 12 - Cancel SHO.

5.6.2.3 Interfaces

The Executive ADPE Subsystem interfaces with other subsystem ADPEs via the redundant CDCN LANs. The Executive ADPE Subsystem interfaces with the DIS ADPE Subsystem via a dual LAN for the transmission of ODMs, OPMs and SLRs, and for the receipt of SHOs and OPMs.

For the transmission of customer TDMs, each Executive ADPE (primary and redundant) has two interfaces (GSFC and JSC) with the Black Data Switch via the TDM Block Concentrator (TBC) and the Tracking Data Formatter (TDF) and one direct interface with the Local Interface (LI)

Panel. The Executive ADPE Subsystem functional interface with the DIS is defined in 530-ICD-NCC-FDF/WSC. Each prime/redundant pair of Executive ADPE Subsystems shall have a Local MMI including a video display unit (VDU) and keyboard, to provide local control capabilities.

5.6.3 User Service Subsystem (USS) ADPE Subsystem Requirements

5.6.3.1 Overview and Architecture

The CDCN shall include two identical dedicated ADPE subsystems (prime and redundant) to support each of the USS service chains listed below:

1. SSA1 (SSA-1F and SSA-1R service chains).
2. SSA2 (SSA-2F and SSA-2R service chains).
3. KSA1 (KSA-1F and KSA-1R service chains).
4. KSA2 (KSA-2F and KSA-2R service chains).
5. MA (MAF and MAR service equipment).

Figures 5-36 and 5-37 show a reference architecture for the USS SA and MA ADPE Subsystems, respectively. The figure defines the functional relationship between one set of prime and redundant ADPE Subsystems and its associated forward and return service chains. Each prime/redundant pair of ADPE Subsystems shall have a dedicated Local MMI.

5.6.3.2 Functional Requirements

The USS ADPE Subsystem functions shall include, but not be limited to:

a. Accept schedule, state vector, and customer support control data.

b. Perform ephemeris and related computations.

c. Configure and control USS equipment.

d. Provide pre-service testing support to the PMMS.

e. Provide service and test initiation support.

f. Provide during-service support.

g. Provide service termination support.

h. Provide equipment status and service performance data during operations, testing and maintenance.

i. Provide local control capability.

j. Provide TOCC workstation support.

k. Perform logging, archiving, and delogging.

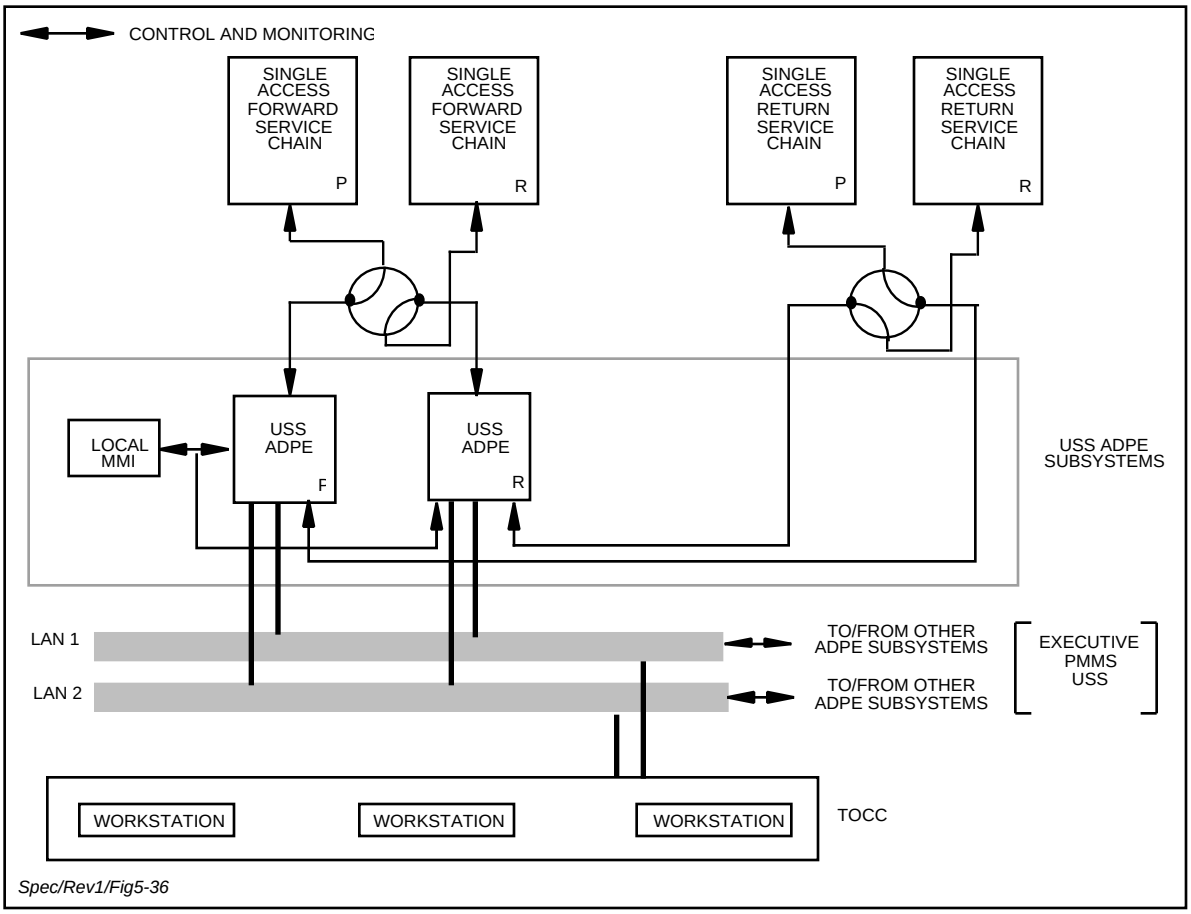

Figure 5-36. USS SA ADPE Subsystem Reference Architecture

5.6.3.2.1 Accept Schedules, State Vectors and Customer Support Control Data

The USS ADPE Subsystem shall receive as the minimum the following:

a. Schedule Order (SHO) and Operations Message (OPM) data from the Executive ADPE Subsystem. These data are defined in 530-ICD-NCC-FDF/WSC.

b. Pre-service test schedule and maintenance test schedule data.

c. Operator-initiated schedule and operations data from the TOCC.

d. Operator-initiated operations data from the Local MMI (see paragraph 5.6.3.2.9).

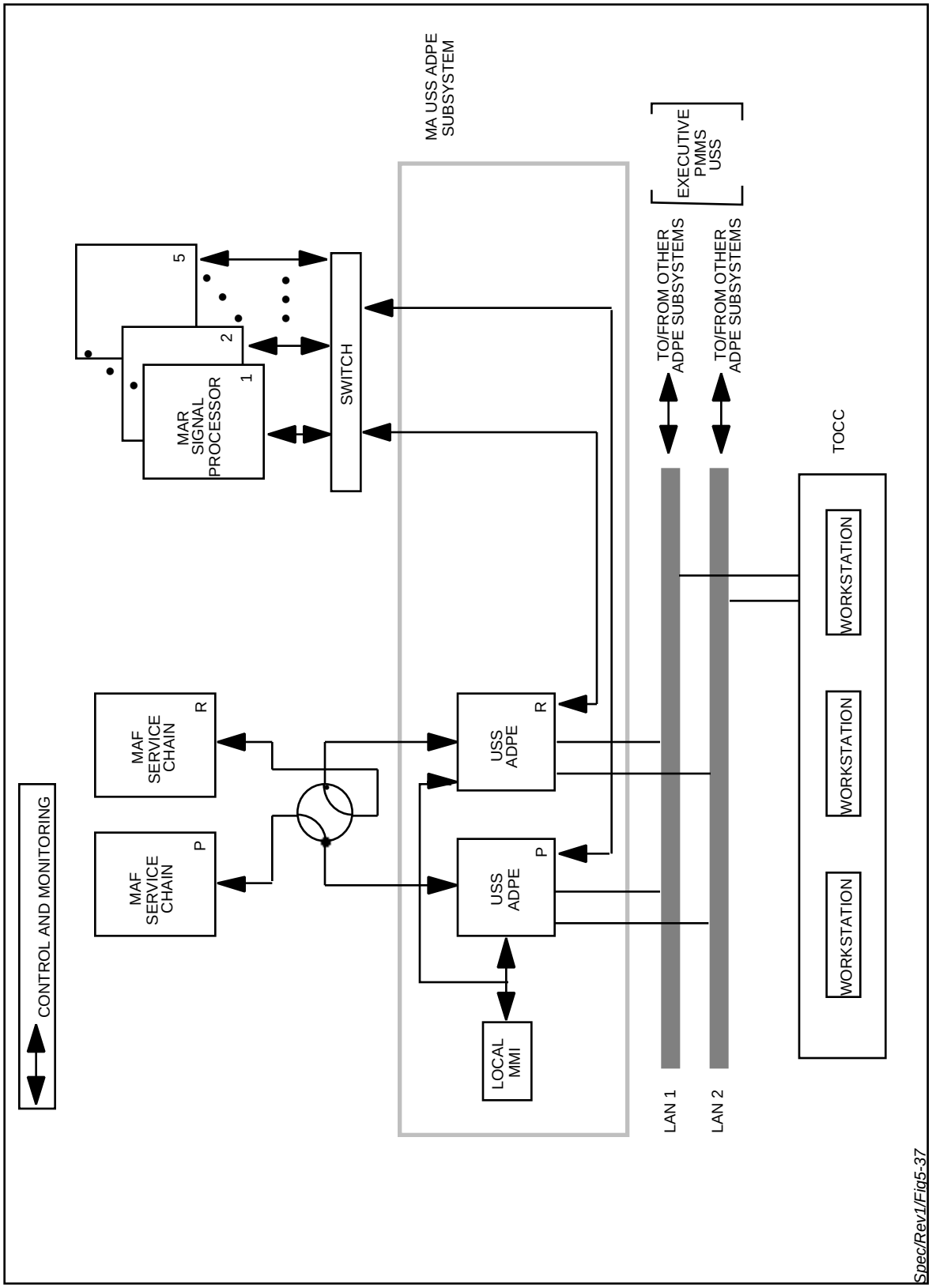

Figure 5-37. USS MA ADPE Subsystem Reference Architecture

5.6.3.2.2 Perform Ephemeris and Related Computations

The USS ADPE Subsystem shall perform the following computations:

a. Propagate and interpolate customer state vectors and interpolate TDRS state vectors as specified in Appendix A.

b. Interpolate customer maneuver vectors as specified in Appendix A.

c. Use the TDRS and Customer ephemerides computed in Items a. and b. to:

   1. Compute forward and return Doppler as required for customer service support. "As required" shall be defined to mean that Doppler computations shall be performed at any time prior to the configuration and control of USS equipment, depending upon when TDRS and customer ephemerides have been made available.

   2. Compute PN search data as required for PN acquisition.

5.6.3.2.3 Configuration and Control of USS Equipment

The USS ADPE Subsystem shall generate commands from SHO data and from ephemerides to support USS equipment configuration, reconfiguration and control, service initiation, and carrier frequency and PN chip rate Doppler compensation.

The USS ADPE Subsystem shall generate as a minimum the following USS equipment configuration and control commands:

a. Forward Customer Service. The USS ADPE Subsystem shall generate all USS equipment configuration and control commands required for support of customer forward service. These commands shall include but not be limited to:

   1. Commands to configure and reconfigure USS equipment.

   2. Modulator setup commands.

   3. Doppler compensation commands.

   4. Frequency select and sweep commands.

   5. Transmitter power level control commands (SA service equipment only).

   6. Data Presence Monitoring (DPM) equipment setup commands.

   7. Service termination commands.

b. Return Customer Service. The USS ADPE Subsystem shall generate all USS equipment configuration and control commands required for support of customer return service. These commands shall include, but not be limited to:

   1. Commands to configure and reconfigure USS equipment.

   2. TDRS equalizer select commands (SA service equipment only).

   3. Carrier and PN chip rate Doppler correction commands, as necessary.

4. Demodulator setup commands.

5. Bit synchronizer setup commands.

6. Convolutional decoder setup commands.

7. Deinterleaver setup commands.

8. Data Quality Monitoring (DQM) equipment setup commands.

9. Service termination commands.

10. MA beamforming commands (MA service equipment only).

c. Tracking Service. The USS ADPE Subsystem shall generate all equipment configuration and control commands required for support of customer tracking service. These commands shall include, but not be limited to:

1. Commands to configure and reconfigure customer range and Doppler equipment.

2. Doppler reference frequency commands.

3. Service termination commands.

d. Interservice. The USS ADPE Subsystem shall generate all equipment configuration and control commands required for interservice period. These commands shall include the selection of PN code assignment 48 to modulate the forward carrier.

5.6.3.2.4 Provide Pre-Service Testing Support to the PMMS

The USS ADPE Subsystem shall generate all equipment configuration and control commands required to support the PMMS in performing pre-service testing, performance measuring and diagnostic testing. This support shall include but not be limited to:

a. From the pre-service test schedule, generate commands to configure and control USS equipment setup in accordance with the test schedule. These commands shall include but not be limited to those commands specified in Section 5.6.3.2.3 with the following exceptions:

1. DQM equipment setup commands are not required.

2. For forward service testing, the USS ADPE Subsystem shall generate commands to configure the forward service chain to receive data from PMMS instead of from the DIS, and to provide the service chain output to the PMMS.

3. For return service testing, the USS ADPE Subsystem shall generate commands to configure the return service chain to receive data from the PMMS instead of from the RF Power Divider and to provide the service chain output to the PMMS instead of to the DIS.

b. Generate commands to support the PMM ADPE Subsystem in determining the range zero set (Section 5.5.2.4) which shall be used to compensate for SGLT delays when generating customer spacecraft range measurements and determining the SGLT data delay measurement (Section 5.5.2.5).

5.6.3.2.5 Provide Service and Test Initiation Support

The USS ADPE Subsystem shall execute commands specified in Sections 5.6.3.2.3 and 5.6.3.2.4 to initiate the scheduled customer service or PMMS test. Service and test initiation shall include but not be limited to:

5.6.3.2.5.1 Service and Test Initiation

The USS ADPE Subsystem shall support forward and return service, and test initiation as specified below:

a. Forward Service Test Initiation

   1. Execute commands to configure and control the USS forward service equipment. At the scheduled service or test start time, initiate the forward link.

   2. At the scheduled service or test start time notify the Executive ADPE Subsystem and alert the TOCC and the Local MMI that forward link is in progress.

   3. At the scheduled service or test start time, execute customer PN chip rate and carrier frequency Doppler compensation commands as required by the service schedule.

      (a) Execute customer PN chip rate and carrier frequency Doppler compensation commands until receipt of a Doppler compensation inhibit request from the Executive ADPE Subsystem or until service or test termination. Provide independent Doppler compensation of the Shuttle forward PN chip rate and carrier frequency.

      (b) If the schedule or test requests no Doppler compensation, hold the PN chip rate and carrier frequency at their requested values for the duration of the service or until the receipt of a request from the Executive ADPE Subsystem for Doppler compensation for the service. Doppler compensation shall be completed within 5 seconds of receipt of the request at the DIS ADPE Subsystem.

b. Return Service Test Initiation

   1. Execute commands to configure and control the USS return service equipment. At the scheduled service or test start time initiate customer return link acquisition.

   2. At the scheduled service or test start time, notify the Executive ADPE Subsystem, alert the TOCC and the Local MMI that return link acquisition is in progress.

   3. Execute acquisition commands to the USS.

   4. Notify the Executive ADPE Subsystem, and alert the Local MMI and the TOCC if PN lock, carrier lock, bit synchronizer lock(s) and decoder locks are not achieved within the allotted acquisition time.

   5. Initiate data channel ambiguity resolution as specified in Section 5.3.2.3.1.5 (SSA) and 5.3.2.3.2.5 (KSA) upon receipt of a lock status from the demodulator. Data channel ambiguity resolution is not applicable for USS MA services.

6. Notify the Executive ADPE Subsystem, and alert the Local MMI and the TOCC that the demodulator, bit synchronizer and decoder (if applicable) acquisitions are complete when each associated status indicates lock.

5.6.3.2.6 Provide During-Service Support

The USS ADPE Subsystem shall perform as a minimum the following support functions during the provision of customer services:

a. Equipment performance monitoring.

b. Control failover to redundant USS service chains.

c. Dynamic frequency control.

d. ODM and TDM data to the Executive ADPE Subsystem.

e. Customer Acquisition and Reacquisition.

f. Customer reconfiguration.

g. Channel ambiguity resolution.

h. Generate and provide beam pointing vector commands to the MAR equipment to form the beam(s) at the scheduled MA customer(s).

i. Maintain pointing losses to less than 0.1 dB for MA services.

5.6.3.2.6.1 Equipment Performance Monitoring

The USS ADPE Subsystem shall:

a. Collect customer service chain equipment and line replaceable unit (LRU) operational status information.

b. Collect customer service operations and performance data at least once per second, time-tag the data and provide the data to the PMM ADPE Subsystem.

c. In conjunction with the USS, provide tracking data quality information to the PMM ADPE Subsystem which shall include the following:

   1. Estimates of the noise of the data using digital filtering of the raw tracking data.

   2. Consistency checks between raw Doppler data and Doppler computed by differencing the raw range data.

   3. Checks for static range and Doppler data.

d. Collect data channel quality information generated by DQM and DPM equipment, process the data as necessary, time-tag the data and provide the data to the Executive and PMM ADPE Subsystem.

e. Perform equipment operational checks and alert the TOCC or Local MMI if any equipment operational checks fail.

f. Perform demodulator, bit synchronizer and decoder (if applicable) lock checks. Initiate automatic reacquisition as specified in Section 5.6.3.2.6.5 if any locks fails.

5.6.3.2.6.2 Failover Control to Redundant (Backup) USS Service Chain

The USS ADPE Subsystem shall support the following:

a. TOCC and Local MMI capability to control failover from prime USS forward and return service chains to redundant USS service chains.

b. The capability of independently switching either the prime or redundant forward and either the prime or redundant return service chains to the prime or redundant USS ADPE Subsystem, with switching controlled by the prime USS ADPE Subsystem.

c. Continuous monitoring of the switches controlling the configuration of the prime and redundant chains.

d. Redundant switching shall be performed such that forward and return customer support shall be by the same USS ADPE Subsystem.

5.6.3.2.6.3 Dynamic Frequency Control

The dynamic frequency control functions shall include:

a. Doppler Compensation Inhibit

1. Doppler compensation inhibit shall be completed (the forward link carrier frequency shall be fixed) within 20 seconds after receipt of the Doppler compensation inhibit OPM at the DIS ADPE Subsystem.

2. The S-band carrier frequency shall be fixed to an integer multiple of 221 Hz, and the Ku-band carrier frequency shall be fixed to an integer multiple of 146.9 Hz.

3. A slow linear transition from the Doppler compensation profile to the fixed integer multiple of the forward link carrier frequency shall be provided. The transition period shall be 9 seconds.

4. Capability shall be provided to independently compensate or inhibit compensation on the S-band Shuttle forward link PN chip rate and the carrier frequency.

b. Forward Link Frequency Sweep

1. Initiate a forward link frequency sweep within 10 seconds of receipt of a Forward Link Frequency Sweep OPM at the DIS ADPE Subsystem.

2. For SSA and MA service, the forward link carrier sweep shall be initiated at f_o - 3 kHz (f_o is the nominal customer spacecraft frequency defined in the SHO) and linearly swept to f_o + 3 kHz in 120 seconds and held at f_o + 3 kHz thereafter.

3. For KSA service, the forward link carrier sweep shall be initiated at f_o - 30 kHz and linearly swept to f_o + 30 kHz in 120 seconds held at f_o + 30 kHz thereafter.

4. Forward link sweep shall not affect simultaneous Doppler compensation of f_o as specified in the schedule data.

5. Forward link sweep shall not be required for Shuttle S-band service.

c. Expanded Customer Frequency Uncertainty. Within 5 seconds of receipt of an Expanded Customer Frequency Uncertainty OPM at the DIS ADPE Subsystem, the USS ADPE Subsystem shall complete a reconfiguration to accommodate a ± 3 kHz (S-band) or a ± 20 kHz (Ku-band) customer transmit frequency uncertainty. An expanded search range of ± 40 kHz shall be used for SSA DG2 M2 UQPSK and BPSK modes.

5.6.3.2.6.4 Provide ODM and TDM Data to the Executive ADPE Subsystem

The USS ADPE Subsystem shall time-tag and transmit ODM and TDM data to the Executive ADPE Subsystem. The ODM and TDM data content are specified in 530-ICD-NCC-FDF/WSC. The USS ADPE Subsystem shall:

a. Transmit time-tagged ODM data to the Executive ADPE Subsystem once every five seconds. The ODM time-tag shall reflect the integral second immediately preceding thetime of acquiring the USS performance data. The ODM data shall be on time with respect to the time-tag to 0.5 seconds.

b. Transmit TDM data, which shall contain range and/or Doppler tracking data, to the Executive ADPE Subsystem, as scheduled in the SHO. The TDM data shall be time-tagged with a resolution of 1 microsecond and shall be adjusted by the range zero set value.

c. Support range tracking by accepting raw range measurements from the range measurement equipment and applying the range zero set (Section 5.6.3.2.4b) for generating TDM data (Item b. above). The range zero set shall be corrected to account for the path difference between the measurement point at the feed horns (Section 5.5.2.4) and a reference point at the intersection of the Az/El axes. The USS ADPE Subsystem shall support the following sampling rates (in seconds per sample): 1, 5, 10, 60, 300.

d. Support Doppler tracking by accepting the Doppler measurements from the Doppler measurement equipment for generating TDM data. The USS ADPE Subsystem shall support the following sampling rates (in seconds per sample): 1, 5, 10, 60, 300. The following requirements shall apply to Doppler measurements:

1. For two-way Doppler measurements, the reference frequency for the Doppler measurement equipment shall be a multiple of $\frac{240}{221}$ for S-band or $\frac{1600}{1469}$ for Ku-band of the forward link frequency. The forward link frequency shall be a multiple of 221 Hz for S-band or 146.9 Hz for Ku-band. The reference frequency shall be an integer multiple of 10 Hz to the accuracy of the CTFS.

2. For one-way Doppler measurements, the reference frequency shall be the customer transmit frequency as defined in the schedule data to the accuracy of the CTFS.

5.6.3.2.6.5 Customer Acquisition and Reacquisition

The operational requirements for WSC forward and return acquisition, reaquisition and reconfiguration of customer spacecraft are specified in this section and Section 5.6.3.2.6.6. Definitions relative to these requirements are the following:

a. Link acquisition. PN code and carrier lock for DG-1, modes 1 and 2 and DG-1 Mode 3, I Channel. Carrier lock for DG-2 and DG-1, Mode 3, Q Channel. For Channel 3 of Shuttle Ku-band Mode 1, link acquisition is carrier lock. For Channels 1 and 2 of Shuttle Ku-band Modes 1 and 2, link acquisition is subcarrier lock.

b. Channel acquisition. Convolutional decoding synchronization and/or clock synchronization (Clock synchronization means bit <u>or</u> symbol synchronization).

c. Acquisition. Initial acquisition at either the start of scheduled service or after return link service equipment has been reconfigured in response to either a customer reconfiguration or a return link operations message from NCC. Acquisition applies to both link and channel.

d. Reacquisition. Acquisition due to loss of carrier and/or subcarrier lock after initial link acquisition. Acquisition required due to loss of decoding and/or clock synchronization after initial channel acquisition.

e. Link Operations Messages. These are defined to be Doppler Compensation Inhibit, Forward Link EIRP Reconfiguration, and Expanded Customer Frequency Uncertainty.

5.6.3.2.6.5.1 Start of Service

At the start of return link service, link acquisition shall be performed (based on parameters in the return service schedule) automatically and continuously until the return link has been acquired. After the link is acquired channel acquisition shall be performed (based on parameters in the return service schedule) automatically and continuously until the channel(s) is (are) acquired. Failure to acquire the channel for a single data channel configuration shall not affect link lock. For a dual channel customer (SSA, KSA, Shuttle Ku-band Mode 2 Channels 1 and 2), if one channel is in lock, failure to acquire the other channel shall not affect either link lock or channel lock for the acquired channel. For a three-channel customer (Shuttle Ku-band Mode 1), if one or two channels are in lock, failure to acquire the remaining channel(s) shall not affect either the link lock or channel lock for the acquired channel(s).

5.6.3.2.6.5.2 Loss of Lock

If the return link drops lock (after initial acquisition or reacquisition), link reacquisition shall be performed automatically and continuously until the link is reacquired. For Shuttle Ku-band, loss of subcarrier lock shall not affect carrier lock for Mode 1 and Channel 3 for Mode 2.

If a channel drops lock (after initial acquisition or reacquisition), channel reacquisition shall be performed automatically and continuously until the channel is reacquired. This channel reacquisition shall not affect link lock or channel lock of the other channels of a multichannel link i.e., dual data channel configuration for SSA, KSA, Shuttle Ku-band Mode 2, three data channel configuration for Shuttle Ku-band Mode 1.

5.6.3.2.6.5.3 Reacquisition Request

Reacquisition of forward and return services shall be requested by NCC via a Reacquisition Request OPM (530-ICD-NCC-FDF/WSC) or locally requested via the TOCC or Local MMI. Reacquisition requests shall be used to recover from false lock and shall initially force a loss of lock by the customer spacecraft (forward reacquisition) and by the USS equipment (return reacquisition).

a. Forward Service Reacquisition. When a forward reacquisition request is received, the TT&C ADPE Subsystem shall:

   1. Command the TDRS to maximum forward link power attenuation for 15 seconds.

   2. Reinitiate forward customer service consistent with applicable customer parameters and dynamics.

   3. Complete Items 1. and 2. above within 20 seconds of receipt of the Reacquisition Request OPM at the DIS ADPE Subsystem or within 20 seconds of a TOCC or Local MMI request.

b. Return Service Reacquisition. When a return reacquisition request is received, the USS ADPE Subsystem shall:

   1. Force a loss of return link lock.

   2. Reinitiate return customer service consistent with applicable customer parameters and dynamics.

   3. Complete Items 1. and 2. above within 10 seconds of receipt of the Reacquisition Request OPM at the DIS ADPE Subsystem or within 10 seconds of a TOCC or Local MMI request.

5.6.3.2.6.6 Customer Reconfiguration

In response to a NCC Customer Reconfiguration OPM (530-ICD-NCC-FDF/WSC), the USS and/or TT&C ADPE Subsystem(s) shall complete equipment configuration, if necessary, and initiate reacquisition, if necessary, within 35 seconds of receipt of the Customer Reconfiguration OPM at the DIS ADPE Subsystem. Customer reconfigurations shall include:

a. Change in mode of operation of DG1.

b. Change in data rate, data format or data bit jitter.

c. Initiation or termination of DG1 operations.

d. Initiation or termination of DG2 operations.

e. Initiation or termination of the command channel PN code modulation.

f. Reinitiation of forward link carrier Doppler compensation.

g. Reinitiation of Shuttle PN rate Doppler compensation.

h. Change in forward and/or return link carrier frequency.

i. Change in Shuttle S-band return link mode.

j. Initiation or termination of Shuttle coherent carrier turnaround.

k. Initiation or termination of PN code modulation for Shuttle S-band forward link.

l. Change in Shuttle Ku-band mode of operation.

m. Initiation or termination of PN code modulation for Shuttle Ku-band command channel.

n. Redefinition of maximum and minimum customer EIRP.

o. Redefinition of I-channel/Q-channel power ratio.

p. Initiation or termination of symbol interleaving.

q. Change from/to single or dual data source.

r. Change from/to QPSK or BPSK.

s. Change of polarization.

t. Change in Shuttle S-band carrier frequency.

u. Initiation, termination, or type change of customer despun antenna.

v. Autotrack enable/disable.

5.6.3.2.6.6.1 Return Link Service Operation in Response to Customer Reconfiguration and Link Operation Messages

The USS ADPE Subsystem in conjunction with the USS shall minimize service link interruptions due to Customer Reconfiguration OPMs. Return link service customer reconfigurations and link operation messages which only impact the configuration of data channel equipment (e.g., clock synchronizer, convolutional decoder) shall not cause the link lock to be affected and shall not cause channel lock on the other channels of a multichannel configuration to be affected.

5.6.3.2.6.6.2 Forward Link Service Operation in Response to Customer Reconfiguration and Link Operation Messages

The USS ADPE Subsystem in conjunction with the USS shall minimize service link interruptions due to Customer Reconfiguration OPMs.

Forward link service reconfigurations and forward link service operations messages shall only affect the service parameters which are requested to be changed. Unless requested. a customer reconfiguration or operations message shall not initialize or interrupt the transmission of the transmitted PN code and/or carrier.

5.6.3.2.6.7 Channel Ambiguity Resolution

The USS ADPE Subsystem, in conjunction with the USS, shall resolve channel ambiguity for return service with dual data channels as specified in Section 5.3.2.3.1.5 (SSA) and Section 5.3.2.3.2.5 (KSA).

5.6.3.2.7 Provide Service Termination Support

The USS ADPE Subsystem shall terminate customer service at the scheduled stop time, or upon request from the TOCC or the Local MMI. The USS ADPE Subsystem shall send a service termination message to the Executive ADPE Subsystem, PMM ADPE Subsystem, the TOCC and the Local MMI. The Executive ADPE Subsystem shall send a service termination message (OPM-Class 57) to the NCC.

For SA and MA service termination, the USS ADPE shall set the PN code to Customer Code 48. In addition, if the service is SSA, the forward frequency shall be set to 2030 MHz.

5.6.3.2.8 Provide Equipment Status and Service Performance Data During Testing and Maintenance

During pre-service testing and maintenance testing, the USS ADPE Subsystem shall:

a. Collect and time-tag status of customer service chain equipment including LRU status and forward the status data to the PMM ADPE Subsystem.

b. Collect and time-tag customer service operations and performance data and forward the data to the PMM ADPE Subsystem.

5.6.3.2.9 Provide Local Control Mode Support

During local control mode the functions listed in Section 4.5.2.c shall be supported.

a. The following customer and TDRS support functions shall be provided:

    1. Allocation of the TDRS, Spare 19-meter antenna (Danzante and Cacique only), EET antenna, and SGLT service chains.

    2. Reservation of equipment for maintenance and testing.

    3. Cancellation of a customer or TDRS support service.

b. Initiation of the operations orders listed below shall be supported.

    1. OPM 02 - Reaquisition.

    2. OPM 03 - Reconfiguration (except for cross support services and DQM, max/min EIRP, and G2 Inversion parameters).

    3. OPM 04 - Forward Link Sweep.

    4. OPM 12 - Cancel SHO.

5.6.3.2.10 Provide TOCC Workstation Support

The USS ADPE Subsystem shall support TOCC operations to perform the functions specified in Section 5.6.3.2.9. The USS ADPE Subsystem shall provide the TOCC workstations with all USS data required for TOCC control of customer operations.

5.6.3.2.11 Perform Logging, Archiving, and Delogging

Logging, Archiving, and Delogging requirements shall be as specified in Section 5.6.1.1.1. The USS ADPE Subsystem shall provide logging, archiving and delogging of USS equipment status, service performance status data, operations messages, and TOCC and Local MMI commands. The USS ADPE Subsystem shall receive binary status and digitized performance data once per second from the USS service chain equipment. The USS ADPE Subsystem shall alert the Executive ADPE Subsystem, the TOCC and the Local MMI of failure to receive status or digitized performance data for two seconds.

5.6.3.3 Interface Requirements

In addition to the LAN interface, the USS ADPE Subsystem shall have two interfaces.`

a. Service Bus Interface. Each USS ADPE Subsystem shall have independent interfaces with the prime and redundant USS service chains as indicated in Figure 5-36.

b. Local MMI Interface. Each prime/redundant pair of USS ADPE Subsystems shall have an operator MMI, including a video display (VDU) and keyboard, to provide local control capabilities. The Local MMI interface shall meet functional requirements of Section 5.6.3.2.9.

5.6.4 TT&C ADPE Subsystem

5.6.4.1 Overview and Architecture

a. General. The TT&C ADPE Subsystem, in conjunction with the SGLT TT&C Subsystem (TTCS) and the TOCC, shall provide TDRS command generation, telemetry processing, and TDRS ranging. Customer support and TDRS services provided shall include:

   1. TDRS stationkeeping and attitude control.
   2. TDRS orbit determination.
   3. TDRS spacecraft and payload configuration control.
   4. TDRS resource maintenance, control, and monitoring.
   5. TDRS single access antenna (SAA) pointing and polarization control.
   6. TDRS SGL antenna pointing control.
   7. SGLT antenna pointing and polarization alignment control.
   8. TDRS MA transmit RF beam control.

b. Compatibility Requirements. The TT&C ADPE Subsystem shall be compatible with existing TDRS design, operations, signaling and performance requirements. These requirements include:

   1. TDRSS Command Requirements Document No. D01450F.
   2. TDRSS Telemetry Requirements Document No. D01451F.
   3. TDRSS Spacecraft/Ground Segment ICD: STDN 220.29.

4. TDRS F-7 Interface Control Document for the TDRS Spacecraft/Ground Segment, 405-F7-ICD-001.
5. TDRSS Space Segment Specification: WU-02-01.
6. TMO 253 VOLS I-IV, TDRSS Spacecraft Operations Handbook.
7. TMO 254 VOLS I-III, TDRSS Spacecraft Systems Manual.
8. Software Task Requirements (STR):
   a. White Sands Ground Terminal Software Task Requirements, WS-SE-0101.
   b. Algorithms and Constraints Interface Control Document, STGT-HE-06-3, Book 1 Section 4.
9. TDRSS System Design Report, Vol. III, Space Segment, TRW: 29000-200-003-003.

These functions shall be performed in direct support of in-orbit and on-station TDRS satellites. No additional SGLT functional requirements shall be imposed in order to support TDRS launch and insertion. The SGLT shall not be precluded from supporting TDRS launch and insertion using the functions specified in this Specification.

c. Requirements Overview. SGLT TT&C functional and performance requirements are divided into the following areas:

   1. TT&C ADPE Subsystem (Section 5.6.4).
   2. TT&C Subsystem (Section 5.4).
   3. TT&C TDRSS Operations and Control Center-2 (TOCC) (Section 9).

Functional and interface requirements are specified in Sections 5.6.4.2 and 5.6.4.3, respectively.

d. Architecture. Figure 5-38 is the reference architecture of the TT&C ADPE Subsystem. The figure illustrates the functional relationship between one set of prime and redundant APDE Subsystems and its associated equipment chains. The following architectural requirements shall apply:

   1. There shall be a prime and a redundant TT&C ADPE Subsystem.
   2. The prime and redundant TT&C ADPE Subsystems shall be capable of supporting either the prime or redundant uplink equipment chains, but not both simultaneously.
   3. The prime and redundant TT&C ADPE Subsystems shall be capable of supporting either the prime or redundant downlink equipment chains, but not both simultaneously.
   4. A single ADPE Subsystem shall control the operational uplink and downlink equipment.
   5. Each prime/redundant pair of TT&C ADPE Subsystems shall have a dedicated MMI referred to as the Local MMI.

6. The prime/redundant configuration status represented by the functional switches of Figure 5-38 shall be provided to both the prime and redundant TT&C ADPE Subsystems.

e. Stand-Alone Operation. In the event of failure of other components of the CDCN, the TT&C ADPE Subsystems shall operate in a stand-alone mode to provide all functions required for the health, safety and control of the TDRS.

The performance of these functions shall not require inputs from other elements of the CDCN. The TT&C ADPE Subsystem shall be placed in the stand-alone mode by operator input (TOCC or Local MMI).

5.6.4.2 Functional Requirements

TT&C ADPE Subsystem functional requirements are specified below:

5.6.4.2.1 Command Generation

The TT&C ADPE Subsystem shall:

a. Format and prepare all required commands for transmission to the TDRS via the TTCS. The TDRS command format and dictionary shall be as defined in the TDRSS Command Requirements Document D01450F.

b. Prior to formatting, validate commands to determine if the requested commands are constructible, e.g., correct number of parameters, and customer address or vehicle addressed specified.

c. Provide the capability to flag commands requiring operator authorization.

d. For each command, check to determine if the command has been flagged as in Item c. above, and if so, alert the TOCC and the Local MMI and do not process the command unless requested by operator override.

e. Verify the TDRS I.D. in each command word; if validation fails, do not process the command.

f. Process commands at a maximum rate of 50 commands/sec. For continuous commanding, insert filler commands to achieve the maximum rate.

g. Accept command inputs from the TOCC and the Local MMI in the form of alphanumeric command mnemonics and execution times; validate each command and reject invalid commands. All commands shall be in memory and available to be addressed by command number, command name, or command index.

h. Accept from other TT&C ADPE Subsystem functions, the Local MMI, and the TOCC, single commands, multiple or stacked commands, repetitive commands, or any combination of the above.

i. Commands which are time-tagged with a specified execution time shall be presented to the TTCS for transmission at the specified time. Commands shall be merged into a transmittable command stream with the following priority:

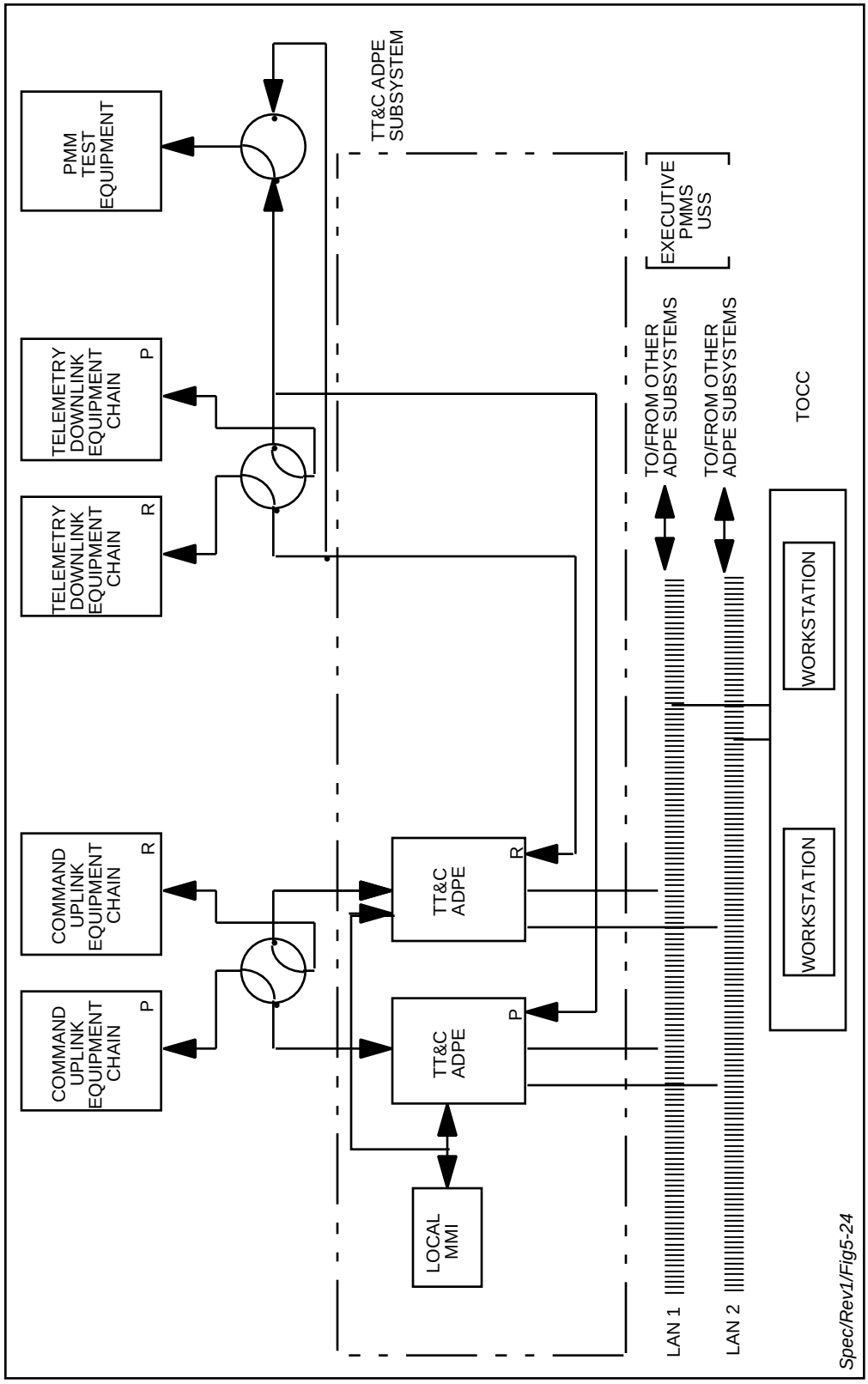

Figure 5-38. TT&C ADPE Subsystem Reference Architecture

1. Gimbal, MA and pre-emphasis commands.
2. Burn commands.
3. Time-tagged commands.
4. First-in/First-out commands.

j. Ensure that constraints relating to minimum spacing between commands are satisfied based on TTCS and TDRS capability.

k. Provide all formatted transmitted commands for logging.

l. Monitor the current TDRS configuration as affected by TDRS commands.

m. Flag commands for telemetry echo as required by operator input.

5.6.4.2.2 Telemetry Processing

The TT&C ADPE Subsystem shall accept and process the telemetry data stream from the TTCS. The telemetry format and definition are specified in the TDRSS Telemetry Requirements Document D01451F. The TT&C ADPE Subsystem shall:

a. Verify telemetry input in accordance with STR OPS-26, TDRSS Telemetry Verification.

b. Process bit and frame synchronized telemetry data at a rate of either 4, 1, or 0.25 kbps.

c. Have the capability to construct parameters from one of the following:

1. One mainframe to subcommutator word.
2. A portion of one mainframe or subcommutator word.
3. A combination of bits or whole words from more than one mainframe word.
4. A combination of bits or whole words from more than one word within a subcommutator cycle.

d. Convert the raw telemetry parameter values to engineering units when applicable.

e. Identify all parameters that have changed from the last reported value by the prespecified delta for each parameter. Provide changed parameters for logging.

f. Determine if a telemetry parameter value is an alarm condition based on one of the following conditions and alert the TOCC operator:

1. Upon change of value unless the parameter is an initial value.
2. Upon exceeding the prespecified out-of-limit conditions.

5.6.4.2.3 TDRS Ranging

The TT&C ADPE Subsystem requirements to support TDRS ranging are specified in Software Task Requirements (STR) (WS-SE-0101) H-8, and shall include the following:

a. Accept TOCC inputs which either:

   1. Activate/terminate ranging measurements for manually controlled operation.

   2. Initiate/terminate the automatic sequencing mode.

b. Configure and control the TTCS range unit:

   1. Switch the range unit to the appropriate Command Uplink and Telemetry Downlink equipment chains.

   2. Control range acquisition.

c. Provide raw ranging measurements for display, logging and printing.

d. Process the raw tracking data:

   1. Resolve for measurement ambiguity.

   2. Correct for equipment bias and propagation delay.

   3. Convert to engineering units.

   4. Edit for invalid data points and excessive measurement error.

e. Provide the tracking data to the Executive ADPE Subsystem for transmission to the FDF.

5.6.4.2.4 TDRS Orbit Determination and State Vector Generation

The TT&C ADPE Subsystem shall:

a. Perform orbit determination for the assigned TDRS using the TDRS Ranging and ground antenna pointing data.

b. Propagate the TDRS state vector resulting from the orbit determination.

The TDRS state vectors resulting from Items a. and b. shall provide a backup for customer support and TDRS control in the absence of the TDRS state vectors provided by NCC (Appendix A). The accuracy of the TDRS state vectors resulting from Items a. and b. shall be consistent with the requirements of this specification for TDRS antenna pointing, customer Doppler compensation, ground antenna pointing and TDRS maneuver planning.

In order to minimize differences between TDRS ephemerides generated at WSC and those generated by NASA, the WSC shall employ coordinate systems, geopotential model, sun-moon-planetary ephemerides, solor radiation model and atmospheric drag model identical to those used by NASA.

5.6.4.2.5 Vector Propagation and Interpolation

The TT&C ADPE Subsystems shall:

a. Use the methods and algorithms specified in Appendix A to:

   1. Propagate and interpolate customer state vectors to generate customer ephemerides.

   2. Interpolate TDRS state vectors to generate TDRS ephemerides.

b. Accept either a NCC provided TDRS state vector or a TDRS state vector generated by the TT&C ADPE Subsystem.

5.6.4.2.6 Sun/Moon Intrusion Prediction

The TT&C ADPE Subsystem requirements to support Sun/Moon Intrusion prediction are specified in STR ACS-15, and shall include the following:

a. Calculate the predicted time when the sun and/or moon intrudes into the TDRS spacecraft earth sensor field of view, identify the earth sensor scan whose field is intruded, and identify the intruding body (sun and/or moon).

b. The period of interest for the calculations, i.e., the prediction period, shall be selectable by the TOCC or the Local MMI.

c. Compute the sun-earth and moon-earth angles as seen from TDRS.

d. The predicted intrusion time shall be accurate to within ± 15 minutes and the angular accuracy shall be within ± 0.1°.

5.6.4.2.7 Attitude Determination

The TT&C ADPE Subsystem requirements to support attitude determination are specified in STR ACS-2 and ACS-3 Mod I, and shall include the following:

a. Compute spacecraft pitch and roll attitude using telemetered earth sensor readouts, compensating for the effect of noise, quantization and altitude variation. The following attitude position accuracies shall be required:

   1. 0.03° (3 sigma) during steady state normal mode.

   2. 0.04° (3 sigma) within the 20 second period following the start or stop of a SA antenna slew.

b. Compute pitch and roll attitude after the receipt of the updated Earth Sensor data every telemetry data mainframe, approximately every 0.512 seconds (for a 1 kbps telemetry data rate).

c. Calculate the estimated spacecraft yaw attitude using telemetered readouts of the fine sun sensors, the earth sensors, reaction wheel speeds, and spacecraft and solar ephemerides; the following yaw position accuracies shall be required:

   1. ± 0.25° during all periods of the orbit.

   2. Of this error, 0.15° is allocated to the process of yaw angle estimation and 0.20° to the fine sun sensor calibration.

d. Compute yaw attitude at least once for each two telemetry data mainframes, approximately every 1.024 seconds.

e. Achieve the specified performance in both Normal and Earth attitude control Modes (TDRSS System Design Report, Vol. III, Space Segment, 29000-200-003-003).

5.6.4.2.8 Momentum Dumping

The TT&C ADPE Subsystem requirements to support momentum dumping are specified in STR ACS-12 and ACS-13, and shall include the following:

a. Roll/Yaw Momentum Dumping.

   1. Support operations necessary to unload the accumulated momentum due to roll/yaw solar torques.

   2. Compute the transverse momentum at a fixed interval (on the order of 1 to 5 minutes).

   3. Alert the TOCC and the Local MMI when the transverse momentum exceeds a prespecified value.

   4. Compute the transverse momentum with an accuracy of ± 0.001 ft-lb-sec.

   5. Format data and commands to be transmitted to TDRS:

      (a) Yaw Thruster Firing Command to cause a specific amount of transverse momentum to be unloaded from the reaction wheels.

      (b) Reaction Wheel Bias Command for pre-emphasis.

b. Pitch Momentum Dumping.

   1. Support operations necessary to unload the accumulated reaction wheel momentum due to pitch solar torques.

   2. Compute the reaction wheel speeds once every minute.

   3. Alert the TOCC and the Local MMI when the sum of the reaction wheel speeds fall outside a prespecified range.

   4. Compute the wheel speed sum with an accuracy of ± 5 rpm.

   5. Format data and commands to be transmitted to TDRS.

      (a) Pitch Thruster Firing Sequence Command to cause a specific amount of momentum to be unloaded from the reaction wheels.

      (b) Pitch Integrator Change Command for pre-emphasis.

5.6.4.2.9 Maneuver Planning Support

The TT&C ADPE Subsystem requirements to provide maneuver planning support are specified in STR D-7, and shall include the following:

a. Accept as inputs:

   1. Initial State Vectors.

   2. Spacecraft specific database items (e.g., spacecraft total weight, propellant weight, plume impingement data, and thruster mechanical alignments).

   3. Program control inputs (e.g., epoch time and number of program elements to be executed).

   4. Orbit control input (e.g., orbit control mode).

b. Provide as output:

   1. Mean and osculating orbit elements.

   2. An impulsive ΔV maneuver sequence.

   3. An equivalent set of finite burn data for all free and powered flight phases.

   4. Estimated propellant consumed for each maneuver (Section 5.6.4.2.27).

c. Perform the functions specified above to support TDRS initial positioning, stationkeeping, and repositioning.

d. Monitor thruster performance in accordance with STR ACS-24.

5.6.4.2.10 TDRS Command Verification

The TT&C ADPE Subsystem requirements to support Command Verification are specified in STR OPS-12, and shall include the following:

a. Upon TOCC or Local MMI request, select a command for TDRS echo by setting a one in the A0 bit of the vehicle address every n commands, where n is an integer selectable from the TOCC or the Local MMI.

b. Process differences in successive telemetered states of the command counter to generate alarms to the TOCC and the Local MMI to indicate command link malfunction.

c. Provide the TOCC and the Local MMI, the capability to select the number of commands between echo flags.

d. Provide the capability to allow the TOCC or the Local MMI to select echo commands (set the A0 bit high) for any manually generated commands.

5.6.4.2.11 TDRS Eclipse Prediction

The TT&C ADPE Subsystem requirements to provide TDRS Eclipse prediction are specified in STR OPS-24, and shall include the following:

a. Calculate the predicted start and stop time of solar eclipses of the TDRS by either the earth or moon (or both).

b. Conduct the calculation for a time period selectable by the TOCC or the Local MMI.

c. Compute angles to an accuracy of 0.1° or better.

5.6.4.2.12 Battery Charge Monitoring

The TT&C ADPE Subsystem requirements to provide battery charge monitoring are specified in STR OPS-25, and shall include the following:

a. Compute the charge and discharge ampere hours for each battery utilizing every sample of the telemetry data.

b. Perform the computation when requested by the TOCC and the Local MMI.

c. The program calculation and round-off errors shall be accurate to the nearest 0.1 amp-hour.

d. Alert the TOCC and the Local MMI if the charge to discharge ratio exceeds a pre-specified limit.

5.6.4.2.13 Stationkeeping Pulsewidth Command

The TT&C ADPE Subsystem requirements to generate the Stationkeeping Pulsewidth Command are specified in STR ACS-23, and shall include the following:

a. Accept as inputs:

   1. Start time for ΔV burn.

   2. Total duration time for burn.

   3. Command overlap time.

b. Determine and issue the ΔV pulsewidth command:

   1. ΔV burns $\leq$ 51 sec: the pulsewidth shall be set to the duration time.

   2. ΔV burns > 51 sec: the pulsewidth shall be set to 51 sec. and the pulsewidth command shall be reissued every 51 sec. minus the overlap time and the remaining burn time computed.

c. Be capable of receiving and executing an abort request from the TOCC or the Local MMI.

5.6.4.2.14 On-Orbit Calibration

The TT&C ADPE Subsystem requirements to support on-orbit calibrations are contained in STRs C-1, 2, 9, 14, 15 and ACS-16 and shall include the following:

a. Support the TOCC in calibrating the transmit and receive boresights of the SGL antenna.

1. Open-loop point the SGL antenna to provide scan patterns for calibration.

2. Record antenna position history during calibration.

b. Support the TOCC in calibration of the SA antennas to reduce open-loop pointing errors and the autotrack equipment.

1. Execute sweep patterns for determination of boresight biases.

2. Record and process gimbal history and autotrack error data.

c. Support the TOCC in evaluating the dominant bending mode of the TDRS SGL and SA antennas by pointing and stepping the antennas under TOCC or Local MMI commanding.

1. Slew/Track the antennas to the controlling ground terminal, and off-point the antenna.

2. Accept and transmit manual TOCC (Danzante and Cacique only) or Local MMI control commands for antenna stepping.

5.6.4.2.15 Antenna Position Determination

The TT&C ADPE Subsystem requirements to perform antenna position determination are specified in STR ACS-21, and shall include the following:

a. Compute the current estimate of gimbal position based on step commands.

b. Monitor the difference between the computed estimate of gimbal angles and the actual gimbal angles based on telemetry data, including the command counter values.

c. Alert the TOCC and the Local MMI whenever the difference exceeds a prespecified threshold.

d. Provide the gimbal step commands required to drive a gimbal to the nearest reference null.

e. Monitor null occurrence during null search and upon null occurrence perform the following:

1. Notify the TOCC and the Local MMI.

2. Update software estimates of the antenna's position using the first pot reading received following null occurrence.

f. Be capable of determining which command caused the null occurrence to within ± INTEGER (1 + m/2) steps, where m is the number of commands contained within the time uncertainty period of when the null reference occurred.

5.6.4.2.16 Antenna Null Search

The TT&C ADPE Subsystem shall:

a. Issue stepping commands to step the specified SGL or SA antenna towards a reference null position.

b. Automatically terminate gimbal stepping commands upon indication of reference null occurrence for that gimbal.

c. Select gimbal stepping rate based on telemetry bit rate.

d. Compute the predicted time of gimbal command execution for each gimbal command issue and save the time-tagged stepping command history.

e. Minimize structural resonance by issuing stepping commands in deadbeat pairs.

5.6.4.2.17 Antenna Pointing, Computation and Control

The TT&C ADPE Subsystem requirements to perform TDRS SGL Antenna control are specified in STR ACS-1, and shall include the following:

a. Generate look angles for pointing the TDRS SGL antenna at an operator specified group station.

b. Include in the look angle computation the TDRS-to-ground station vector, the TDRS attitude and the TDRS body-to-SGL gimbal transformation.

c. Provide gimbal commands to point the TDRS SGL antenna boresight at the specified ground station.

d. Limit gimbal stepping to a maximum tracking rate of plus or minus 6 steps/gimbal/execution.

e. Maintain time-tagged gimbal stepping history.

f. Minimize bending oscillations by issuing commands in deadbeat pairs.

g. The processing attributable errors contribution to the SGL pointing error shall be less than 0.026° to maintain an overall system pointing accuracy of ± 0.13°.

5.6.4.2.18 Open Loop SA Antenna Control (Ku-band Operations Only)

The TT&C ADPE Subsystem requirements to perform Open Loop SA Antenna control are specified in STR ACS-4, and shall include the following:

a. Compute the step commands for the TDRS SA Antenna gimbal drives in order to slew or track the SA antenna; each step rotates the antenna 0.0075°.

b. Generate the SA antenna slewing commands necessary to point the SA antenna to the customer spacecraft at time of service initiation.

c. Generate the SA antenna stepping commands necessary to open loop track the SSA customer spacecraft throughout the requested service duration.

d. Account for SA antenna gimbal limit modeling (unique for each SA antenna) and inhibit antenna commanding past pre-specified limits.

e. Minimize structural resonance by stepping the antenna with paired commands with pre-specified spacing.

f. Issue a maximum of 17 antenna stepping command messages per computational period (1.02 seconds).

g. Slew or track both SA antennas, either simultaneously or one at a time.

h. Prevent the individual gimbal drives from exceeding a maximum gimbal rate of 0.25°/sec.

i. The time to complete a slew of 26° or less shall be two minutes maximum. The time to complete a slew of 21° or less shall be 90 seconds maximum.

j. The time to complete a maximum slew angle of 66° is 5 minutes.

k. Maintain an SA antenna pointing error resulting from software processing of less than ± 0.026° to maintain an overall system accuracy of ± 0.22°.

5.6.4.2.19 SA Antenna Ku-band Autotrack (Ku-band Operations Only)

The TT&C ADPE Subsystem requirements to support SA Antenna Ku-band autotrack are specified below:

a. Process the KSA tracking error signals and status indications received from the KSA Autotrack Equipment.

b. Generate SA antenna stepping commands based on error signals and customer ephemerides for the pitch and roll gimbal drive assemblies for autotrack acquisition, pull-in and autotrack.

c. Determine the number of steps in a deadbeat set and the spacing between commands in the set so as to avoid resonances of the SA antennas and the solar arrays.

d. Within 10 seconds after autotrack acquisition, issue a TDRS command to change forward link signal power to normal/high level. (Normal and high power levels shall be database parameters selectable by the TOCC and the Local MMI).

e. Configure, control, and calibrate, as necessary, the KSA Autotrack signal acquisition function.

f. Whenever the KSA autotrack pointing vector (computed from the error signals) differs from the computed biased Program Track (Open loop pointing) pointing vector by more than 0.1°, revert to biased Program Track mode for pointing control. Reinitiate KSA autotrack acquisition. When the difference reduces to less than 0.1°, return to closed loop pointing. Notify the TOCC of the switch between open loop pointing and autotrack. Biases shall be computed as the difference between program track and the antenna position when the autotrack error signal changes sign and shall be ≤ 0.18°.

g. Minimize the need for frequent calibration of the KSA Autotrack signal acquisition function.

h. Account for SA antenna gimbal limits during antenna pointing and inhibit commanding of the antenna past prespecified limits.

i. Maintain KSA antenna autotrack closed loop accuracy of 0.06° circular pointing error from the peak of the received main beam.

j. Provide KSA autotrack support only when scheduled (530-ICD-NCC-FDF/WSC).

k. Provide autotrack status for ODMs to the Executive ADPE.

5.6.4.2.20 KSA Autotrack Phase Shift Compensation (Ku-band Operations Only)

The TT&C ADPE Subsystem requirements to command KSA Autotrack phase shift compensation are specified in STR ET-25, and shall include the following:

a. Generate command sequences consisting of six commands to set the four commandable phase shifters (two per SA antenna) in the TDRS in order to maintain proper autotrack error signal phase.

b. Provide the command sequences for transmission to TDRS once every 15 minutes to each phase shifter commencing at the beginning of KSA service and ending at the end of KSA service.

c. Provide the first command sequence within the five minute interval prior to the start of KSA service.

d. The command sequence shall be as specified below:

   1. Words 1, 2 - Power Up.
   2. Word 3 - Phase Reset.
   3. Word 4 - Phase Set.
   4. Words 5, 6 - Power Down.

Words one and two shall be separated by at least one second. Words three and four shall be separated by more than 500 msec and less than 1000 msec. Words five and six shall be separated by at least one second.

e. The computation shall employ calibration data of phase shift versus temperature and telemetered temperature data in order to orientate the pitch and roll autotrack error signal vectors to be as close to an in-phase condition with the sum signal as possible.

5.6.4.2.21 SGLT Ground Antenna Control and Coordination

The TT&C ADPE Subsystem requirements to support SGLT ground antenna control and coordination are specified below:

a. Coordinate with the Antenna Subsystem the antenna control modes specified below:

   1. Open Loop ADPE Control.
   2. Program Spatial Scan (Ku-band operations only).

3. Autotrack (Ku-band operations only).

4. TOCC and Local Control Panel manual control.

5. Hand Crank Mode.

6. Remote Control Box Control.

b. Coordinate pointing mode operation by releasing TT&C ADPE Subsystem control of the antenna upon recognition that the Antenna Control ADPE/manual switch is in the manual position. The switch shall be interrogated once per second.

c. The third SGLT TT&C ADPE subsystem at Danzante shall release control of the third SGLT Antenna Subsystem at Danzante when required to support one-for-two redundancy of either the first or second SGLT Antenna Subsystems at Danzante or one-for-one redundancy of the S-band TT&C Antenna Subsystem at Danzante.

d. Under ADPE operation, support the SGLT antenna in one of three modes.

1. Open Loop ADPE Control. Control the ground antenna pointing via open loop control. The pointing accuracy requirements of Section 5.2.3.5.1 shall apply.

2. Program Spatial Scan (Ku-band operations only). Initiate an antenna search to locate the assigned TDRS and automatically transfer to autotrack upon receiving a usable signal.

3. Autotrack (Ku-band operations only). Control the ground antenna pointing via closed-loop control. The pointing requirements of Section 5.2.3.5.3 shall apply.

e. Control antenna polarizer rotation (Section 5.2.3.2) to align the SGLT antenna polarization with the incoming signal polarization (Ku-band operations only).

f. Receive performance and equipment status information from the Antenna Subsystem that include:

1. Antenna Azimuth Angle Readout.

2. Antenna Elevation Angle Readout.

3. Polarization Angle Readout.

4. ADPE/Manual Modes (Pointing and Polarization).

5. Autotrack Lock Status (Ku-band operations only).

g. Command the antenna at a rate which is consistent with the angular dynamic capability of the antenna as specified in Section 5.2.

h. Control calibration of the SGLT Antenna Subsystem, as necessary, to provide the RF boresight pointing accuracy stated in Section 5.2.3.5.1.

5.6.4.2.22 SGLT Ground Antenna Polarization Alignment (Ku-band Operations Only)

The TT&C ADPE Subsystem requirements to support SGLT Antenna Polarization Alignment are specified in STR H-9 and shall include the following:

a. Compute the amount (angle) by which the SGLT antenna must be rotated in order to line up with the incoming polarization, accounting for orbital motion, TDRS attitude and SGLT equipment bias.

b. Provide the polarization alignment angle to the Antenna Subsystem as required to maintain the polarization alignment requirements of Section 5.2.3.1.

c. Calculate the polarization alignment angle to an accuracy of 0.1° or better.

5.6.4.2.23 TDRS Setup Commands for Customer Service (Ku-band Operations Only)

The TT&C ADPE Subsystem requirements to support TDRS setup for customer service are specified in STR TOS-1, and shall include the following:

a. Generate the following commands in accordance with the scheduled service:

   1. Right-hand circular polarization/left-hand circular polarization (RCP/LCP) selection of coaxial (SSA) and waveguide (KSA) switches.

   2. Forward Processor Pin Diode Attenuator control (serial command interface).

   3. Forward SSA Synthesizer frequency command (serial command interface).

   4. Return SSA Synthesizer frequency command (serial command interface).

b. Support TOCC initiated commands required for initial TDRS configuration or for redundancy following on-orbit failure.

5.6.4.2.24 SSA TDRS Tuning (Ku-band Operations Only)

The TT&C ADPE Subsystem requirements to support SSA TDRS tuning are specified in STR SU-6, and shall include the following:

a. Generate TDRS tuning commands to accommodate a Customer return frequency range of 2025.8 MHz to 2117.9 MHz and a customer transmit frequency range of 2200 MHz to 2300 MHz.

b. Accomplish the tuning in the assigned TDRS to the nearest half megahertz in TDRS.

c. Accomplish residual tuning in the SGLT.

d. Compute and transmit to the assigned TDRS once prior to the start of each SSA service.

e. Recalculate and transmit to the assigned TDRS the tuning parameters if a customer reconfiguration OPM is received which changes an SSA customer's forward and/or return link frequencies.

f. Generate TDRS tuning commands to accommodate the interservice frequency of 2030 MHz.

5.6.4.2.25 Return Processor PIN Diode Attenuator Control (Ku-band Operations Only)

There are no TT&C ADPE Subsystem requirements to support Return Processor PIN Diode Attenuator control. This capability is required infrequently and is handled by an operations procedure.

5.6.4.2.26 Forward Processor PIN Diode Attenuator Control (Ku-band Operations Only)

The TT&C ADPE Subsystem requirements to support Forward Processor PIN Diode Attenuator (PDA) control are specified in STR H-14, and shall include the following:

a. Automatically select PDA power settings corresponding to the following forward channel modes:

   1. SSA.

      (a) High Power.

      (b) Normal Power.

   2. KSA.

      (a) High Power/Acquisition.

      (b) Normal Power.

b. Transmit the PDA command settings specified in Item a. automatically as required by customer service requests.

c. Permit on-line adjustments of the above automatic mode power settings.

d. Provide the necessary offset and adjustment in each channel output power to maintain the minimum specified EIRPs over the S/C lifetime and the forward processor temperature environment.

e. Provide TOCC capability to manually adjust the power output of all forward processor channels.

5.6.4.2.27 TDRS Propellant Utilization Evaluation

The TT&C ADPE Subsystem requirements to perform TDRS Propellant utilization are specified in STR SW-1, and shall include the following:

a. Compute the propellant mass remaining in the assigned TDRS from telemetry inputs of pressure and temperature.

b. For each requested maneuver plan, calculate the required propellant expenditure.

c. Perform the computation in Item a. after every burn.

d. Perform the computation in Item b. as part of the maneuver planning computation (Section 5.6.4.2.9).

5.6.4.2.28 Pre-Service Processing and Setup (Ku-band Operations Only)

The TT&C ADPE Subsystem shall:

a. Receive scheduling data and operations messages from the Executive ADPE Subsystem or from operator input via the TOCC and the Local MMI.

b. From the schedule data and operations messages, determine TDRS, TTCS, and KSA autotrack equipment configurations.

c. Initiate processing of the commands and values needed to initiate and maintain service operations.

d. Initiate the generation of the data to configure the TDRS (e.g., SA RCP/LCP polarization selection, forward PIN diode attenuation, forward and return SA synthesizer frequencies).

e. Initiate the generation of SA antenna slewing commands for service support.

f. Generate commands to configure and control TTCS equipment, and Prime/Hot-Standby and test mode switching.

5.6.4.2.29 Customer Service Link Operation Support (Ku-band Operations Only)

The TT&C ADPE Subsystem shall coordinate with other ADPE Subsystems, as necessary, to support:

a. Link Equipment Configuration and Setup. Send commands to the SGLT ground antenna, to the KSA autotrack equipment, and to the assigned TDRS for configuration.

b. Link Initiation. Command the TDRS SA antenna pointing, and control the forward link acquisition EIRP and the KSA autotrack equipment.

c. Link Operation. Command the TDRS SA antenna, support KSA autotrack equipment, and provide configuration and service status.

d. Link Reacquisition and Reconfiguration Coordination.

   1. If applicable, initiate/terminate KSA Autotrack for link reacquisition or KSA Autotrack enable/disable reconfiguration.

   2. If applicable, command TDRS for:

      (a) Forward EIRP adjustments.

      (b) SA Antenna polarization changes.

      (c) Forward link frequency adjustments.

e. Service Termination. Set TDRS transmission EIRP to maximum attenuation for interservice period if termination is for an SA forward service.

5.6.4.2.30 Solar Array Pointing

The TT&C ADPE Subsystem shall support Solar Array pointing by generating pointing commands for the solar arrays.

5.6.4.2.31 RAM Hit/Dump and Compare

The TT&C ADPE Subsystem requirements to support Random Access Memory (RAM) hit/dump and compare are specified in STR ACS-6, and shall include the following:

a. Detect RAM errors.

   1. Check values of key telemetered RAM parameters.

   2. Check checksum of TDRS RAM dumps.

   3. Declare a RAM-hit if the above checks fail for two consecutive occurrences in the telemetry.

b. RAM Dump Capability.

   1. Receive and extract RAM dump telemetry.

   2. Support the display of those telemetered values along with the display of the baseline values.

   3. Identify differences between the telemetry and baseline values.

   4. Be capable of processing up to 256 bytes of TDRS RAM.

c. Automatic Command Generation for RAM Correction.

   1. Provide automatic command sequencing for RAM recovery with operator override.

   2. Worst case correction time shall be less than 90 seconds.

d. Provide the specified detection and correction capability for all modes of TDRS attitude control.

5.6.4.2.32 TDRS ETO Alert and Recovery

The TT&C ADPE Subsystem requirements to support ETO Alert and Recovery are described in STR ACS-7 dated 22 Oct 90 and shall include the following:

a. Monitor SGL uplink and downlink to determine TDRS Emergency Time Out (ETO) state and to detect incorrect satellite identification.

b. Provide ETO alert notification and software processing control to the TOCC or the Local MMI.

c. Inhibit command transmissions during ETO critical periods.

5.6.4.2.33 Operations Message Handling

The TT&C ADPE Subsystem shall:

a. Receive from the Executive ADPE Subsystem and appropriately process the operations messages that include:

   1. Forward Link EIRP Reconfiguration Request (Ku-band operations only).
   2. Spacecraft State Vector.
   3. TDRS Maneuver Approval.
   4. Emergency Spacecraft State Vectors.
   5. Δt Adjustment (Ku-band operations only).

b. Provide to the Executive ADPE Subsystem the following operations message:

   1. TDRS Maneuver Request.

5.6.4.2.34 Special Equipment Interfaces

The TT&C ADPE Subsystem shall support the equipment interfaces between the TT&C ADPE Subsystem and the following equipment:

a. Command Encoder.
b. Telemetry Receiver/Assembly.
c. Range Unit.
d. SGL Ground Antenna.
e. KSA Autotrack Equipment (Ku-band operations only).
f. Command Echo Return Chain.
g. PMM Test Equipment.
h. S-band TT&C Antenna Subsystem (Danzante third TT&C ADPE subsystem only)

5.6.4.2.35 TTCS Ground Equipment Control

The TT&C ADPE Subsystem shall coordinate ground equipment configuration requests initiated by TOCC, by the Local MMI or by TT&C processing functions. The TT&C ADPE Subsystem shall:

a. Accept and coordinate requests from the TOCC and the Local MMI that include:

   1. Command encryption, command echo decryption, and telemetry decryption control.
   2. Start pilot tone frequency sweep (Ku-band operations only).
   3. Start command frequency sweep.

4. Output power control.
5. Start range acquisition.
6. Start range self-test.
7. Ground antenna commands.
8. Maintenance switching (including any commands necessary to prepare equipment for release to maintenance).
9. Telemetry data rate selection.

b. Accept and coordinate requests from TT&C processing functions that include:

1. Stop pilot frequency sweep (Ku-band operations only).
2. Stop command frequency sweep.
3. Ground antenna commands.
4. KSA autotrack equipment control (Ku-band operations only).
5. EET EIRP calibration.

5.6.4.2.36 Provide Local Control Mode Support

During local control mode the functions listed in Paragraph 4.5.2.c shall be supported.

a. The following customer and TDRS support functions shall be provided:

1. Allocation of the TDRS, Spare 19-meter antenna (Danzante and Cacique only), EET antenna, and SGLT service chains.
2. Initiation and termination of TDRS telemetry collection.
3. Initiation and termination of command processing.
4. Configuration of equipment to use a GSTDN station antenna.
5. Reservation of equipment for maintenance and testing.
6. Cancellation of a customer or TDRS support service (Ku-band operations only).

b. Initiation of the operations messages listed below shall be supported (Ku-band operations only).

1. OPM 03 - Reconfiguration (except for cross support services and DQM, max/min EIRP and G2 Inversion parameters).
2. OPM 12 - Cancel SHO.

5.6.4.2.37 TOCC Workstation Support

The TT&C ADPE Subsystem support of the TOCC shall include the following:

a. Provide to the TOCC workstations all data required by the TOCC for control and monitoring of the functions in Section 5.6.4.2.

b. Provide real-time TDRS telemetry to the TOCC workstations for operator-selected parameter display.

5.6.4.2.38 TTCS Performance Monitoring and Measuring

In support of TTCS Performance Monitoring and Measuring (PMM), the TT&C ADPE Subsystem shall receive equipment and service performance status data, shall perform command verification via the Command Echo Return chain, and shall control diagnostic testing of the TTCS.

5.6.4.2.38.1 Monitoring and Reporting

Both the prime and redundant TT&C ADPE Subsystems shall perform the following functions for their associated TT&C equipment chains:

a. Receive configuration and equipment and service performance status data from the TT&C ground equipment every second and from the PMMS ADPE Subsystem every five seconds. These parameters shall include those specified in Section 5.4.3.11.

b. Validate TDRS commands received via the Command Echo Return chain with the transmitted commands and alert the TOCC if validation fails.

In addition, the TT&C ADPE subsystem shall provide control and monitoring of the associated SGLT antenna subsystem.

5.6.4.2.38.2 Logging/Archiving/Delogging

Logging, Archiving and Delogging requirements shall be as specified in Section 5.6.1.1.1 except the S-band TT&C does not have to notify the Executive ADPE of failure to receive status data, performance data, status changes or threshold violations. S-band TT&C logging shall include the following:

a. Log status monitoring and performance measurement data (Section 5.6.4.2.38.1) at one second intervals.

b. Log TDRS telemetry.

c. Log TDRS commands, echoes, and verification results.

5.6.4.2.38.3 Testing and Maintenance

During non-critical periods, the TT&C ADPE Subsystem shall allow the redundant equipment chain to be available for testing, maintenance, and software delivery as specified below. In the event that the prime equipment chain fails and the redundant equipment chain becomes operational, the failed equipment chain shall be made available for testing and maintenance.

During non-critical TT&C support or in the event of an equipment chain failure, the prime TT&C ADPE Subsystem shall perform the following functions on the redundant equipment chain:

a. Configure the telemetry downlink equipment chain and the PMM test equipment (Section 5.4.3.10) for diagnostic chain testing.

b. Support test telemetry and range data generation, as necessary, for injection into the telemetry equipment chain.

c. Support, as necessary, the comparison of the processed telemetry stream and range data with the test telemetry and range data.

d. Perform Items a., b., and c. with the test MYK-5 encryptor output connected to the MYK-5 decryptor input.

e. Configure the command uplink equipment chain for diagnostic testing.

f. Provide test command data to the command uplink equipment chain for processing via the Command Echo Return chain.

g. Compare the processed command data received via the Command Echo Return chain with the test command data.

h. Perform Items e., f., and g. with the MYK-5 encryptor output connected to the MYK-5 decryptor input.

i. Provide test results to the TOCC.

5.6.4.2.38.4 TOCC Support for PMM

The TT&C ADPE Subsystem shall receive and process requests from the TOCC to perform the following functions:

a. Initiate testing and maintenance on a failed equipment chain or redundant equipment chain.

b. Terminate testing on redundant equipment chain and configure the equipment chain for operations.

c. Release equipment for maintenance.

5.6.4.2.39 GSTDN Support

The TT&C subsystem shall support TDRS operations by utilizing the Command and Telemetry capabilities of the GSTDN. All capabilities provided by the TT&C subsystem, except ranging, command echo, and customer support, shall be provided when utilizing the GSTDN. The system shall have the capability of utilizing any GSTDN station by providing the appropriate destination/source code at the WSC.

5.6.4.2.39.1 GSTDN Checkout

The TT&C subsystem shall have the capability of utilizing the same TT&C subsystem that is actively supporting a TDRS vehicle, to perform a GSTDN pre-support checkout by sending test commands to, and receiving test telemetry from the selected GSTDN station. This checkout capability shall be operator requested, and initiated within one minute of operator input.

5.6.4.2.39.2 Initiation of Active GSTDN Support

After completion of the GSTDN checkout, the operator shall have the manual capability of terminating the WSC RF command uplink, and by utilizing the telemetry from, and sending commands to the GSTDN station, control the TDRS vehicle. This capability shall be provided within 10 seconds of operator input.

5.6.4.2.40 TDRS Handover

Support shall be provided for handovers of in-view TDRSs between any SGLT and between the S-band TT&C (Danzante and Cacique only) and any SGLT. The support shall include operations procedures and software to transfer all data required to accomplish the TDRS handover and restore customer services on the TDRS. Customer service schedules (SHOs) shall not be retained. A new service schedule for the affected TDRS will be provided from the NCC. The handover and restoration of customer services shall be accomplished in less than one hour. The data transferred in support of a TDRS shall include:

a. SA and SGL antenna gimbal positions,

b. Fine sun sensor calibration coefficients,

c. Disturbance torque coefficients,

d. Historical data (minimum of 24 hours) used in determining disturbance torques and fine sun sensor coefficients,

e. Yaw estimator state matrix, and

f. TOCC Updatables.

5.6.4.2.41 MA Service Support

The TT&C ADPE subsystem shall support MA services by configuring the TDRS spacecraft for MA service support and by generating the phase shift commands for the TDRS MA transmit antenna to point the beam at the scheduled MA customer. The TT&C ADPE subsystem shall:

a. Receive MA service schedule requests from the Executive ADPE subsystem.

b. Calculate TDRS-to-Customer pointing-angle profile.

c. Calculate the phase-shift commands for the MA antenna transmit elements to point the beam at an MA customer. STR ET-13 shall be used to implement MA Forward beam

forming, except for the reference to STR C-6. The Phase Correction Factors referred to in STR C-6 are measured once during on-orbit testing, and are maintained in a TOCC updatable data base.

d. Using real-time TDRS attitude data and precalculated TDRS-to-Customer spacecraft pointing-angle data, correct antenna-pointing errors.

e. Output pointing commands every 20 seconds.

f. Maintain a pointing accuracy of ± 1.1 degrees or better.

g. Track the MA customer spacecraft by calculating updates to the phase-shift commands for the MA antenna transmit elements.

5.6.4.3 Interface Requirements

In addition to the LAN Interface, the TT&C ADPE Subsystem shall have the following interfaces.

a. Interface with TTCS. Each TT&C ADPE Subsystem shall have independent interfaces with the prime and redundant TT&C equipment chains as indicated in Figure 5-38.

b. Interface with Antenna Subsystem. Each TT&C ADPE Subsystem shall have interfaces with the Antenna Subsystem as indicated in Figures 5-2, 5-3 and 5-4.

c. Interface with USS. Each TT&C ADPE Subsystem shall have independent interfaces with the prime and redundant USS KSA autotrack equipment as indicated in Figure 5-32 (Ku-band operations only).

d. Local MMI Interface. Each prime/redundant pair of TT&C ADPE Subsystems shall have an operator MMI, including a video display unit (VDU) and keyboard, to provide local control capabilities. The Local MMI interface shall provide for the functional requirements of Section 5.6.4.2.36.

5.6.5 PMM ADPE Subsystem

5.6.5.1 Overview and Architecture

The PMM ADPE Subsystem shall generate USS pre-service verification test and post-maintenance acceptance test schedules; collect and monitor USS equipment status, service quality, and test results from the USS ADPE Subsystem and PMMS; coordinate and control PMMS equipment; log/delog performance data; and generate test and status reports. Figure 5-39 shows a PMM ADPE Subsystem reference architecture and identifies the interfaces.

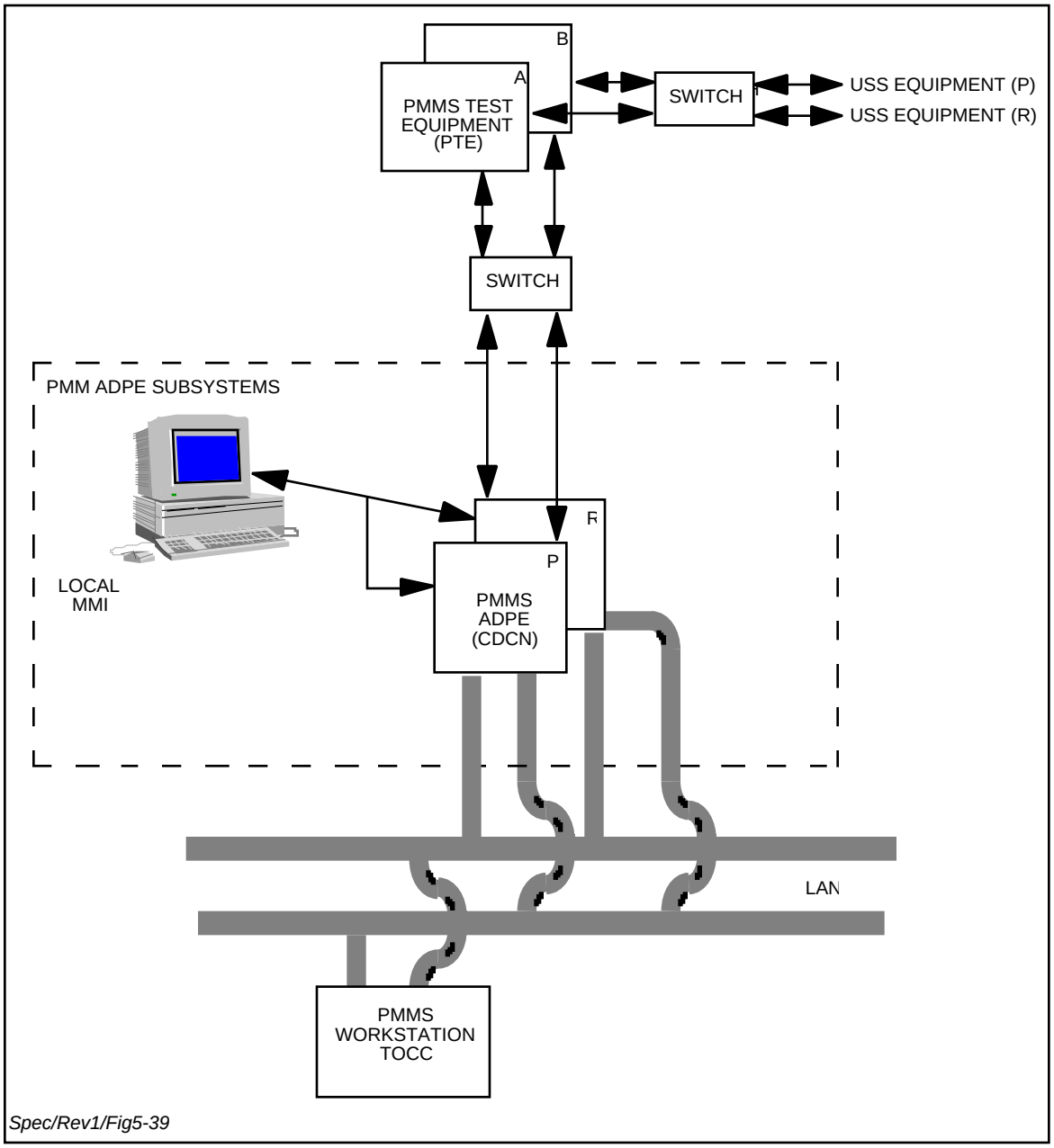

Figure 5-39. PMM ADPE Subsystem Reference Architecture

5.6.5.2 Functions

The PMM ADPE Subsystem shall perform the following functions:

a. Test schedule planning.

b. PMMS equipment configuration control.

c. Performance data, equipment status, and test results monitoring.

d. Performance data, equipment status, and test results logging/delogging and report generation.

e. TOCC support.

5.6.5.2.1 Test Schedule Planning

The schedule planning function shall provide conflict-free test schedules for use of PMMS equipment based on customer schedule data from the Executive ADPE Subsystem, PMMS equipment availability, and operator inputs from the TOCC or Local MMI. The PMMS equipment, the types of pre-service verification tests, and the types of post-maintenance acceptance tests are functionally defined in Section 5.5.2.

5.6.5.2.1.1 Pre-Service Verification Test Schedule Generation

The PMM ADPE Subsystem shall perform as a minimum the following functions to support pre-service verification test schedule generation:

a. Receive the customer schedule data from the Executive ADPE Subsystem.

b. Generate pre-service verification test schedules based on:

   1. Customer schedule data. For Shuttle, verify all forward and return modes at S-band and Ku-band.

   2. PMMS equipment availability.

c. Store pre-service verification test schedules.

d. Inform the TOCC if a pre-service verification test cannot be scheduled and provide the reason for the inability to schedule the pre-service verification test.

e. Update pre-service verification schedules in accordance with customer schedule data updates.

f. Forward pre-service verification test schedules to the designated USS ADPE Subsystem prior to the pre-service verification test start time. Inform the TOCC operator if the pre-service verification test schedule is rejected and provide the reason for rejection.

5.6.5.2.1.2 Post-Maintenance Acceptance Test Schedule Generation

The PMM ADPE Subsystem shall provide the TOCC operator or the Local MMI with the capability of generating post-maintenance acceptance test schedules manually. The PMM ADPE Subsystem shall:

a. Perform validity checks on operator requests. Checks shall be based on:

   1. Conflict with customer schedule data and pre-service verification test schedules.

   2. The PMMS equipment availability.

b. Inform the TOCC operator or Local MMI if the operator-generated post-maintenance acceptance test schedule fails the validity checks and provide the reason for failure.

c. Provide the TOCC operator and Local MMI with the capability of overriding pre-service acceptance test schedules.

d. Store the post-maintenance acceptance test schedule.

e. Forward the post-maintenance acceptance test schedule to the designated USS ADPE Subsystem prior to the post-maintenance acceptance test start time.

5.6.5.2.2 PMMS Equipment Configuration Control

The PMM ADPE Subsystem shall:

a. Generate all PMMS equipment setup and control configuration required for pre-service verification testing, post-maintenance acceptance testing, and manual control.

b. Transmit the PMMS equipment setup and control configuration at the scheduled or operator-designated time.

c. Inform the Executive ADPE Subsystem and TOCC of pre-service verification test of post-maintenance acceptance test start, stop, and status.

5.6.5.2.3 Performance Data, Equipment Status and Test Results Monitoring

The PMM ADPE Subsystem shall monitor ongoing service performance, pre-service verification test and post-maintenance acceptance test results, and equipment status indications produced by the USS BIT/BITE and PMMS. The PMM ADPE Subsystem shall receive, process and store these data.

The PMM ADPE Subsystem shall process all SGLT performance data, equipment status and test results. When an anomalous condition occurs, the PMM ADPE Subsystem shall notify the TOCC or Local MMI and provide a description of the condition. The PMM ADPE Subsystem shall support PMMS in performing fault isolation.

5.6.5.2.3.1 Service Performance Monitoring

The PMM ADPE Subsystem shall monitor the quality of ongoing services in order to identify degraded or interrupted service. The PMM ADPE Subsystem shall:

a. Receive ongoing service performance data from the USS ADPE Subsystem.

b. Check performance data limits.

c. Log the performance data, associated time-tags, and limit check failures.

d. Inform the TOCC and Local MMI when performance data fails the limit checks.

e. Send dynamic service performance data for display at the TOCC and Local MMI.

5.6.5.2.3.2 Test Results Monitoring

The PMM ADPE Subsystem shall monitor pre-service verification test data and post-maintenance acceptance test results. The PMM ADPE Subsystem shall:

a. Receive during-service, pre-service verification test data and post-maintenance acceptance test results from the USS ADPE Subsystem and PMMS.

b. Log and store the test results summary.

c. Perform test results limit checks.

d. Inform the TOCC and Local MMI when the test results fail limit checks.

e. Display dynamic test results updates at the TOCC or Local MMI, upon TOCC or Local MMI request.

f. Generate and forward to the TOCC or Local MMI a test result summary after the scheduled test termination time.

g. Retrieve and display test result history upon TOCC or Local MMI request.

5.6.5.2.3.3 Equipment BIT/BITE Status Monitoring

The PMM ADPE Subsystem shall receive and monitor the USS equipment BIT/BITE status from the USS ADPE Subsystem and shall receive and monitor the PMMS equipment status. The PMM ADPE Subsystem shall:

a. Receive BIT/BITE status data.

b. Perform BIT/BITE status data limit checks.

c. Log the BIT/BITE status data, the associated time-tags, and failure of limit checks. Inform the TOCC or Local MMI of limit check failures.

d. Evaluate the status of USS and PMMS equipment.

e. Update USS and PMMS equipment status databases.

5.6.5.2.3.4 Fault Isolation Support

The PMM ADPE Subsystem shall support operation and maintenance personnel in isolating USS equipment faults. The PMM ADPE Subsystem shall:

a. Initiate PMMS fault isolation diagnostics and scenarios under operator control.

b. Correlate the performance and status data with diagnostics.

c. Display to the TOCC or Local MMI the probable cause(s) of the fault and recommended operator actions.

d. Provide the operators with the capability of updating the fault knowledge database.

5.6.5.2.4 Performance Data, Equipment Status and Test Results Logging/ Delogging, and Report Generation

The PMMS shall provide WSC operational and maintenance personnel with information on service quality and the quantity of service provided to the customers, USS and TT&C subsystem

equipment performance history and trend analysis, and other reports needed to support WSC/SGLT operations and maintenance.

5.6.5.2.4.1 Logging/Archiving/Delogging

The PMM ADPE Subsystem shall:

a. Maintain a log of all data related to SGLT service support, USS/PMMS/TT&C equipment failure history, and maintenance records. These data shall include, but not be limited to:

   1. Time of initiation, interruption and termination of a service.

   2. Time of an equipment failure, start-time for maintenance, and time at which the equipment is returned to operational readiness.

b. Log appropriate data base information which as a minimum shall include: Customer Support Identifiers (SUPIDEN), time period, service type, and equipment identification.

c. Have a logging interval rate as required but no less frequently than every 10 seconds.

d. Provide sufficient storage media to log the specified data for a period of 5 hours.

e. Have a delogging capability which, in addition to that specified in Section 5.6.1.1.1, shall include:

   1. Delogging based on data type which as a minimum shall permit delogging by: SUPIDEN, time period, service type, and equipment identification.

   2. Report generation in hardcopy output or TOCC displays to support the WSC maintenance and operations activity.

5.6.5.2.4.2 Report Generation

The PMM ADPE Subsystem shall be capable of generating reports from logged data, in hardcopy output or TOCC displays, to support WSC maintenance and operations activity.

5.6.5.2.5 TOCC/Local MMI Support

The PMM ADPE Subsystem shall support operations and maintenance personnel in:

a. Manually entering PMMS equipment control commands and initiating test sequences.

b. Displaying menus, equipment and service performance status and trend history, fault causes and recommended actions, and fault scenario databases.

c. Updating the fault knowledge database.

d. The use of the MMI for maintenance and fault isolation on redundant equipment chains shall not interrupt on-going services.

5.6.5.3 Interfaces

In addition to the LAN interface, the PMM ADPE Subsystem shall have the following interfaces.

a. Service Bus Interface. Each PMM ADPE Subsystem shall interface via a service bus with the PMMS equipment as illustrated in Figure 5-34. The service bus shall comply with the requirements of Section 5.6.1.2.2.

b. Man Machine Interface (MMI). Each prime/redundant pair of PMM ADPE Subsystems shall have an operator MMI including a video display unit (VDU) and keyboard, to provide local control and monitoring capabilities.

5.7 End-to-End Test (EET) Capability

5.7.1 EET Overview and Architecture

5.7.1.1 Purpose

EET capability shall be provided within each SGLT for the purpose of testing the end-to-end TDRSS Network (TN) data communications functions between customer MOC and customer spacecraft without the use of actual customer spacecraft.

5.7.1.2 EET Architecture

EET capability shall provide means for receiving TDRS-to-customer spacecraft signals at each Ground Terminal and for transmitting customer spacecraft-to-TDRS signals from each Ground Terminal. The EET equipment shall include a dedicated dual band EET antenna, S- and K-band HPAs and S- and K-band LNAs. The EET antenna at GRGT shall be enclosed in a radome with requirements as specified in Table 5-6, items d, i, j and k.

A simplified reference architecture for end-to-end testing is shown in Figure 5-40. The EET capability shall require as a minimum, in addition to USS equipments, the following:

a. KSAF downconverter.

b. KSAR upconverter.

c. KSAR HPA.

d. SSAF/MAF downconverter.

e. SSAR/MAR upconverter.

f. SSAR/MAR HPA.

g. EET Dual Band Antenna.

h. KSAF LNA.

i. SSAF/MAF LNA.

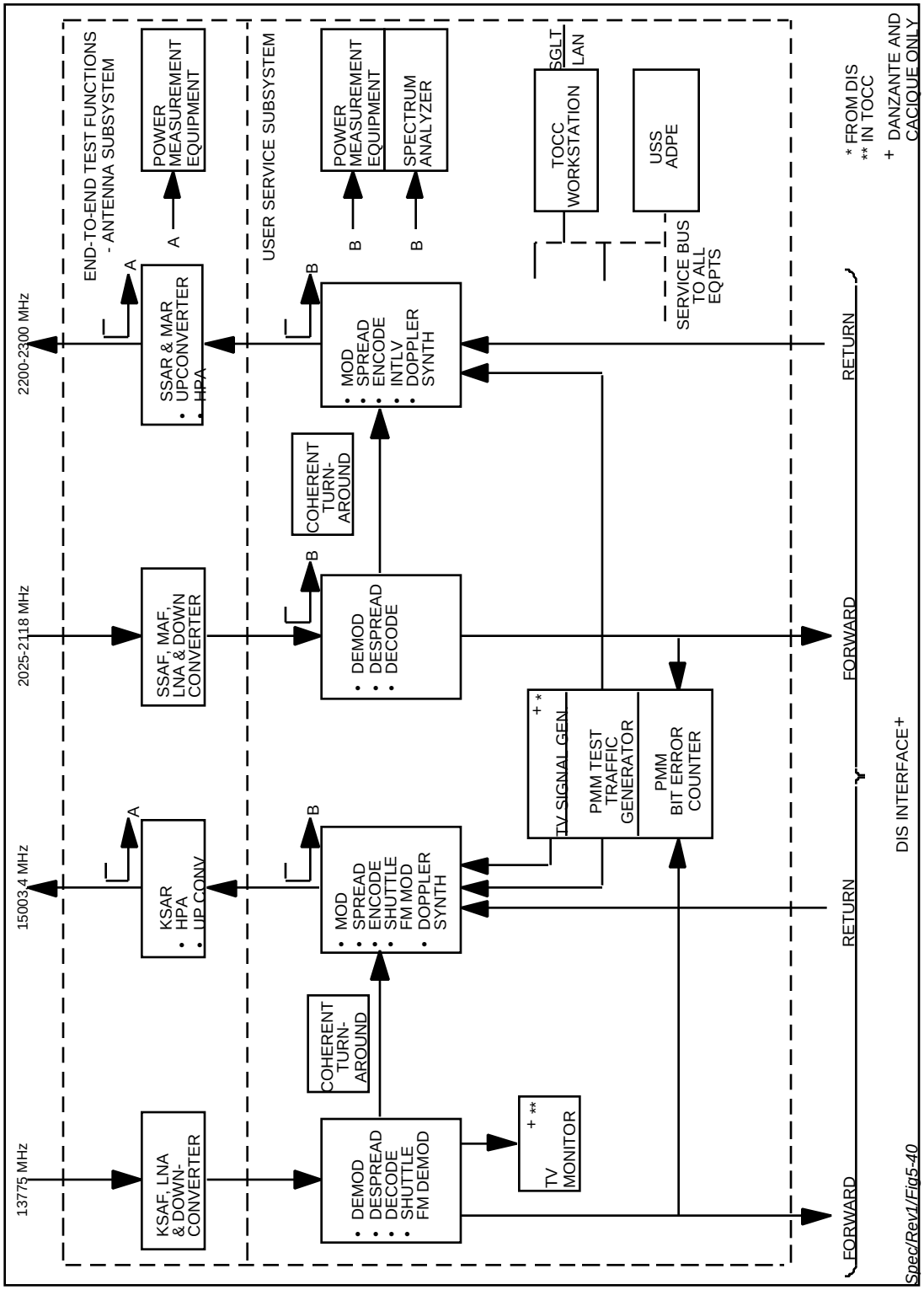

Figure 5-40. EET Equipment Reference Architecture (One Per SGLT)

5.7.2 Functional Requirements

End-to-end testing shall be capable of performing the following functions:

a. Simultaneous end-to-end testing of forward, return, and tracking services for one SSA or one MA and one KSA customer, including Shuttle. Shuttle EET services (S-Forward, S-Return, K-Forward, K-Return) shall not be required simultaneously.

b. Routing of received forward test data streams to the DIS (Danzante and Cacique only).

c. Transmission of return test data streams received from the DIS (Danzante and Cacique only).

d. Operation over a representative range of the following customer characteristics:

   1. EIRP.

   2. G/T.

e. Tuning of S-band receiver across the entire S-band range.

f. Tuning of S-band transmitter across the entire S-band range.

g. Performing necessary frequency translations.

h. Sending periodic EET equipment status messages to the Ku-band TT&C ADPE via the Ku-band TT&C service bus.

i. Reconfiguration of EET equipment in response to Ku-band TT&C ADPE control via the Ku-band TT&C service bus.

j. EET antenna EIRP calibration.

5.7.3 Performance Requirements

The EET capability shall meet the following performance requirements:

a. S-band transmitter tuning range: 2200-2300 MHz.

b. S-band maximum EIRP (circular polarization): $\geq$ 45 dBW.

c. S-band receiver tuning range: 2025-2118 MHz.

d. S-band maximum G/T: $\geq$ -10 dB/°K.

e. K-band transmitter frequency: 15,003.4 MHz.

f. K-band maximum EIRP (circular polarization): $\geq$ 60 dBW.

g. K-band receiver frequency: 13,775 MHz.

h. K-band maximum G/T: $\geq$ 21 dB/°K.

i. RF Performance parameters shall be as specified in Table 5-1 of TDRSS System Design Report, Volume I: System Design 29000-200-003-004.

5.7.4 Interfaces

The EET equipment shall have the following interfaces:

a. RF interfaces with an assigned TDRS.

b. USS Baseband interfaces with DIS (Danzante and Cacique only).

c. EET IF interfaces with USS.

d. Control and status interfaces with Ku-band TT&C ADPE via service bus.

5.7.5 Operations Requirements

The operation of the EET capability shall be as follows:

a. End-to-end testing shall employ USS and DIS (Danzante and Cacique only) equipment and the EET equipment under control of the Ku-band TT&C ADPE Subsystem for performing loop tests via TDRS as follows:

   1. PMM forward service test data via USS and TDRS to PMM bit error counter and MOC (Danzante and Cacique only) if requested.

   2. PMM return service test data via TDRS and USS to PMM bit error counter and MOC (Danzante and Cacique only) if requested.

   3. Customer MOC forward test data via DIS, USS, EET, TDRS, EET, USS, and DIS to Customer MOC (Danzante and Cacique only).

   4. Customer MOC return test data via DIS, USS, EET, TDRS, EET, USS, and DIS to Customer MOC (Danzante and Cacique only).

   5. Loop tests in support of fault isolation to either space or ground equipment.

   6. Tape Playback return service test data via USS, EET, TDRS, EET, USS and DIS to Customer MOC (Danzante and Cacique only).

b. Scheduling of loop tests via TDRS shall be originated by NCC or by TOCC or by USS ADPE on a non-conflicting basis.

c. Loop tests via TDRS shall not be supported if such tests could cause harmful interference to customer services provided by the same TDRS.

d. Loop tests via TDRS shall be aborted in the event of an ETO.

e. An EET antenna shall be provided to point to each of the following TDRS orbital locations:

   1. From 37° W longitude to 115° W longitude, eastern quadrant (Danzante and Cacique only).

   2. From 97° W longitude to 175° W longitude, western quadrant (Danzante and Cacique only).

3. From 37° W longitude to 175° W longitude, full-view (Danzante only).

4. From 142° W longitude to 289° W longitude (GRGT only).

f. The following switching capabilities between the SGLTs and the EET antenna at Danzante and Cacique shall be provided:

1. Connect the first SGLT to an EET antenna with eastern quadrant visibility and the second SGLT to an EET antenna with western quadrant visibility.

2. Connect the first SGLT to an EET antenna with western quadrant visibility and the second SGLT to an EET antenna with eastern quadrant visibility.

g. The EET antenna with full-view visibility at Danzante shall be dedicated to the third SGLT and slaved to the third SGLT antenna.

h. In order to mitigate interference between the S-band EET downlink (TDRS Forward Service) and S-band TDRS command operation, filtering in the EET System shall be provided in a 10 MHz band centered at 2036 MHz. The filter shall have an insertion loss of less than or equal to 3 dB at 2031 MHz and 2041 MHz and an insertion loss greater than or equal to 45 dB at 2036 Mhz.

i. The GRGT EET antenna shall be dedicated to the GRGT SGLT and slaved to the GRGT SGLT dual-band antenna.

Section 6. S-band TT&C System (STTCS)

6.1 Overview and Architecture

6.1.1 General

The STTCS shall provide TT&C support to TDRSs in the event of SGLT Ku-band TT&C or TDRS contingencies. These contingencies include Emergency Time Out (ETO), malfunction of TTCS equipment, or of Ku-band TT&C ADPE Subsystem, and unexpected TDRS attitude or position changes. The STTCS shall be provided at Danzante and Cacique only.

The S-band TT&C System shall support TDRS operations by providing functions that include:

a. TDRS stationkeeping and attitude control.

b. TDRS orbit determination.

c. TDRS spacecraft and payload configuration control.

d. TDRS resource maintenance, control, and monitoring.

e. WSC S-band antenna pointing control.

6.1.2 Compatibility Requirements

The STTCS shall be compatible with existing TDRS design, operations, signaling, and performance requirements. These compatibility requirements are included in:

a. TDRSS Command Requirements Document No. D01450F.

b. TDRSS Telemetry Requirements Document No. D01451F.

c. TDRSS Spacecraft/Ground Segment ICD, STDN 220.29.

d. TDRS F-7 Interface Control Document for the TDRS Spacecraft/Ground Segment, 405-F7-ICD-001.

e. TDRSS Space Segment Specification: WU-02-01.

f. TMO 253 VOLS I-IV, TDRSS Spacecraft Operations Handbook.

g. TMO 254 VOLS I-III, TDRSS Spacecraft Systems Manual.

h. Software Task Requirements (STR):

   1. White Sands Ground Terminal Software Task Requirements, WS-SE-0101.

   2. Algorithms and Constraints Interface Control Document, STGT-HE-06-3, Book 1 Section 4.

i. TDRS System Design Report, Vol. III, Space Segment, TRW: 29000-200-003-003.

6.1.3 Requirements Overview

The STTCS functional and performance requirements are divided into the following areas:

a. S-band TT&C Antenna Subsystem (Section 6.2).

b. S-band TT&C Ground Equipment (STGE) (Section 6.3).

c. S-band TT&C ADPE Subsystem (Section 6.4).

d. TDRSS Operations and Control Center (TOCC) (Section 9).

STTCS functional and performance requirements shall support on-station TDRS satellites. No additional S-band functional requirements shall be imposed in order to support TDRS launch and insertion. The S-band shall not be precluded from supporting TDRS launch and insertion using the functions specified in this Specification.

Figure 6-1 provides a descriptive overview of these functional areas.

6.1.4 Architecture

Figures 6-2 (TT&C ADPE Subsystem), 6-3 (STGE), and 6-4 (Antenna Subsystem) describe the S-band TT&C System reference architecture. The following architectural requirements shall apply:

a. TT&C Ground Equipment

1. The STTCS uplink equipment shall include one prime equipment chain with a 100% redundant chain. The components of each equipment chain shall be dedicated to either the prime or the redundant equipment chain, and shall not be interchanged between the equipment chains.

2. The STTCS downlink equipment shall include one prime equipment chain with a 100% redundant equipment chain. The components of each equipment chain shall be dedicated to either the prime or the redundant equipment chain, and shall not be interchanged between the equipment chains.

3. The prime and redundant range units shall be dedicated to their respective prime and redundant downlink equipment chains.

4. Each uplink equipment chain (prime and redundant) shall be capable of being associated with either of the two range units (prime and redundant), but not with both simultaneously.

5. Capability shall be provided so that each uplink equipment chain (prime and redundant) can be operated with either downlink equipment chain (prime and redundant), but not with both simultaneously. Selection shall be under TT&C ADPE Subsystem control and shall be made from the TOCC under normal operations.

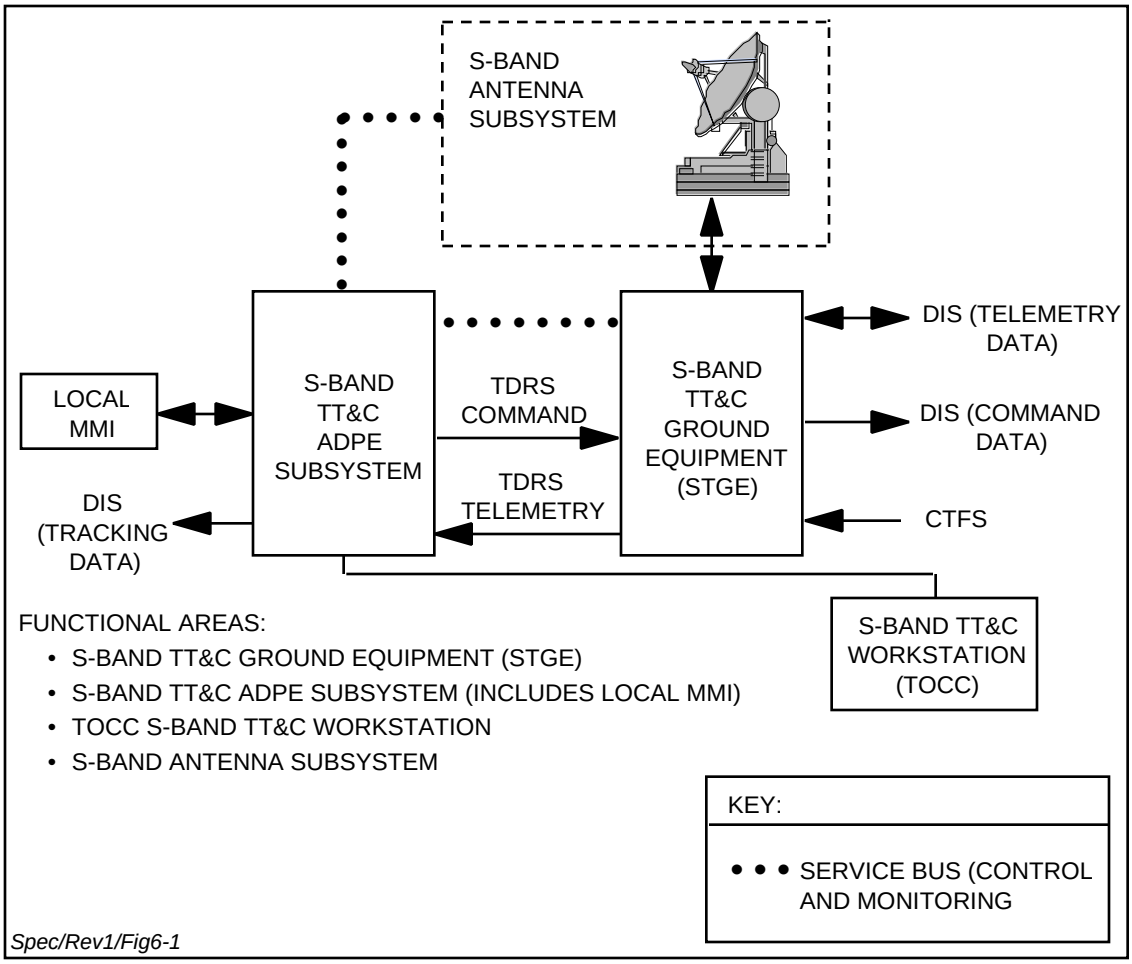

Figure 6-1. S-Band TT&C System Functional Area Overview

6. The selection of the prime downlink and uplink equipment chains shall determine the prime range unit (Item 3.) and the resulting connectivity of the range units with the uplink equipment chains.

b. TT&C ADPE Subsystem

1. There shall be a prime and redundant TT&C ADPE Subsystem. The ADPE margin requirements and the selection factors of Section 5.6.1 b and c shall apply to the S-band TT&C ADPE.

2. The prime and redundant TT&C ADPE Subsystems shall each be capable of supporting either the prime or redundant uplink equipment chains, but not both simultaneously.

3. The prime and redundant TT&C ADPE Subsystems shall each be capable of supporting either the prime or redundant downlink equipment chains, but not both simultaneously.

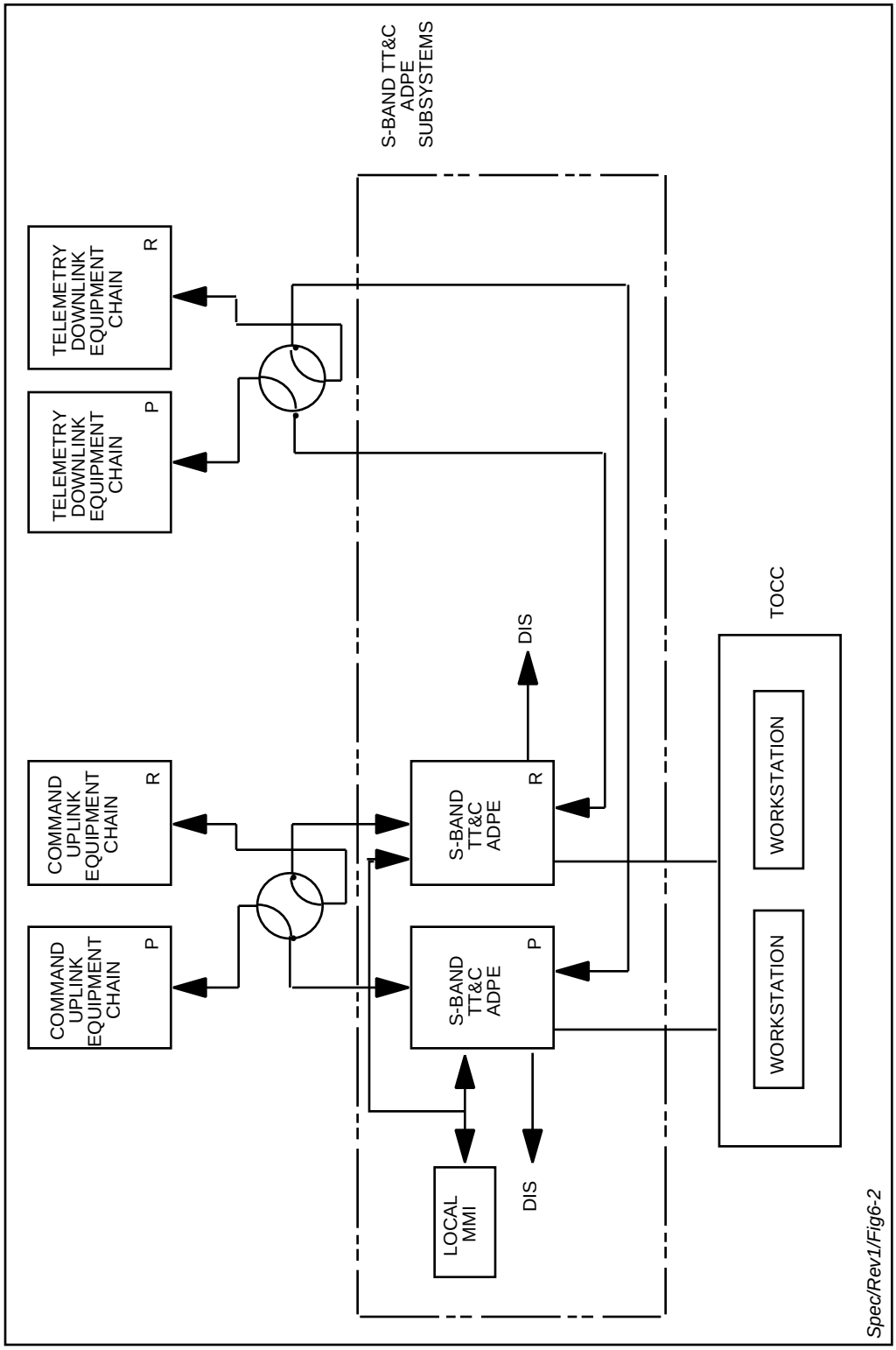

Figure 6-2. S-Band TT&C System Reference Architecture -- ADPE Subsystem

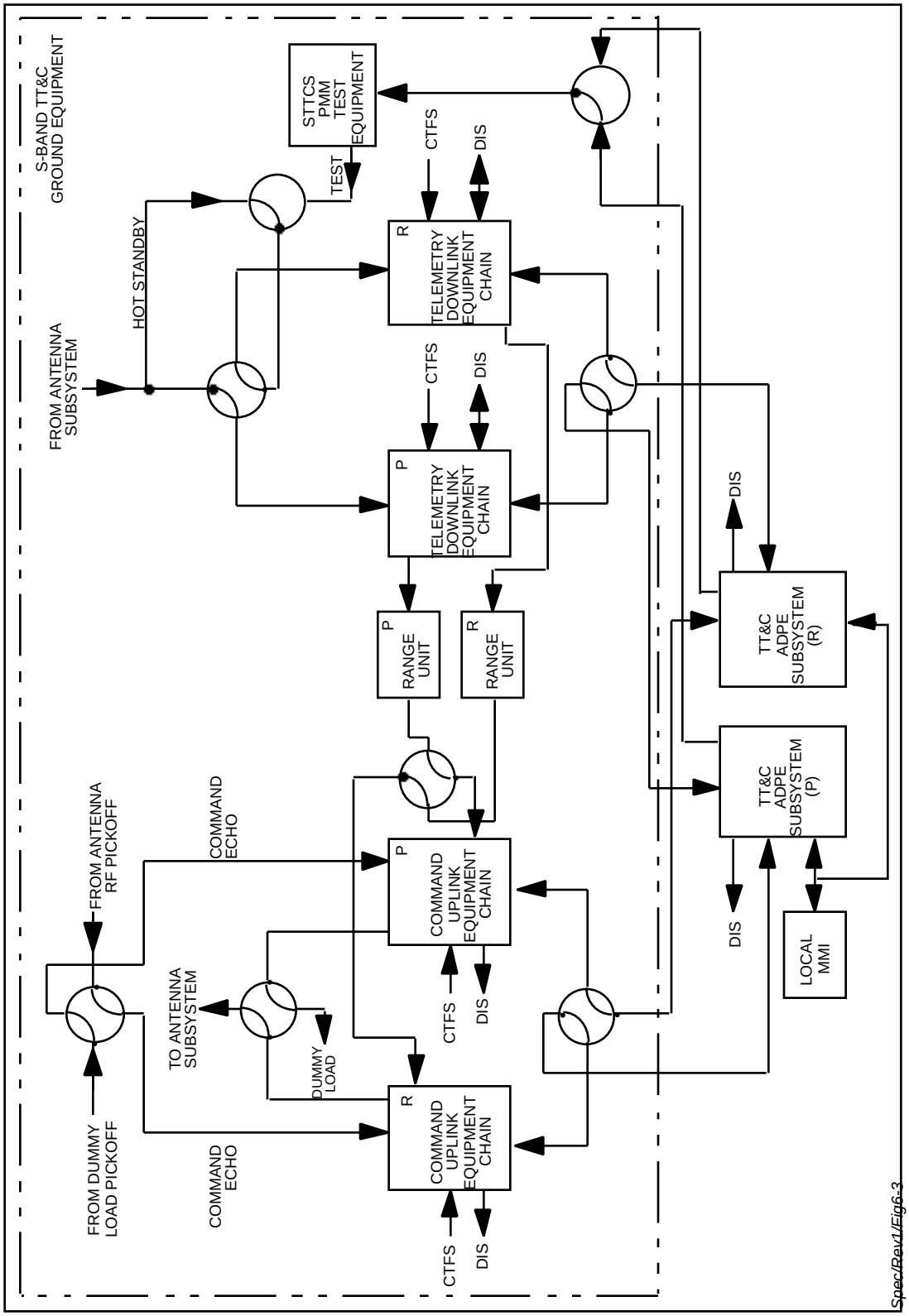

Figure 6-3. S-Band TT&C System Reference Architecture -- S-Band TT&C Ground Equipment (STGE)

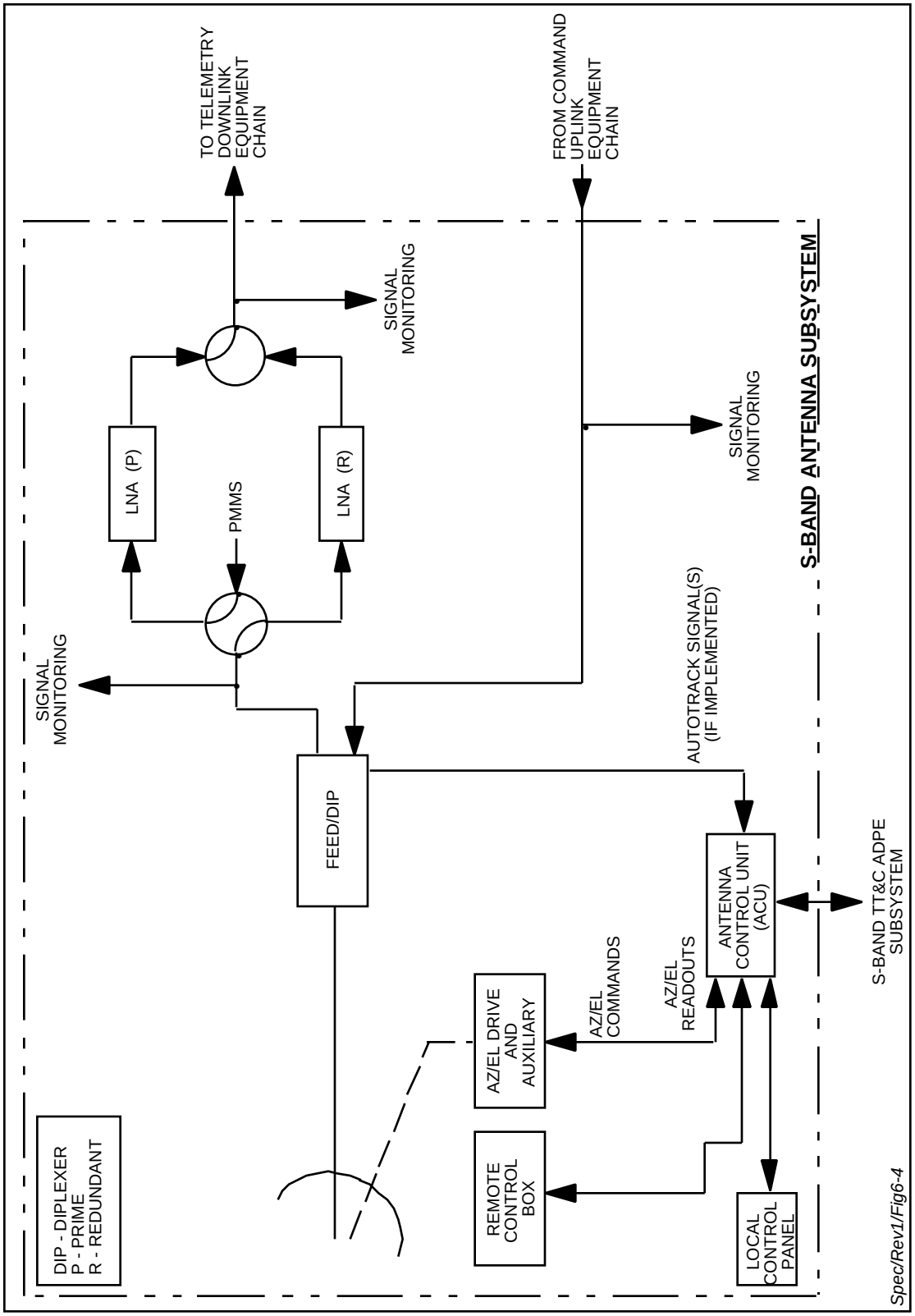

Figure 6-4. S-Band TT&C System Reference Architecture -- Antenna Subsystem

4. Each prime/redundant pair of TT&C ADPE Subsystems shall have a dedicated MMI referred to as the Local MMI.

5. The TT&C ADPE subsystem shall be capable of supporting either the S-band TT&C antenna subsystem or the third SGLT antenna subsystem for S-band operations (Danzante only).

c. Antenna Subsystem

1. There shall be one-for-one redundancy of the LNAs in the receive Antenna Subsystem equipment chain.

2. A Local Control Panel shall be provided to support local control capability.

3. A Remote Control Box located near the antenna structure shall be provided for limited antenna control capability.

4. Antenna Subsystem control and monitoring shall be performed via an Antenna Control Unit (ACU) either by the S-band TT&C ADPE subsystem or by the Local Control Panel.

5. An auxiliary drive system shall be provided for operating the antenna if the main drive becomes inoperative.

6.2 S-band TT&C Antenna Subsystem

6.2.1 Functional Requirements

The S-band TT&C Antenna Subsystem shall perform the following functions:

a. Transmit to TDRS

1. Receive command and range uplink signals from the prime TT&C command uplink equipment chain.

2. Transmit a right hand circular polarized signal to the assigned TDRS.

b. Receive from TDRS

1. Receive a right hand circular polarized telemetry and range downlink signal from the S-band omni antenna of the assigned TDRS.

2. Low-Noise-Amplify the received signal.

c. Control

1. Provide S-band antenna pointing.

2. Provide switching among redundant LNAs.

d. Monitoring

1. Provide antenna pointing angle readouts to the Local Control Panel and to the S-band TT&C ADPE Subsystem.

2. Provide control mode indication and equipment status to the Local Control Panel and to the S-band TT&C ADPE Subsystem.

3. Provide the capability to permit test signal injection and monitoring.

6.2.2 Performance Requirements

6.2.2.1 RF Characteristics

The required transmit and receive RF characteristics shall be specified in Tables 6-1 and 6-2, respectively. The specified performance shall be achieved while simultaneously transmitting and receiving.

Table 6-1. Transmit RF Characteristics

A.	TRANSMIT FREQUENCY	2.0359625 GHz
B.	RF BANDWIDTH (3 dB)	3 MHz, MINIMUM
C.	EIRP (MINIMUM INCLUDING POINTING LOSS)	70.5 dBW
D.	TRANSMIT GAIN	43.5 dBi, MINIMUM
E.	SIDELOBE PATTERN[1]	$G = 52-10\log(D/\lambda)-25\log(\theta)$ dBi, FOR $100\frac{\lambda}{D} \le \theta \le \frac{D}{5\lambda}$ WHERE G = GAIN (IN dB) AT ANY FREQUENCY IN THE SPECIFIED FREQUENCY BAND OF SIDELOBE ENVELOPE RELATIVE TO AN ISOTROPIC ANTENNA AND θ IS THE OFF-BORESIGHT ANGLE IN DEGREES. D = DIAMETER OF ANTENNA (METERS) λ = WAVELENGTH AT TRANSMIT FREQUENCY (METERS)
F.	POLARIZATION	RIGHT HAND CIRCULAR
G.	ANTENNA AXIAL RATIO	2 dB, MAXIMUM

NOTE

[1]AT ANY FREQUENCY IN THE SPECIFIED BAND, NO SIDELOBE PEAK SHALL EXCEED THIS BOUND BY MORE THAN 3 dB. NO MORE THAN 10% OF THE SIDELOBE PEAKS SHALL EXCEED THE SPECIFIED BOUND.

Table 6-2. Receive RF Characteristics

A.	RECEIVE FREQUENCY	2.211 GHz
B.	RF BANDWIDTH (3 dB)	3 MHz, MINIMUM
C.	G/T[1]	18.5 dB/°K, MINIMUM
D.	SIDELOBE PATTERN[2]	$G = 52-10\log(D/\lambda)-25\log(\theta)$ dBi, FOR $100\frac{\lambda}{D} \le \theta \le \frac{D}{5\lambda}$ WHERE G = GAIN (IN dB) AT ANY FREQUENCY IN THE SPECIFIED FREQUENCY BAND OF SIDELOBE ENVELOPE RELATIVE TO AN ISOTROPIC ANTENNA AND θ IS THE OFF-BORESIGHT ANGLE IN DEGREES. D = DIAMETER OF ANTENNA (METERS) λ = WAVELENGTH AT RECEIVE FREQUENCY (METERS)
E.	POLARIZATION	RIGHT-HAND CIRCULAR
F.	ANTENNA AXIAL RATIO	2 dB, MAXIMUM

NOTES

[1]THE SPECIFIED G/T PERFORMANCE (CLEAR SKY) SHALL INCLUDE POINTING LOSS (AT ELEVATION ANGLES OF 5° OVER THE LOCAL HORIZON AND WHENEVER THE SUN IS ± 4° OR GREATER OFF THE ANTENNA BORESIGHT) AND SHALL INCLUDE THE TOTAL CONTRIBUTION FROM THE LNA, ASSOCIATED WAVEGUIDE SWITCHES, COUPLERS AND OUTPUT WAVEGUIDES.

[2]AT ANY FREQUENCY IN THE SPECIFIED BAND, NO SIDELOBE PEAK SHALL EXCEED THIS BOUND BY MORE THAN 3 dB. NO MORE THAN 10% OF THE SIDELOBE PEAKS SHALL EXCEED THE BOUND.

6.2.2.2 Feed Isolation

The transmit feed port to the receive feed port isolation shall be 30 dB minimum at any frequency in the operating bands.

6.2.2.3 Mechanical Characteristics

Table 6-3 specifies the required Antenna Subsystem mechanical characteristics.

Table 6-3. Mechanical Characteristics

A.	AXIS CONFIGURATION	ELEVATION OVER AZIMUTH
B.	ANGULAR COVERAGE	
	1. AZIMUTH	± 165° (DEAD ZONE NORTH)
	2. ELEVATION	0° TO + 92°
C.	ANGULAR DYNAMIC CAPABILITY (EACH AXIS)	
	1. ANGULAR VELOCITY	0.002°/SEC to 2°/SEC
	2. ANGULAR ACCELERATION	$1°/SEC^2$
D.	WINDS	
	1. SURVIVAL-ANY POSITION	UP TO 130 km/HOUR
	2. SURVIVAL-STOW POSITION	UP TO 193 km/HOUR
E.	MAINTAIN NORMAL OPERATION WITHOUT DEGRADATION IN FOLLOWING ENVIRONMENT:	
	1. AMBIENT TEMPERATURE	+10°F TO +130°F
	2. RELATIVE HUMIDITY	2 TO 100% WITH PRECIPITATION
	3. PRECIPITATION	RAIN 4”/HOUR; THUNDERSTORMS, OCCASIONAL LIGHT SNOW AND ICE. OCCASIONAL HAIL UP TO 1 INCH IN DIAMETER.
	4. SOLAR RADIATION	300 BTU/SQ. FT./HR. THE ACCURACIES SPECIFIED HEREIN SHALL INCLUDE AN ALLOWANCE FOR THE EFFECTS OF DIFFERENTIAL HEATING.
	5. SAND AND DUST	BLOWN SAND AND DUST, SOUTHWESTERN DESERT REGION CATEGORY.
F.	MAXIMUM SURFACE ERROR	
	1. WINDS UP TO 48 km/HR WITH 72 km/HR GUSTS.	$\varepsilon/D < 1.4 \times 10^{-4}$ WHERE ε = RMS SURFACE ERROR RELATIVE TO THE BEST FIT DESIGN SHAPE AND D = REFLECTOR DIAMETER.
	2. SUSTAINED WINDS UP TO 72 km/HR WITH 96 km/HR GUSTS.	$\varepsilon/D < 2.1 \times 10^{-4}$
G.	COUNTERBALANCE	COUNTERBALANCED ABOUT THE ELEVATION AXIS TO THE EXTENT THAT RELEASE OF THE BRAKES UNDER NO-WIND CONDITIONS SHALL NOT RESULT IN MOVEMENT OF THE ANTENNA FROM ANY ELEVATION ANGLE.

Table 6-3. Mechanical Characteristics (Cont'd)

H. DRY AIR SYSTEM	AN AUTOMATIC DRY AIR SYSTEM SHALL BE PROVIDED FOR SERVING THE FEED ASSEMBLY AND THE TRANSMIT AND RECEIVE WAVEGUIDE RUNS.
I. CORROSION PREVENTION	THE REFLECTOR, BACKSTRUCTURE AND SUBREFLECTOR SUPPORT SHALL BE ALUMINUM WITH STAINLESS STEEL HARDWARE. THE REFLECTOR PANELS SHALL BE PROTECTED SO THAT THEY WILL NOT REQUIRE REFINISHING FOR THE LIFE OF THE ANTENNA. STEEL STRUCTURES SHALL BE GALVANIZED WHERE PRACTICAL. STEEL MEMBERS TOO LARGE TO GALVANIZE SHALL BE PROTECTED IN A MANNER THAT WILL MINIMIZE THE NEED FOR REFINISHING.
J. LIGHTNING PROTECTION	THE ANTENNA SHALL BE PROTECTED FROM LIGHTNING DAMAGE THROUGH GROUNDING CONNECTIONS TO THE SITE GROUNDING SYSTEM.

6.2.2.4 Antenna Pointing

The Antenna Subsystem shall be capable of supporting and operating under the following pointing modes:

a. ADPE Control.

b. Local Control Panel and TOCC Manual Control.

c. Hand Crank.

d. Remote Control Box Control.

The pointing performance specified below shall be achieved in support of the TDRS with a geosynchronous orbit inclination of up to 7°.

6.2.2.4.1 ADPE Control

a. The Antenna Subsystem shall be capable of receiving and processing azimuth and elevation pointing commands from the TT&C ADPE Subsystem.

b. Open loop pointing error is a measure of pointing accuracy and is defined to be the space angle (3-sigma) difference between the S-band TT&C-ADPE generated antenna pointing command vector (in terms of azimuth and elevation) and the position of the S-band TT&C antenna RF boresight axis (reference EIA standard RS-411, Section 4.1). For antenna elevation angles greater than 4° and less than 80°, the S-band TT&C Antenna Subsystem, in response to azimuth and elevation commands provided by the S-band TT&C ADPE subsystem, shall provide the following pointing accuracies:

1. Pointing error during sustained (i.e., fastest mile - EIA RS-411) winds of up to 48 km/hr with 72 km/hr gust. ≤ 0.12°

2. Pointing error during sustained winds of 72 km/hr with 96 km/hr gust. ≤ 0.24°

6.2.2.4.2 Local and TOCC Manual Control

Manual controls shall be provided both at the Local Control Panel and at the TOCC for moving and positioning the antenna. The following performance shall apply:

a. Velocity Control. Hand operated controls shall be provided for moving the antenna at any rate over the range specified in Table 6-3, Item c. These controls shall have a dead band position such that when the velocity control mode is selected, the antenna is not moved when the controls are in their dead band position.

b. Position Control. Hand controls shall be provided for positioning the antenna to resolution of 0.005°, both axes. When the position control mode is selected, the antenna shall not deviate more than 0.05° from the selected position.

6.2.2.4.3 Hand Crank

Hand cranks shall be provided for manually positioning the antenna in both azimuth and elevation and shall be readily accessible and mounted at a convenient height for personnel use. Positive interlocks shall be provided to prevent energizing the drive system during the use of the manual drive.

6.2.2.4.4 Remote Control Box

A remote control box for controlling the antenna from the antenna assembly structure shall be provided for maintenance purposes.

6.2.2.5 Equipment Status and Performance Monitoring

The requirements for equipment status and performance monitoring shall be as specified in Section 5.2.3.7 except as specified below:

a. The following Equipment and Performance Status Monitoring parameters (Table 5-7) are not required:

   1. Polarization Angle.

   2. Local/TOCC Manual Mode (Polarization).

b. Azimuth and Elevation angle readout resolutions shall be 0.01°.

c. Autotrack Signal reporting shall be required only if closed-loop control is implemented.

d. PMMS access to the return link signal for both Polarization 1 and 2 signal ports is not applicable; PMMS access shall be required at the single input signal port.

6.2.3 Interfaces

The RF interface requirements between the assigned TDRS and the Antenna Subsystem are specified in Sections 6.3.2.1 and 6.3.2.2.

6.2.4 Operations Requirements

The following operations requirements shall apply:

a. The Antenna Subsystem shall be available for operations on a continuous basis; periodic maintenance and lubrication shall be possible while the antenna is in use.

b. The antenna shall be capable of being operated manually from the following locations:

   1. TOCC.
   2. Local Control Panel.
   3. Hand Crank location (Hand Crank mode only).
   4. Remote Control Box.

c. The normal operating position shall be the TOCC S-band TT&C workstation.

d. All operating modes (Section 6.2.2.4) shall be selectable manually or via the ADPE.

e. Antenna operation in the specified environment shall be performed without the need for heaters or seasonal change of lubricant.

6.3 S-band TT&C Ground Equipment (STGE)

6.3.1 Functional Requirements

The STGE functional requirements shall be as specified in Section 5.4.2 with the following exceptions:

a. Frequency upconversion to S-band (instead of K-band) shall be required (Transmit).

b. The switching capability to distribute the RF output to the Antenna Subsystem (instead of the RF Power Combiner) or the dummy load shall be provided (Transmit).

c. Pilot tone generation is not applicable.

d. Frequency downconversion from S-band (instead of K-band) shall be required (Receive).

e. The switching capability to select RF input from either the Antenna Subsystem (instead of the RF Power Divider) or the PMMS test equipment shall be provided (Receive).

6.3.2 Performance Requirements

The S-band TT&C Ground Equipment performance shall be as specified below.

6.3.2.1 RF Transmit Component

The RF Transmit Component requirements shall be as specified in Section 5.4.3.1 with the following exceptions:

a.	Uplink Center Frequency	2.0359625 GHz
b.	Power Output	33 dBW (nominal)
c.	S-band phase noise	1 Hz to 1 kHz ≤ 1.0° rms 1 kHz to 3 MHz ≤ 0.5° rms
d.	Antenna Polarization	Right Hand Circular
e.	Transmit Signal-to-Thermal Noise Ratio (within ± 1.5 MHz of the carrier)	≥ 50 dB at full power

6.3.2.2 RF Receive Component

The RF Receive Component shall consist of all the necessary equipment to satisfy the performance requirements specified below from the interface with the S-band Antenna Subsystem to the interface with the telemetry receiver processing. In the functional diagram, Figure 5-30, this component is shown as amplification, downconversion, and signal splitting.

6.3.2.2.1 Input Signal Characteristics

The input signal to the RF Receive Component shall have the following characteristics:

a.	Telemetry Carrier Center Frequency	2211.0 MHz
b.	Telemetry carrier effective long term (10 years) frequency stability	± 80 kHz (max)
c.	Doppler Offset (one-way) Synchronous orbit	± 250 Hz (max)
d.	Received isotropic total signal	-201.8 dBW (min) -181.8 dBW (max)
e.	Spurious Signals RMS-Sum of all in-band spurs	≥ 30 dB below unmodulated carrier
	Discrete in-band spurs	≥ 40 dB below unmodulated carrier
f.	Incidental amplitude modulation	≤ 2%
g.	Incidental discrete in-band phase modulation	≥ 40 dB below unmodulated carrier

h.	Received isotropic carrier level	-208.4 dBW (min) -181.8 dBW (max)
i.	Received isotropic telemetry subcarrier level	-207.8 dBW (min) -181.8 dBW (max)
j.	Received isotropic ranging signal level	-221.4 dBW (min) -181.8 dBW (max)
k.	Signal format	The telemetry signal format is specified in Section 5.4.3.7 The range signal format is specified in Section 5.4.3.5
l.	Polarization	Right Hand Circular

6.3.2.2.2 Equipment Characteristics

The RF Receive Component equipment characteristics shall be as specified in Section 5.4.3.2.2.

6.3.2.2.3 Output Signal Characteristics

For the input signal characterized in Section 6.3.2.2.1, the output signal characteristics of the RF Receive Component shall be as follows:

a.	Demodulation scale factor variation	27 dB (max)
b.	Telemetry subcarrier signal-to-noise ratio in 250 Hz bandwidth	≥ 15.3 dB
c.	Range tone signal-to noise ratio in 2 Hz bandwidth	≥ 22.7 dB (equivalent to 11.9 dB in a 24-Hz bandwidth)
d.	Discrete in-band spur from all ground segment sources	≥ 35 dB below the range signal

6.3.2.3 Command Assembly

The Command Assembly consists of command encoding and command modulation. The Command Assembly performance requirements shall be as specified in Section 5.4.3.3.

6.3.2.4 TDRS Ranging Unit

The TDRS Ranging Unit performance requirements shall be as specified in Section 5.4.3.5.

6.3.2.5 Command Echo Return Chain

The Command Echo Return Chain performance requirements shall be as specified in Section 5.4.3.6 except that the reference figure is Figure 6-3 (instead of Figure 5-32).

6.3.2.6 Telemetry Assembly

The Telemetry Assembly provides subcarrier demodulation, and bit and frame synchronization. The Telemetry Assembly performance requirements shall be as specified in Section 5.4.3.7 except that the interface with the KSA autotrack equipment is not applicable.

6.3.2.7 Strip Chart Recorder Equipment

The Strip Chart Recorder equipment performance requirements shall be as specified in Section 5.4.3.8.

6.3.2.8 KG Interface Equipment

The KG interface equipment performance requirements shall be as specified in Section 5.4.3.9, except that KSA autotrack delay compensation is not applicable (Section 5.4.3.9.a).

6.3.2.9 Performance Measuring and Monitoring (PMM) Support

The PMM support requirements shall be as specified in Section 5.4.3.11, except that RF HPA Power monitoring of the Pilot signal is not applicable (Section 5.4.3.11.b.1.b).

6.3.2.10 PMM Test Equipment

The PMM test equipment performance requirements shall be as specified in Section 5.4.3.10, except that carrier frequency is at 2.211 GHz instead of 13.731 GHz (Section 5.4.3.10.f) and the reference figure is Figure 6-3 instead of Figure 5-32.

6.3.2.11 Equipment Controls

The adjustable and controllable equipment parameters shall include those specified in Table 5-62, except that Pilot signal controls are not applicable.

6.3.3 Interfaces

The STGE interface with systems/subsystems external to the STTCS shall include the parameters listed in Table 6-4.

Table 6-4. S-band TT&C Equipment Interface Requirements

FROM	TO	PARAMETER/SIGNAL
DIS	STTCS BIT SYNCH	GSTDN TDRS TELEMETRY
STTCS	DIS	NCC TDRS CLEAR TEXT TELEMETRY
STTCS COMMAND EQUIPMENT	DIS	GSTDN TDRS COMMAND
CTFS	STGE	1 PPS, 5 MHz STANDARD

6.3.4 Operations Requirements

The operations requirements shall be as specified below:

a. During TTCS contingencies, the STTCS shall maintain the health and welfare of the TDRS, and aid in re-establishing K-band TT&C. No customer service support is required during S-band TT&C support.

b. The coordination of S-band TT&C operational support with K-band TT&C shall be via operator-to-operator voice communications.

c. Panel switches on the STTCs Command Uplink equipment shall allow an operator to manually command the TDRS spacecraft as specified in Table 5-58.

d. The digital output of the command encoder shall be manually reconfigurable via equipment front panel control for output to GSTDN via the DIS.

e. Input to the telemetry downlink equipment shall be manually reconfigurable via front panel control so that digital telemetry from GSTDN, via the DIS, can be received.

f. Panel switches on the STTCS equipment shall allow an operator to control the equipment as specified in Section 6.3.2.11.

g. Panel controls on the STTCS equipment shall permit an operator to select the configuration switch positions (Figure 6-3) to establish prime and redundant equipment chains in accordance with the architecture of Section 6.1.4.

h. The Strip Chart Recorder equipment shall permit an operator to select up to 16 TDRS telemetry parameters to be simultaneously recorded.

6.4 S-band TT&C ADPE Subsystem

6.4.1 Functional Requirements

The TT&C ADPE Subsystem Functional requirements shall be as specified in Section 5.6.4.2 with the following exceptions:

a. Customer vector propagation and interpolation are not applicable (Section 5.6.4.2.5).

b. TDRS SA antenna pointing and control, and KSA autotrack requirements are not applicable (Sections 5.6.4.2.18 through 5.6.4.20).

c. SGLT Ground Antenna Polarization alignment requirements are not applicable (Section 5.6.4.22).

d. TDRS configuration and control requirements to support customer services are not applicable (Sections 5.6.4.23 through 5.6.4.26, and Sections 5.6.4.2.28 and 5.6.4.2.29).

e. Operations message handling requirements concerning customer services are not applicable (Section 5.6.4.2.33).

f. The special interface with the KSA autotrack equipment is not applicable (Section 5.6.4.2.34, Item e). An equipment interface with the TT&C S-band Antenna Subsystem shall be required.

g. S-band TT&C antenna pointing and control requirements shall be as specified in Section 6.2.2 and below (instead of Section 5.6.4.2.21):

   1. With the Antenna Subsystem, coordinate the antenna control modes specified below:

      (a) ADPE Control (automatic control).

      (b) Local Control Panel and TOCC manual control.

      (c) Hand Crank.

      (d) Remote Control Box Control.

   2. Coordinate ADPE/Manual operation by releasing TT&C ADPE Subsystem control of the antenna upon recognition that the Antenna Control ADPE/Manual switch is in the manual position. The switch shall be interrogated once per second.

   3. Receive performance and equipment status information from the Antenna Subsystem that include:

      (a) Antenna Azimuth Angle Readout.

      (b) Antenna Elevation Angle Readout.

      (c) ADPE/Manual Modes.

   4. Command the antenna at a rate which is consistent with the angular dynamic capability of the antenna as specified in Section 6.2.1.

   5. Control calibration of the SGLT antenna angles (i.e., azimuth and elevation). Provide the corrected angles to the Executive ADPE Subsystem. Provide pointing data with an accuracy of 0.10° or better.

h. TDRS tracking data shall be formatted by the S-band TT&C ADPE in accordance with 530-ICD-NCC-FDF/WSC, logged and sent to the black data switch for transmission to the FDF.

i. STTCS ground equipment control requirements shall be as specified in Section 5.6.4.2.35 with the following exceptions:

   1. S-band (instead of K-band) upconverter power control shall be required.

   2. Pilot tone controls are not applicable.

   3. KSA autotrack controls are not applicable.

j. Provide Local Control Mode Support as described in Paragraphs 4.5.2.c and 5.6.4.2.36 with the following exceptions:

   1. Control of customer service is not applicable.

   2. Support of on-going customer services is not applicable.

   3. Initiation and termination of TDRS tracking is applicable.

   4. Initiation and control of the frequency of TDRS tracking data collection is applicable.

   5. Initiation of OPMs 03 and 12 is not applicable.

6.4.2 Interface Requirements

The TT&C ADPE Subsystem external interfaces shall be as specified below.

a. Interface with DIS. The TT&C ADPE Subsystem shall interface with the DIS to provide TDRS tracking data to the FDF.

b. Interface with CTFS. The TT&C ADPE Subsystem shall receive time information from the CTFS.

c. Interface with the third SGLT antenna subsystem (Danzante only) to provide one-for-one redundancy for the S-band TT&C antenna subsystem.

6.4.3 Margin Requirements

The Local MMI and TOCC workstations in the S-band TT&C ADPE Subsystem, with all application and systems software embedded, shall provide margin requirements as specified in Section 5.6.1.b.

Section 7. Common Time and Frequency System (CTFS)

7.1 Overview and Architecture

This section specifies the architectural, functional, performance, interface, and operations requirements of the CTFS.

The CTFS shall generate and distribute highly accurate and stable timing pulses, Time-of-Year data, and frequency coherent signals to the WSC systems and subsystems as required. The CTFS shall be characterized by high reliability, high maintainability, and ease of operation. Hardware redundancy with failover provisions shall be incorporated in the CTFS.

The GRGT CTFS shall utilize only the Global Positioning System (GPS) Time Transfer Unit to obtain United States Naval Observatory (USNO) time and frequency references. As such, all reference to WWVB and Loran-C receiving equipment are not applicable when referring to the GRGT CTFS.

7.1.1 Architecture

Figure 7-1 depicts the reference architecture for the CTFS. The CTFS shall include four subsystems:

a. Precision Frequency Source (PFS) consisting of two Cesium Beam Frequency Standards, two Disciplined Oscillators, and a redundant switch. The Cesium Beam Frequency Standards and the Disciplined Oscillators shall be provided with redundant, hot-standby power supplies.

b. Timing Signal Generation (TSG) Subsystem consisting of redundant Time Code Generators with time code and pulse rate generation capability. The Time Code Generators shall be provided with redundant, hot-standby power supplies.

c. Signal Distribution Subsystem consisting of the facilities for distributing frequency references and timing signals to WSC systems and subsystems. The Signal Distribution Subsystem shall include multi-output Distribution Amplifiers located throughout the WSC facility.

d. Measuring and Monitoring Subsystem consisting of WWVB receiver, Global Positioning System Time Transfer Unit, and Loran-C receiving equipment to obtain United States Naval Observatory (USNO) time and frequency references; provision for synchronizing the station clock to the USNO references; and equipment for measuring, monitoring, and displaying the difference between the station and USNO time and frequency.

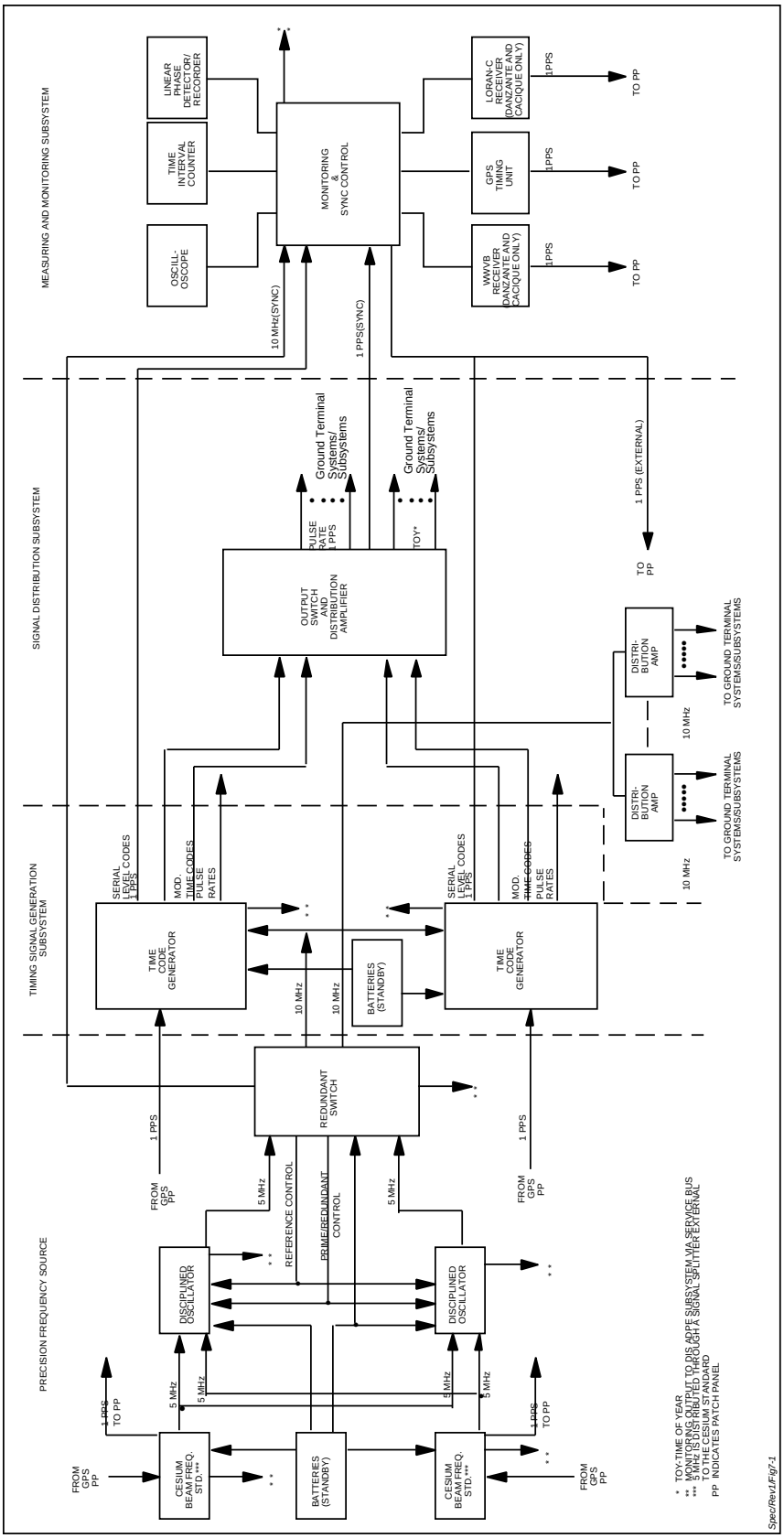

Figure 7-1. CTFS Reference Architecture

In order to achieve the required operational availability, the components of the CTFS shall be connected to the facility Uninterruptable Power bus. In addition, the PFS and the TSG equipment shall have backup battery power for continued operation in the event of extended station power outage for at least 8 hours. The batteries may be shared by the components of the PFS.

The CTFS subsystems shall incorporate provision for monitoring and reporting the performance and status of the CTFS to the DIS ADPE Subsystem (Danzante and Cacique only).

7.2 Functional Requirements

This section specifies the functional requirements of the CTFS subsystems.

7.2.1 Precision Frequency Source (PFS)

The PFS shall be an integrated subsystem which shall include the Cesium Beam Frequency Standards, Disciplined Oscillators, and a redundant switch to generate reliable, stable, and accurate frequencies.

7.2.1.1 Cesium Beam Frequency Standard

The two physically, electrically, and operationally identical Cesium Beam Frequency Standards shall provide outputs of 10 MHz, 5 MHz, 1 MHz, and 100 kHz. The Cesium Beam Frequency Standard shall also provide a 1 pps pulse output.

The two Cesium Beam Frequency Standards shall be capable of simultaneous operation. Both devices shall provide a 5 MHz reference to each Disciplined Oscillator. The 5 MHz splitting may be implemented externally to the Cesium Beam Frequency Standards.

The Cesium Beam Frequency Standard 1 pps output shall be capable of being synchronized with a 1 pps output from the GPS or Loran-C timing reference equipment of the Measuring and Monitoring Subsystem. This synchronized 1 pps output shall be provided to a patch panel for subsequent use, as required.

7.2.1.2 Disciplined Oscillators

The two physically, electrically, and operationally identical Disciplined Oscillators shall provide 5 MHz RF signals.

The important functional requirement for the Disciplined Oscillators is that they shall have short term frequency stability and phase noise performance superior to that of the Cesium Beam Frequency Standards. Such stability is required in order to meet the performance requirements for customer Doppler tracking data as specified in Section 5.3.3.3.2.

The Disciplined Oscillators shall receive frequency reference signals from the Cesium Beam Frequency Standards and provide 5 MHz precision frequencies to the Redundant Switch as shown in Figure 7-1.

7.2.1.3 Redundant Switch

The 5 MHz input from the Disciplined Oscillators shall be multiplied by 2 by the Redundant Switch. The switch shall be capable of controlling the selection of the reference frequency of the two (2) disciplined standards. In the event of a failure to the on-line disciplined frequency standard, the redundant switch shall switch over to the backup disciplined frequency standard. Either of the disciplined frequency standards may be manually selected as the on-line standard without compromising the automatic switchover feature. The 10 MHz output from the redundant switch shall be provided to the Measuring and Monitoring Subsystem for comparison with the 10 MHz reference derived from the GPS/Loran-C receivers.

7.2.1.4 Standby Power Supply

The PFS shall contain provision for backup battery power in the event of extended station power outage.

7.2.1.5 PFS Monitoring Provisions

The PFS shall include provision for monitoring the performance and status of the PFS equipment. The detection of failure or out-of-limit conditions shall cause a visual alarm. In addition, the results of the monitoring functions of the Danzante and Cacique CTFS shall be reported to the respective DIS ADPE Subsystem via a service bus.

7.2.2 Timing Signal Generation (TSG) Subsystem

The functional requirements for the TSG are specified below.

7.2.2.1 Time Code Generators

The TSG shall include two independent time code generators which shall be physically, electrically, and operationally identical. The time code generators shall be capable of operating from the same or separate 10 MHz from the frequency switch. The time code generators shall generate serial time codes and various pulse rates as specified in Section 7.3.2.

The Time Code Generators shall continuously display UTC for visual readout of Time-of-Year in Day, Hours, Minutes, and Seconds. A Leap Year switch shall be provided to recycle the generator on day 365 or 366.

7.2.2.1.1 Time Code and Pulse Rate Generation

The Time Code Generators shall receive the 10 MHz output from the redundant switch and the 1 pps output of the patch panel (sources of the 1 pps output are the Cesium Beam Frequency Standards, the GPS Receiver, the Loran-C Receiver, and the WWVB Receiver). The generators shall perform the logical operations required to produce pulse outputs at 1 MHz, 100 kHz, 10 kHz, and 1 kHz. The Time Code and Pulse Rate circuitry shall also perform the operations required to provide the time codes and pulse rates specified in Section 7.3.2.

7.2.2.1.2 Test Speedup Mode

The Time Code Generators shall be capable of increasing the pulse rate of serial codes as specified in Section 7.3.2 to facilitate maintenance.

7.2.2.1.3 Preset Controls

The capability shall be provided to set the major time counters (greater than 1 per second) of the Time Code generators to time-of-year on initial synchronization. Additionally, the capability shall be provided to preset manually the millisecond and microsecond counters for use in a test mode. Controls shall be provided to preset the display, to reset the display, to arm and to stop for external sync, and to start manually.

7.2.2.2 TSG Monitoring Provisions

The TSG shall include provisions for measuring and monitoring the performance and status of the Time Code Generators. Detected anomalies shall result in a visual and audible alarm. In addition, the results of the monitoring function of the Danzante and Cacique CTFS shall be reported to the respective DIS ADPE Subsystem via a service bus.

7.2.2.3 Standby Power Supply

The TSG shall contain provision for backup battery power in the event of extended station power outage.

7.2.3 Signal Distribution Subsystem

The Signal Distribution Subsystem shall receive 10 MHz from the Redundant Switch and time codes and pulse rates from the Time Code Generators and distribute required frequency references and timing signals to WSC systems and subsystems.

7.2.3.1 10 MHz Signal Distribution

10 MHz precision frequency signals shall be distributed by a multi-point distribution network. 10 MHz signal distribution shall be via low-noise distribution amplifiers with multiple, isolated outputs at each node of the network. Unused 10 MHz outputs shall be terminated. The future capability for distribution of 5 MHz and/or 1 MHz signals shall be provided.

7.2.3.2 Pulse Rates and Serial Time Code Outputs

The capability shall be provided to distribute pulse rates and Serial Time Codes as required. Unused pulse rate and serial time code outputs shall be terminated. All outputs shall be short-circuit proof. The Signal Distribution Subsystem shall distribute GMT for display at appropriate locations throughout the operations areas of each ground terminal.

7.2.3.3 Parallel Time Code

Remote systems/subsystems requiring parallel time code shall generate them, as required, from the serial time code provided by the CTFS.

7.2.4 Measuring and Monitoring Subsystem

This section specifies the functional requirements for the Measuring and Monitoring Subsystem.

7.2.4.1 External Time and Frequency Reference

The Measuring and Monitoring Subsystem shall synchronize the station frequency and time to the USNO Master Clock via received radio transmissions. Coarse time and time-of-day shall be obtained from reception of WWVB transmissions. Fine frequency and time relationships shall be established with a GPS Time Transfer Unit and a Loran-C receiver. The difference between the CTFS and USNO Master Clock frequency and time shall be measured and monitored using the Time Interval Counter and the Linear Phase Detector/Recorder contained in the Measuring and Monitoring Subsystem. The subsystem shall include a wideband, dual channel oscilloscope for visually monitoring pulse waveforms and time relationship. The oscilloscope shall have an external Z-axis input. The Linear Phase Detector/Recorder shall display the phase difference between the two Cesium Beam Frequency Standards on a strip chart.

7.2.4.2 CTFS Performance and Status Reporting

The Measuring and Monitoring Subsystem shall report CTFS and status data obtained from the measuring equipment to the DIS ADPE Subsystem at each Danzante and Cacique, and shall be provided locally at GRGT. The Measuring and Monitoring Subsystem shall make available performance data to permit post-operations analysis, which will result in knowing the CTFS clock in retrospect to within 200 nanoseconds of the USNO Master Clock UTC, using the USNO data published daily with regard to time offsets of the Loran-C Navigation Chains and the GPS satellites. Each ground terminal shall implement periodic corrections to the respective CTFS, as necessary. OPM-54 shall be used for daily reports of the time offsets in the following format:

Subject: Daily Timing Data Report

1)		Date	Time	Sat. No.	TI/FIT
2)	GGG	YYMMDD	HHMMSS	XX	XXXX.XXX
3)		Date	Data	Loran XMTR No.	
4)	LLL	YYMMDD	XXXXX.XX	XXX	

Comments:

1) YYMMDD station 1 pps minus primary cesium (SN____) 1 pps equals XXX.XX microseconds.

2) YYMMDD station 1 pps minus back-up cesium (SN___) 1 pps equals XXX.XX microseconds.

3) Additional comments:

NOTE

In additional comments include information that pertains to time step adjustments, frequency standard adjustments, equipment problems, timing anomalies and power interruptions.

Format explanation - 1 and 2. GGG is the designation for GPS data. Date is for year, month and day, time is for hour, minutes and seconds when the GPS data was taken. Sat. No. is for the GPS satellite number to identify what GPS clock was used to obtain the timing data.

TI/FIT is the value in microseconds and nanoseconds that represents the difference of the input 1 pps to the receiver and the 1 pps from the GPS satellite clock.

3 and 4 - LLL is the designation for Loran-C data. Date is for the year, month and day the reading was taken from the Loran receiver.

Data is the total emission delay value in microseconds and nanoseconds indicated on the Loran receiver display.

XMTR No. is for the Loran-C transmitter number to identify the Loran-C chain and station in that chain being used for time synchronization.

7.3 Performance Requirements

This section specifies the performance requirements for the CTFS.

Frequency synchronization shall be maintained to $\frac{\Delta f}{f} = \pm 2 \times 10^{-12}$. Time synchronization shall be maintained to within 1 microsecond of real time of the USNO Master Clock UTC using the GPS Time Transfer Unit. Time synchronization shall be maintained to within 5 microseconds in real time of the USNO Master Clock UTC using the Loran-C receiver.

7.3.1 Precision Frequency Source Requirements

7.3.1.1 Cesium Beam Frequency Standard

The Cesium Beam Frequency Standards shall meet or exceed the performance requirements tabulated in Table 7-1.

Table 7-1. Cesium Beam Frequency Standard Performance Requirements

ACCURACY $\left(\frac{\Delta f}{f}\right)$	WITHIN ± 4 x 10^{-12} - OVER ANY ± 2.5°C RANGE BETWEEN 15°C AND 35°C - SUBJECT TO MAGNETIC FIELDS ≤ 2 GAUSS
FREQUENCY STABILITY LONG TERM $\left(\frac{\Delta f}{f}\right)$ SHORT TERM ($\sigma_y(\tau)$) (SQUARE ROOT OF ZERO-DEAD-TIME TWO-SAMPLE ALLAN VARIANCE)	 WITHIN ± 2 x 10^{-12} OVER LIFE OF TUBE < 5 x 10^{-12} FOR 1 SEC AVERAGING TIME < 2.7 x 10^{-12} FOR 10 SEC AVERAGING TIME < 8.5 x 10^{-13} FOR 100 SEC AVERAGING TIME
SSB PHASE NOISE IN 1Hz BW (£(f)) (5 MHz OUTPUT)	< -96 dBc AT 10^0 Hz OFFSET < -120 dBc AT 10^1 Hz OFFSET < -125 dBc AT 10^2 Hz OFFSET < -140 dBc AT 10^3 Hz OFFSET
SINUSOIDAL OUTPUTS (INDEPENDENTLY BUFFERED)	10 MHz, 5 MHz, 1 MHz, 100 kHz (> 1 Vrms INTO 50 OHM LOAD)
HARMONIC OUTPUTS (ANY HARMONIC)	< -40 dBc
NON-HARMONICALLY RELATED OUTPUTS	< -80 dBc
SPURIOUS OUTPUTS UNDER VIBRATION OR AC MAGNETIC FIELD (ANY SPUR)	< -60 dBc
LONG-TERM FREQUENCY STABILITY IN DC MAGNETIC FIELD $\left(\frac{\Delta f}{f}\right)$	WITHIN ± 2 x 10^{-13} - 2 GAUSS FIELD - ANY ORIENTATION
LONG-TERM FREQUENCY STABILITY IN AC MAGNETIC FIELD $\left(\frac{\Delta f}{f}\right)$	WITHIN ± 2 x 10^{-12} - 2 GAUSS PEAK FIELD - 50, 60, 400 Hz (± 10%)
FREQUENCY CHANGE FROM 25°C $\left(\frac{\Delta f}{f}\right)$	< 1 x 10^{-13}/°C OVER TEMPERATURE RANGE OF 15°C TO 35°C

Table 7-1. Cesium Beam Frequency Standard Performance Requirements (Continued)

1 PPS OUTPUTS (FRONT AND REAR PANEL):	
AMPLITUDE:	10 V PEAK WITH 50 OHM LOAD
WIDTH:	≥ 20 MICROSECOND
RISE TIME:	< 50 NANOSECONDS
FALL TIME:	< 50 NANOSECONDS
JITTER, PULSE-TO-PULSE:	< 1 NANOSECONDS, rms
SYNCHRONIZATION	AUTOMATIC, 100 NANOSECONDS
	± 100 NANOSECONDS DELAY

7.3.1.2 Disciplined Oscillators

Each of the Disciplined Oscillators shall meet or exceed the performance requirements tabulated in Table 7-2.

Table 7-2. Disciplined Oscillator Performance Requirements

REFERENCE INPUT(S):	5 MHz, 1V TO 4V PEAK
STANDARD OUTPUTS (INDEPENDENTLY BUFFERED):	
FREQUENCY:	5 AND 10 MHz
AMPLITUDE:	1 Vrms ± 10% WITH 50 OHM LOAD
HARMONIC DISTORTION:	< 50 dBc
SPURIOUS OUTPUTS:	< 80 dBc
ISOLATION:	< 1 x 10^{-11} FROM NO LOAD TO 50 OHMS
SSB PHASE NOISE IN 1 Hz BW (£(f))	< -80 dBc AT 10^{-1} Hz OFFSET
(10 MHz OUTPUT WITH CESIUM REFERENCE)	< -105 dBc AT 10^{0} Hz OFFSET
	< -120 dBc AT 10^{1} Hz OFFSET
	< -125 dBc AT 10^{2} Hz OFFSET
	< -140 dBc AT 10^{3} Hz OFFSET
SHORT TERM FREQUENCY STABILITY ($\sigma_y(\tau)$)	< 9 x 10^{-13} FOR AVERAGING TIME τ, 1 SEC < τ < 100 SEC
SQUARE ROOT OF ZERO-DEAD-TIME TWO-SAMPLE ALLAN VARIANCE)	

Table 7-2. Disciplined Oscillator Performance Requirements (Continued)

FREQUENCY OFFSET $\left(\frac{\Delta f}{f}\right)$	
LOCKED:	< 1 x 10^{-12} OVER ANY 24 HR. AVERAGING TIME < 5 x 10^{-11} OVER TEMPERATURES FROM 0° TO 50°C
UNLOCKED:	< 6 x 10^{-12} OVER 72 HRS. AVERAGING TIME

7.3.1.3 Redundant Switch

The performance requirements for the Redundant Switch are given in Table 7-3.

Table 7-3. Redundancy Switch Performance Requirements

FREQUENCY INPUTS (1 Vrms INTO 50 OHMS)	5 AND 10 MHz
OUTPUTS (2 EACH)	
FREQUENCY:	5, 10 MHz WITH > 95 dB ISOLATION
AMPLITUDE:	1 Vrms WITH 50 OHM LOAD
HARMONICS:	< 50 dBc (ANY COMPONENT)
SPURIOUS OUTPUTS:	< 90 dBc (ANY SPUR)
SWITCHING SPEED	< 100 NANOSECONDS

7.3.2 Timing Signal Generation Requirements

a. The TSG shall generate serial time codes.

1. Required Serial Time Codes - NASA 1-sec BCD, IRIG-B, and IRIG-G in both the level shift time and modulated code format shall be generated. For the modulated serial time codes, the amplitude mark-to-space shall be adjustable from 2:1 to 6:1. The correlation of pulse rates shall be within 50 nanoseconds of each other.

2. Required Parallel Time Codes - Parallel time codes shall be generated, as required, by remote systems/subsystems from CTFS supplied serial time code. Refer to IRIG Standard 128-77, dated April 1978. All pulses shall be positive going. The positive going leading edges of parallel “on-time” pulses shall be mutually aligned to within 50 nanoseconds of each other. Pulse-to-pulse jitter shall be less than 2 nanoseconds maximum. Pulse jitter shall be measured from the positive transition at the 1.5 V level of the pulse to the zero crossing of the 10 MHz input reference.

3. Required Pulse Rates - The TSG shall generate independent pulse waveforms at pulse rates in decades from 1 pps to 1 megapulse per second. The pulse of 1 pulse per minute shall also be generated. All pulses shall be positive going. The positive going leading edges of independent "on-time" pulses shall be mutually aligned to within 50 nanoseconds of each other. A negative going "on-time" 1 pps shall also be provided. All pulse rates shall have a 10% duty cycle, with the exception: 50% duty cycle for 1 Mpps, 100 microsecond pulse width for 1 pps, and 1 second pulse width for 1 ppm.

b. Test Speedup Rates - Speedup rates shall be from X 10 pps to X 100,000 pps in decade steps.

c. Time Code Generator Time Synchronization - Each generator shall be initiated from an external 1 pps to within 100 nanoseconds of the "on-time" edge of the external 1 pps. The positive going edge of the external start 1 pps shall have a rise time of less than 10 nanoseconds. The positive going edge of the transition is "on-time."

d. Advance/Retard Capability - Each generator shall have an Advance/Retard digital resolver in eight steps from 100 milliseconds per second to 50 nanoseconds per second with no erratic operation effects related to switch bounce. All generators shall have the capability to be synchronized to within 50 nanoseconds of each other and shall have a 200 nanosecond window for the "out of sync" detector. The "out of sync" detector shall compare the 1 pps output of each generator.

e. Leap Seconds - The Time Code Generator shall have provision for adding exactly one second from accumulated time coincident with the next 24-hour update without upsetting the minor time of the generator. Synchronization with UTC shall be maintained during this adjustment.

7.3.3 Signal Distribution Subsystem

The Signal Distribution Subsystem shall provide the capability for the distribution of timing and frequency signals as required by the systems and subsystems of each ground terminal. The nominal characteristics of the frequency and pulse signals available from this subsystem are given in Table 7-4.

7.3.3.1 Timing Signals

7.3.3.1.1 Pulse Rate and Serial Time Code Characteristics

The pulse-to-pulse jitter at all required pulse rates and for DC level-shift time codes shall not exceed 2 nanoseconds pulse-to-pulse maximum. The "on-time" edge of pulses at all pulse rates shall have a transition time of 10 nanoseconds or less, the transition time of the pulse trailing edge shall be 50 nanoseconds or less. The level of distributed pulses shall not be less than 3.4.V peak.

Table 7-4. Output Signal Characteristics

SIGNALS	IMPEDANCE (OHMS)	LEVEL
10 MHz	50	1 Vrms
5 MHz	50	1 Vrms
1 MPPS	50	+5V
100 KPPS	50	+5V
10 KPPS	50	+5V
1 KPPS	50	+5V
100 PPS	50	+5V
10 PPS	50	+5V
1 PPS	50	+5V
1 PPS DELAYED	50	+5V
1 PULSE PER MINUTE	50	+5V
NASA 1/SEC BCD MODULATION (MOD.)	50	1 Vrms
IRIG B TIME MOD	50	1 Vrms
IRIG G TIME MOD.	50	1 Vrms
NASA 1/SEC BCD LEVEL SHIFT (L.S.)	50	+5V
IRIG G TIME CODE L.S.	50	+5V
[1]PARALLEL BINARY CODE PB-4	SEE NOTE 2	SEE NOTE 2

NOTES

[1]GENERALLY LOCATED IN THE MDM EQUIPMENT.

[2]IN ACCORDANCE WITH EIA STANDARD RS-422.

7.3.3.1.2 Parallel Time Code Characteristics

Parallel Time Code signals shall conform to the requirements to IRIG 128-77.

7.3.3.2 10 MHz Distribution Amplifiers

The performance characteristics of the Distribution Amplifiers shall be as follows:

a. Frequency

   1. Input frequencies 10 MHz

   2. Output frequencies 10 MHz

b. Number of outputs: 10 minimum

c. Output Voltage Level: Nominal 1 Vrms, 100 ohms, balanced

d. Harmonic Distortion: 50 dBc

e. Non-Harmonically Related Signals: 80 dBc, including AM, PM, and FM sidebands due to line frequency and parasitic oscillations up to and including S-band.

f. Output signal isolation

   1. Output Signal Amplitude Change: Less than 0.1% with any or all other outputs open or shorted.

   2. Output Signal Phase Change: Less than 0.1 nanosecond with any or all other outputs open or shorted.

g. Injected Signal Isolation: With a 1 Vrms signal applied to any output, the signal measured at all other outputs shall be 90 dB or more below the level of the injected signal.

h. Short Term Stability Degradation: $\frac{\Delta f}{f} < 2.5 \times 10^{-13}$ for 1 second averaging.

i. Single Sideband (SSB) Noise: More than 145 dB below the desired signal output when measured in a 1 Hz bandwidth for a frequency 1 kHz or greater from the desired signal output.

j. Change of phase due to temperature: < 10 ps/°C from 15°C to 25°C.

7.3.4 Measuring and Monitoring Subsystem

This section specifies the performance requirements for the Measuring and Monitoring Subsystem.

7.3.4.1 Time and Frequency Measurement and Display

7.3.4.1.1 Coarse Time of Day Measurement

For determining coarse time of day, the WWVB receiver, shall have performance characteristics equal to or better than the requirements given in Table 7-5.

7.3.4.1.2 Fine Frequency and Time Relationships

The performance requirements for the GPS Time Transfer Unit and Loran-C receiver shall be as follows:

a. GPS Time Transfer Unit - The performance characteristics of the GPS Time Transfer Unit shall be as tabulated in Table 7-6.

b. Loran-C Timing Receiver - The Loran-C receiver shall acquire automatically under microprocessor control. Data input shall be by numeric keyboard and function keys. Other performance requirements for the Loran-C Timing Receiver are given in Table 7-7.

Table 7-5. WWVB Receiver Performance Requirements

SIGNAL OUTPUTS:	1.0 MHz SQ. WAVE, 3.4 Vp-p WITH 93 OHM LOAD 1.0 PPS TTL WITH 10% DUTY CYCLE AND POSITIVE GOING ON-TIME, WITH PEAK-TO-PEAK JITTER LESS THAN 2 MICROSECONDS SERIAL OUTPUT PROVIDING TIME OF YEAR
SENSITIVITY:	0.4 MICROVOLTS WITH 50 OHM LOAD
ULTIMATE ACCURACY:	± 0.1 MILLISECOND
UNCERTAINTY DUE TO NOISE:	LESS THAN ± 0.5 MILLISECOND WHEN ATMOSPHERIC SIGNAL TO NOISE RATIO IS -10 dB IN A 1.0 kHz BW AT THE ANTENNA
TIME ZONE SETTING:	REAR PANEL THUMBWHEEL SWITCHES FOR TIME ZONE AND DAYLIGHT SAVINGS TIME ADJUSTMENT
PROPAGATION DELAY SETTING:	REAR PANEL THUMBWHEEL SWITCHES PROVIDING UP TO 99.9 MILLISECONDS DELAY WITH 0.1 MILLI-SECOND RESOLUTION
VISUAL INDICATORS:	PHASE LOCK TIME SYNC

Table 7-6. Global Positioning System Time Transfer Unit Performance Requirements

ELECTRICAL CHARACTERISTICS	
TIMING OUTPUTS ACCURACY STABILITY	 200 NANOSECONDS WITH RESPECT TO UTC (USNO) 15 NANOSECONDS rms FOR TEN-SECOND AVERAGE
PULSE OUTPUT CHARACTERISTICS (2V PEAK WITH 500 OHM LOAD)	2 ISOLATED 1 PPS OUTPUTS. RISE TIME LESS THAN 10 NANOSECONDS
UPDATE RATE	5 TO 2,000 SECONDS
TIMING INPUT (2V PEAK INTO 50 OHMS)	1 PPS RISE TIME LESS THAN 50 NANOSECONDS PULSE WIDTH LESS THAN 100 MICRO-SECONDS
MEASUREMENTS TIME INTERVAL ACCURACY TIME INTERVAL RESOLUTION MEASUREMENT TIMES	 10 NANOSECONDS 1 NANOSECOND, SINGLE SHOT 1 TO 20 SECONDS

Table 7-7. Loran-C Receiver Performance Requirements

RF SENSITIVITY	0.01 MICROVOLTS
RF BANDWIDTH TRACKING ACQUISITION	 40 kHz 4 kHz
RF AGC RANGE	127 dB
DATA OUTPUT	8 DIGITS (LIQUID CRYSTAL DISPLAY)
SIGNAL OUTPUTS PULSE FREQUENCY (PHASE CORRECTED)	 1 PULSE PER SECOND 1 MHz, 10 MHz

7.3.4.1.3 Measuring Equipment

The frequency and time difference between the CTFS and the USNO Master Clock shall be known to a resolution of $\frac{\Delta f}{f} = \pm 1 \times 10^{-13}$ and one nanosecond, respectively. The performance requirements for the measuring and display equipment are specified below.

a. Time Interval Counter. The characteristics of the Electronic Counter used to measure the time difference between CTFS and the USNO Master Clock shall be equal to or better than the counter having the performance specified in Table 7-8. Measurements shall be automatic. The time interval counter shall have the capability to calculate, average, and display standard deviations.

Table 7-8. Time Interval Counter Performance Requirements

INPUT RANGE: DC COUPLED AC COUPLED, 1 MEGAOHM AC COUPLED, 50 OHM	 TO 100 MHz 30 Hz TO 100 MHz 200 kHz TO 100 MHz
TIME INTERVAL A-B: RANGE:	 1 NANOSECOND TO 10^7 SECONDS LSD DISPLAYED 1 NANOSECOND (100 PICOSECONDS USING MEAN TIME INTERVAL AVERAGING)
FREQUENCY:	200 MHz IN CHANNEL A 100 MHz IN CHANNEL B
TIME BASE:	5 OR 10 MHz
CHANNEL INPUT:	SEPARATE OR COMMON A, SWITCHABLE
DISPLAY:	12 DIGIT DISPLAY IN ENGINEERING FORMAT, EXPONENT RANGE OF + 18 TO - 18

b. Linear Phase Detector/Recorder - Performance requirements for the Linear Phase Detector/Recorder are given in Table 7-9.

Table 7-9. Linear Phase Detector/Recorder Performance Requirements

FREQUENCY RANGE: (0.3 Vrms TO 10Vrms)	100 Hz TO 10 MHz
RECORDER:	1 INCH PER HOUR, 1800 STRIKES PER HOUR FULL 12 HOUR VIEW
RESOLUTION:	9° PER MINOR DIVISION
PHASE MEASUREMENT ACCURACY:	87% OF FULL SCALE AT 5 MHz (BETTER AT LOWER FREQUENCIES)
DRIFT MEASUREMENT:	5 NANOSECONDS ABSOLUTE ACCURACY AT ALL FREQUENCIES

7.3.5 Standby Power Supply Performance

The battery power supplies specified in Section 7.2.1.4 and Section 7.2.2.3 shall have a mean service lifetime in the WSC environment of not less than five years. The batteries shall have sufficient capacity, when fully charged, to provide power for a period of at least eight hours, continuously. Recharging time shall not exceed 24 hours. A visual and/or audible alarm shall indicate low-battery condition.

7.4 Interface Requirements

7.4.1 CTFS Systems/Subsystems Interfaces

The CTFS shall interface with the SGLTs, S-band TT&C System (Danzante and Cacique only), and DIS to provide standard frequency and time references for operations of each ground terminal. The CTFS at Danzante shall interface with the SMTF to support software maintenance and operator training.

The CTFS shall interface with the ground terminal facility to provide GMT displays, which shall operate from the NASA one-per-second BCD signals from the time standard, at appropriate places throughout the operations areas of each ground terminal.

7.4.2 CTFS-DIS ADPE Subsystem Interface

The CTFS shall interface with the DIS ADPE Subsystem via the service bus for the transmission of CTFS status data (Danzante and Cacique only).

7.5 Operations Requirements

The CTFS shall operate on a continuous (24 hours a day, 7 days a week) basis.

Failover to redundant equipment shall be automatic or manual.

Setup, including configuration and selection of prime/redundant equipments, shall be manual.

Section 8. Data Interface System (DIS)

8.1 DIS Overview and Architecture

The DIS reference architecture is shown in Figure 8-1. The reference architecture is defined for the purpose of illustrating functional, performance, interface, and operational requirements of the DIS. The actual architecture that is implemented can differ from the reference architecture as long as the functional, performance, interface, and operational requirements of this Section are met. The DIS reference functional flow for each Danzante and Cacique only, is illustrated in Figure 8-2; and for the GDIS at Cacique and GRGT only, in Figure 8-9. The requirements in Section 8 are applicable to the DIS implementation, excluding the GDIS, at each Danzante and Cacique, unless specifically noted otherwise. The requirements for the GDIS implementation, as specified in Section 8.2.17, are applicable to Cacique and GRGT only. The DIS is composed of the following equipment:

a. ADPE Subsystem.

b. TOCC Workstation.

c. Local MMI.

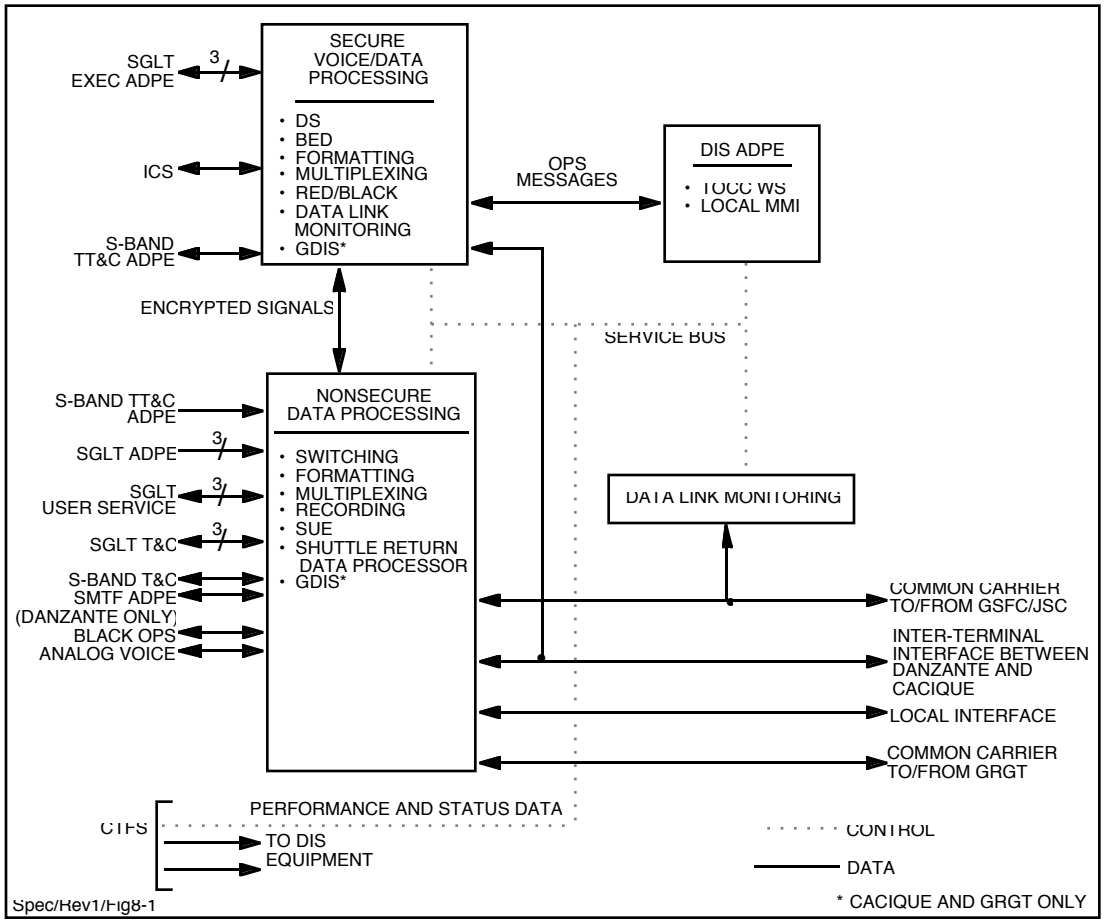

Figure 8-1. DIS Reference Architecture

d. Block Error Detector (BED).

e. Multiplex/Demultiplex Equipment.

f. Security Equipment.

g. Black Data Switch.

h. High Data Rate (HDR) Multiplex Equipment.

i. High Data Rate (HDR) Recorders.

j. Shuttle Return Data Processor.

k. Communications Switch.

l. Shuttle Unique Equipment (SUE).

m. Data Link Monitoring (DLM) Subsystem.

n. Service Bus.

o. Data Splitter/Selector (DS).

p. GDIS (Cacique and GRGT only).

8.1.1 Ground Terminal Interfaces

Interfaces between the DIS and other systems and subsystems (shown on the left side of Figures 8-1, 8-2, and 8-9) shall include connections to the CDCN Executive ADPE Subsystems of the SGLTs, to the Intrasite/Intersite Communications System (ICS), to the Ku-band TT&C Subsystems, to the S-band TT&C System, to the User Service Subsystems of the SGLTs, to the Common Time and Frequency System (CTFS), and to the TOCC.

8.1.2 External Interfaces

External interfaces between the DIS and non-ground terminal facilities shall include interfaces with the inter-terminal link between Danzante and Cacique, GSFC/JSC and GRGT common carriers (CC), and local interfaces.

8.1.3 DIS ADPE Subsystem

The DIS ADPE Subsystem, SGLT Executive ADPE Subsystems, and S-band TT&C ADPE Subsystem shall be interconnected by a Local Area Network (LAN) (see Figure 8-2). The DIS ADPE Subsystem shall interface via the DIS service bus with all other elements of the DIS for the purpose of equipment setup, control and status monitoring, and shall interface via the service bus with the CTFS, at each Danzante and Cacique only, to receive performance and status data. The DIS ADPE Subsystem shall control all DIS subsystems based on SHO's and OPM's from the NCC. The DIS ADPE Subsystem shall include operator interfaces at TOCC workstations and a Local MMI. The Local MMI shall provide the identical display capability as the TOCC workstation. The ADPE and workstation margin requirements and the selection factors of Section 5.6.1 b and c shall apply to the DIS ADPE.

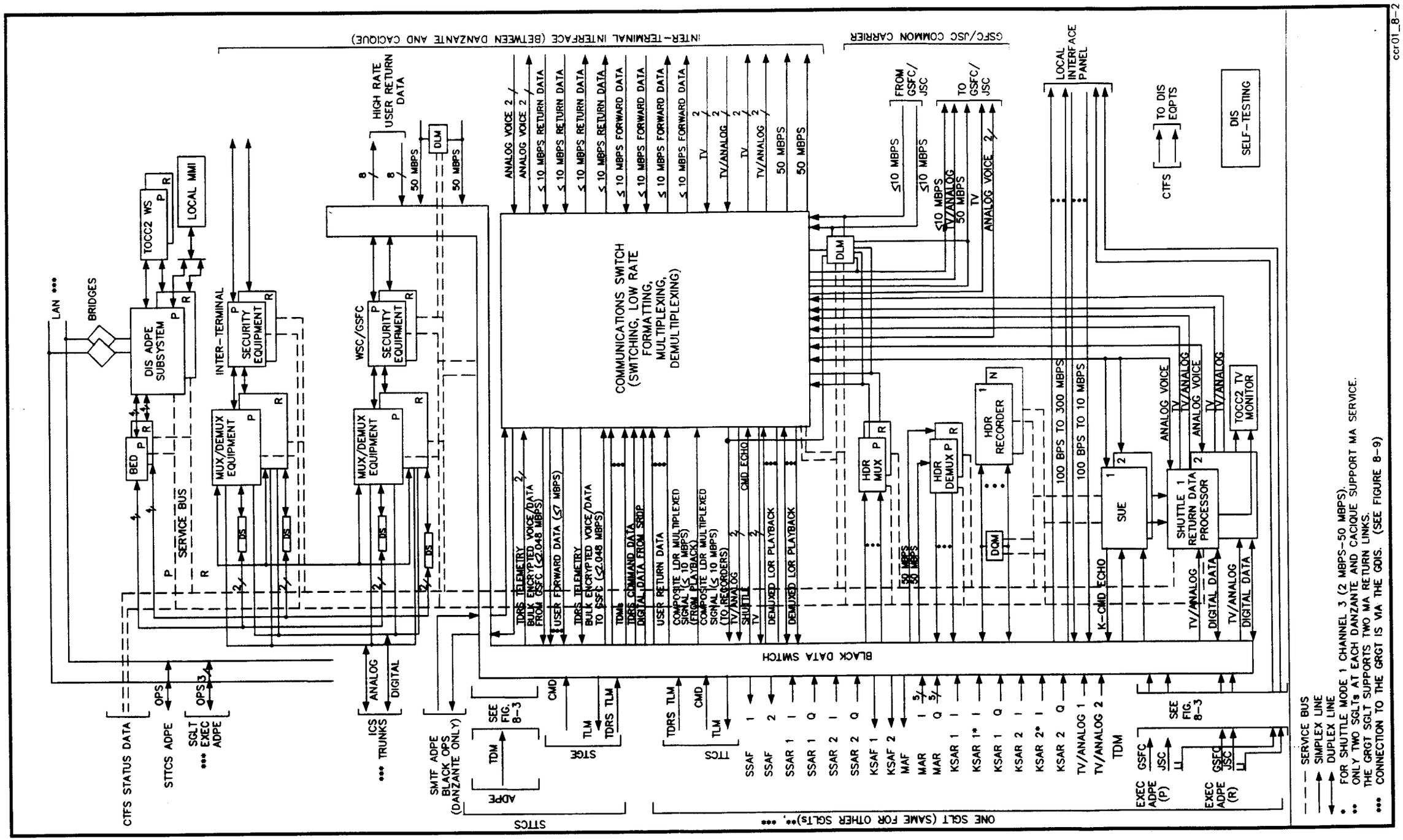

Figure 8-2. DIS Reference Functional Flow

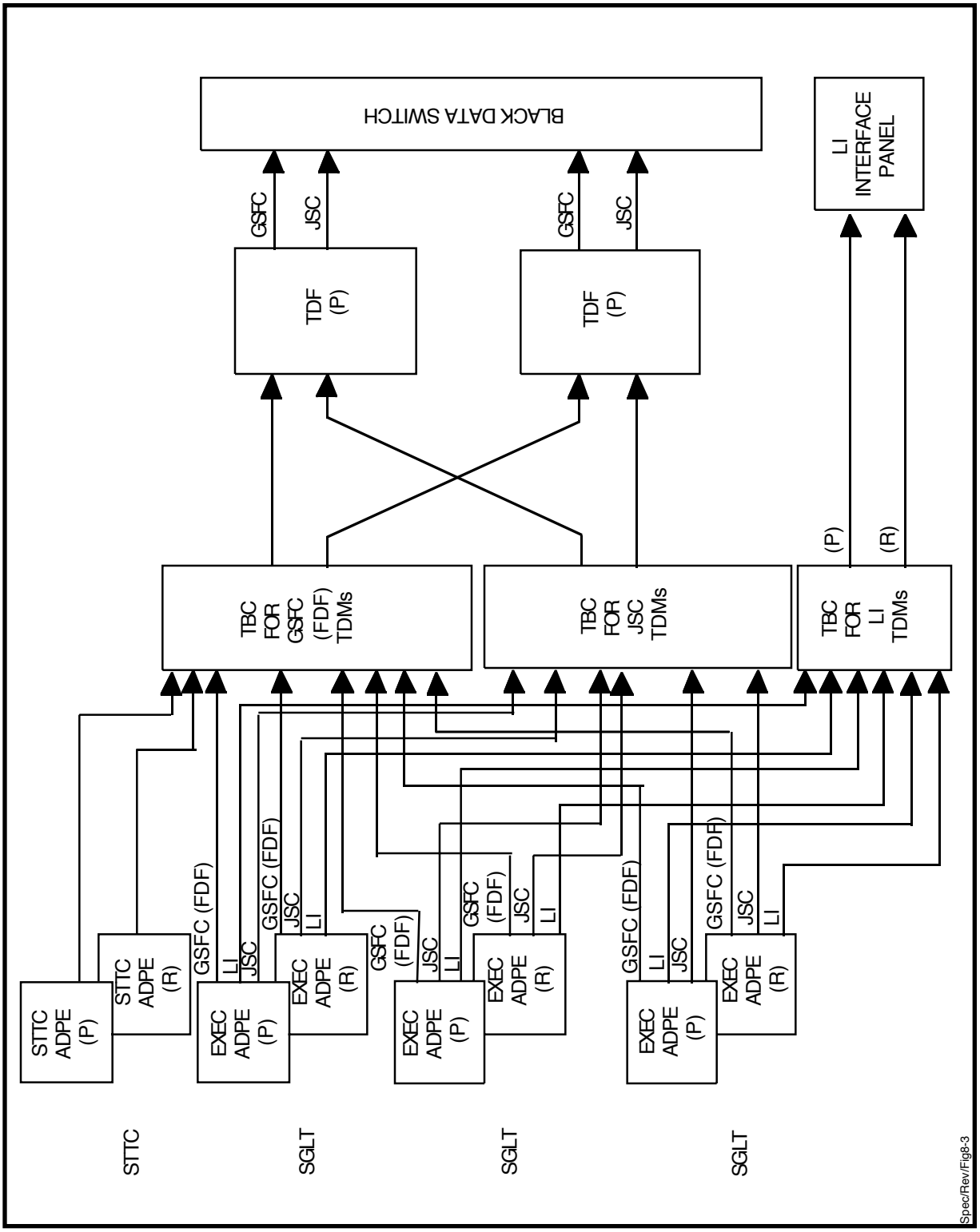

Figure 8-3. TDM Processing Functional Diagram

8.1.4 Secure Voice/Data Processing

The multiplexer/demultiplexer equipment used in processing secure voice/data signals shall be compatible with the GDC-Megamux Plus equipment. Electronic enclosures for the prime and redundant Secure Equipments shall be completely independent. This is to include mounting, cabling, and power sources. The DIS shall provide the architecture depicted in Figure 8-4 for secure voice/data processing between Danzante, Cacique and GSFC.

8.1.4.1 Incoming Secure Voice/Data

Incoming operational voice, facsimile channels, and operational messages (see Figure 8-4), including SHOs and OPMs, shall be received from GSFC via the GSFC/JSC CC interfaces. The incoming operational data (operational message, operational voice, and facsimile channels) shall be received as a composite multiplexed stream embedded in the GSFC 10 Mbps LDR composite signal. The DIS MDM shall demultiplex the operational data channel from the GSFC 10 Mbps LDR composite signal. The incoming operational data shall also contain the Backup Operational data for the other ground terminal.

Backup operational messages, including SHOs and OPMs, shall be received from the other WSC Ground Terminal via the inter-terminal interface. The DIS ADPE shall automatically select operational messages A or backup operational messages A, based on DLM and DIS equipment status. DIS ADPE selection of operational messages B or backup operational message B channels shall be a manual operation.

The secure GSFC operational data shall be routed via the Black Data Switch to either KG-81 or KG-94 decryptors. The independent operational data from the other WSC Ground Terminal shall be connected directly from the inter-terminal interface to the decryptors.

The GSFC decrypted (red) signals shall be demultiplexed by the GSFC secure Mux/Demux equipment. The secure voice and facsimile shall be connected directly to the ICS interface. The operational messages for each Ground Terminal shall be connected directly to the respective DIS ADPE Subsystem. The Backup Operational data messages to the other Ground Terminal shall be connected directly from the GSFC secure Mux/Demux to the inter-terminal secure Mux/Demux for transmission via the inter-terminal interface. A total of two bulk encrypted signals shall be decrypted and demultiplexed by separate equipment chains, one signal for inter-terminal traffic to the other Ground Terminal and one signal for GSFC traffic to the local Ground Terminal. Only one GSFC and one inter-terminal channel shall be active at any one time.

8.1.4.2 Outgoing Secure Voice/Data

Outgoing operational voice, facsimile channels, and operational messages from the DIS ADPE Subsystem, including SLRs, OPMs and ODMs, to GSFC and the other WSC Ground Terminal, shall be connected to GSFC or inter-terminal secure Mux/Demux equipment (see Figure 8-4).

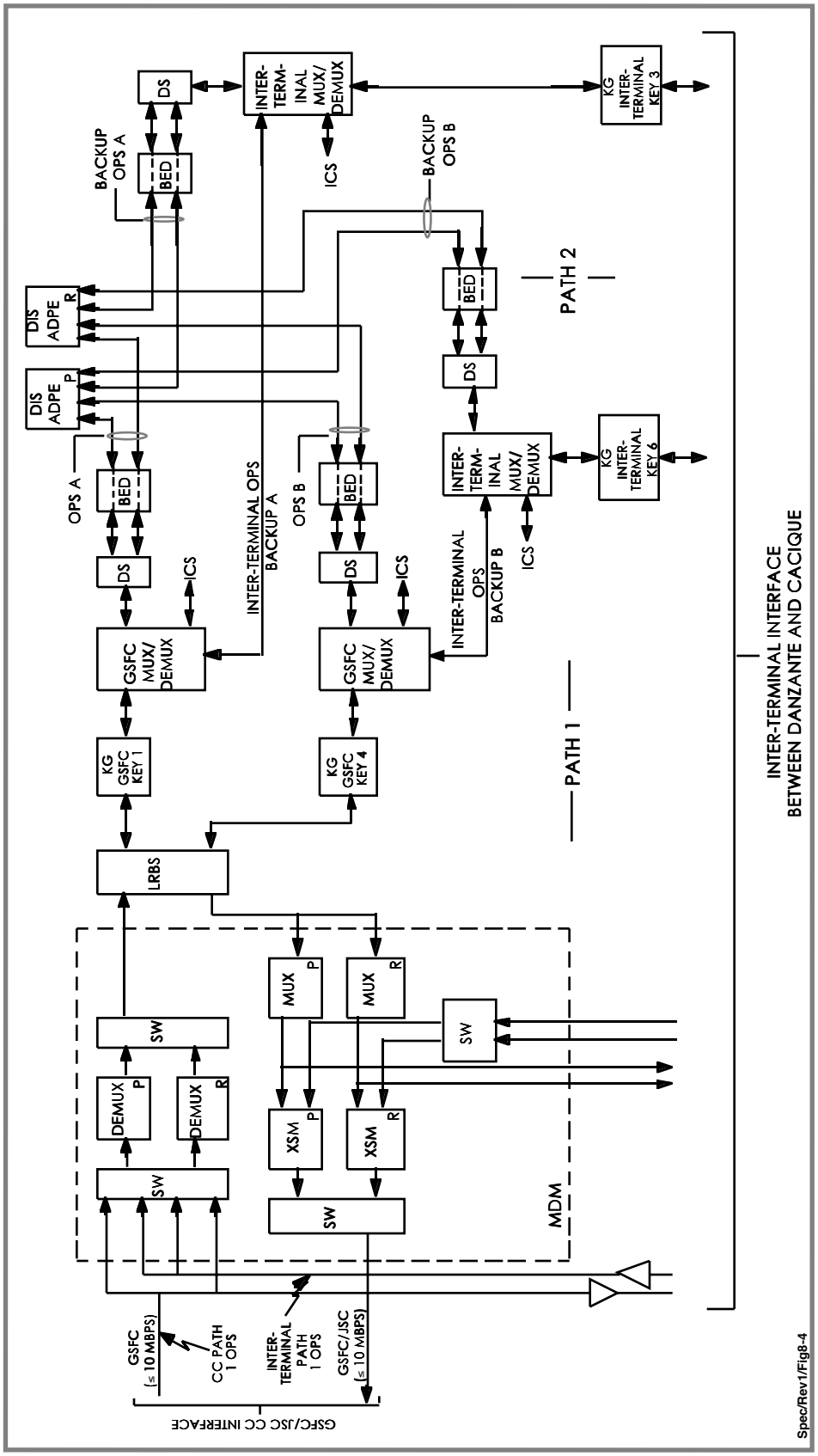

Figure 8-4. DIS Secure Voice/Data Functional Flow

The multiplexed signals shall be bulk encrypted by KG-81 or KG-94 encryptors. The Backup Operational Messages and inter-terminal operational voice and facsimile data shall be routed to the other Ground Terminal via the inter-terminal interface. The GSFC operations data shall be routed via the Black Data Switch to the Communications Switch, where it is multiplexed and routed to the GSFC/JSC CC interfaces. Only one outgoing channel, either GSFC or the inter-terminal secure Mux/Demux equipment, shall be active at any time for the outgoing DIS ADPE operational messages. Outgoing backup operational data messages shall be routed from the inter-terminal secure Demux to the GSFC secure Mux.

8.1.5 Black Data Processing

Black data includes encrypted operations data, customer data (forward and return), TDRS command and telemetry signals, tracking data messages (TDMs), and SMTF black operations data. Black data processing of the encrypted operations data is described in Section 8.1.4. The Black Data Switch provides the connectivity between the SGLT USS, the K-band TT&C Subsystem, the S-band TT&C Subsystem, the SMTF and various DIS subsystems and the CC, inter-terminal and local interfaces. The customer service data rates are given in Figure 8-5.

8.1.5.1 Low Rate Customer Data (≤ 7 Mbps)

The Black Data Switch and the Communications Switch shall provide the capability to transport serial bit-contiguous data (7 Mbps maximum) in both customer forward and customer return directions. The Communications Switch shall be capable of demultiplexing and deblocking low rate data (≤ 7 Mbps) in the customer forward direction, and it shall be capable of blocking and multiplexing low rate data in the customer return direction as shown in Figure 8-6. The block format shall be consistent with that specified in Appendix C.

Low rate customer forward data shall be demultiplexed in the Communications Switch from separate composite signals from GSFC and from JSC received at the GSFC/JSC CC interfaces (see Figure 8-6). The forward data shall be converted to serial bit-contiguous signals at the scheduled customer service rate by the Communications Switch. The Communications Switch shall select which forward data signals shall be provided to the Black Data Switch.

Low rate customer return data shall be routed by the Black Data Switch to the Communications Switch. Customer data supplied (≤ 7 Mbps) to the Communications Switch shall be blocked and multiplexed within the Communications Switch for broadcast transmission to GSFC and JSC via the GSFC/JSC CC interfaces. Shuttle unique equipment (SUE) shall monitor Shuttle voice/data signals and shall provide the voice signals to the Shuttle return data processors. The SUE shall provide for a Shuttle emergency voice capability as described in paragraph 8.2.8.4. The Black Data Switch shall also be capable of routing low rate customer return data to the local interface.

8.1.5.2 High Rate (≤ 300 Mbps) Customer Return Data

Multiplexing capabilities shall be provided in the DIS to handle high rate customer return data. The DIS shall provide the capability (as specified in Appendix C) to multiplex four independent data signals from either ground terminal at rates from 125 kbps to 48 Mbps, resulting in a 48 Mbps maximum aggregate customer traffic load and a 50 Mbps high rate multiplexer for the WSC.

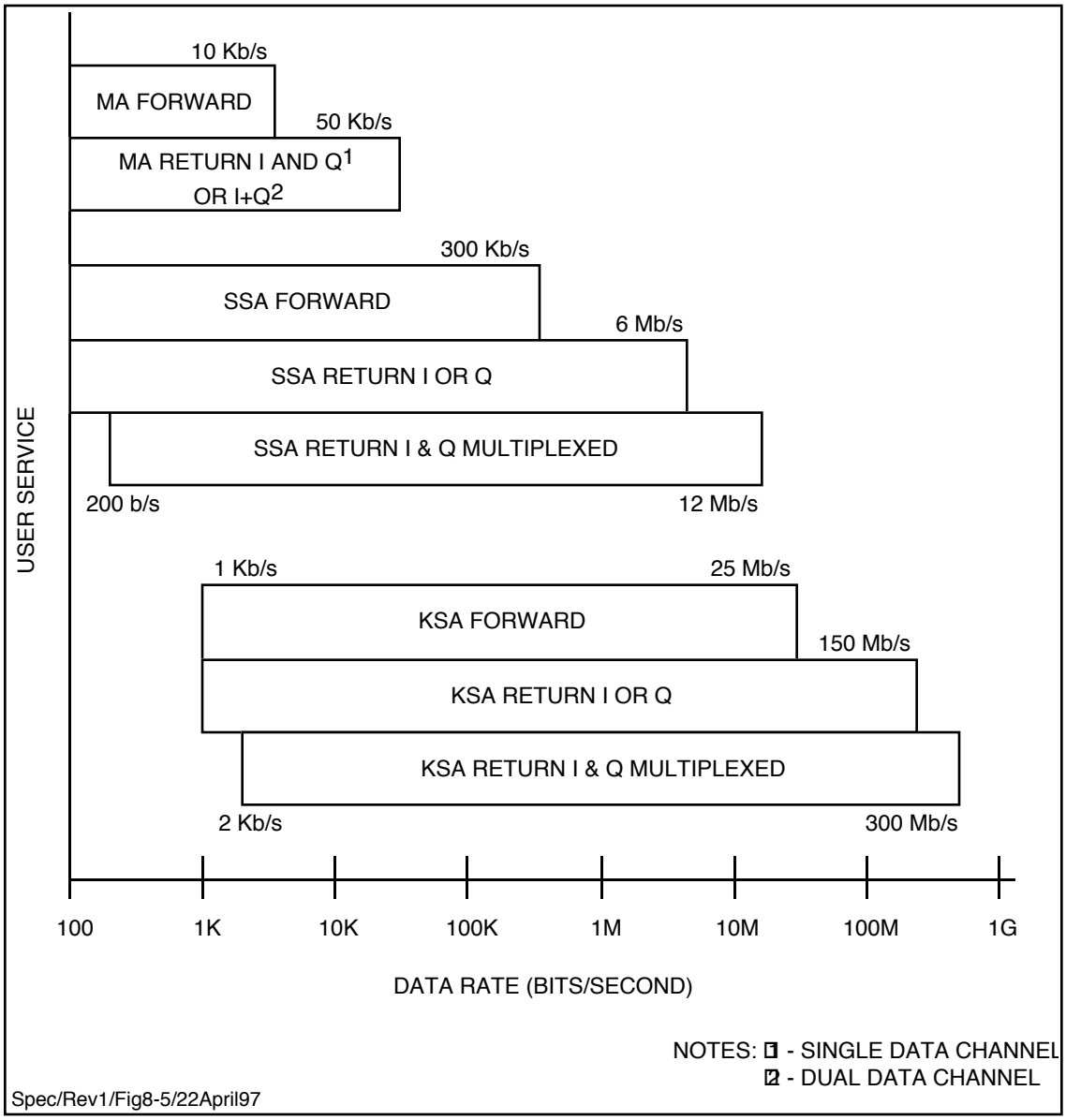

Figure 8-5. Customer Data Rate Ranges

High rate customer return data shall be selected by the Black Data Switch and connected to the high data rate (HDR) recorders and HDR multiplexers for transmission to GSFC and JSC via the GSFC/JSC CC interface. The Black Data Switch shall be capable of routing high rate customer return data to the local interface. The Danzante 50 Mbps composite shall be routed to the GSFC/JSC CC via the inter-terminal interface and the Cacique HDR multiplexer as scheduled in accordance with the 530-ICD-NCC-FDF/WSC. Under operator control, switching of customer return data (≤ 300 Mbps) via the Black Data Switch to and from the the inter-terminal interface shall be provided.

8.1.5.3 Local Interface (LI) Data

Customer return data from 100 bps to 300 Mbps shall be transported via the Black Data Switch to the LI. Customer forward data from 100 bps to 10 Mbps shall be transported via the Black Data Switch from the LI to the SGLT's.

8.1.5.4 Shuttle Return Data

Shuttle TV/Analog data shall be transported via the Video Switch portion of the Black Data Switch, the Shuttle return data processor, and the Communications Switch to the TV/Analog ports of the GSFC/JSC CC and the inter-terminal interfaces. The Shuttle return data processor shall combine and synchronize voice signals from the SUE with the video signals, and shall record the TV and conferenced (forward/return) voice signals. The Shuttle return data processor shall process Shuttle payload interrogator 1.024 MHz subcarrier data and shall forward the data to the Black Data Switch for routing via the Communications Switch to the GSFC/JSC CC interface. The Shuttle return data processor shall process digital data on the Shuttle analog Channel and shall return the data to the Black Data Switch for routing via the Communication Switch to the GSFC/JSC CC interface.

8.1.5.5 TDRS Telemetry and Command Signals

TDRS incoming telemetry and outgoing command encrypted or clear signals shall be routed by the Black Data Switch between S-band or SGLT K-band TT&C systems and the Communications Switch for transmission to and reception from GSFC/JSC CC interfaces. These data signals shall be multiplexed and demultiplexed in the same manner as customer forward and return data (as shown in Figure 8-6).

The capability of connecting outgoing nonencrypted TDRS telemetry to the Communications Switch shall be provided (see Figure 8-2). Manual switching shall be provided to connect any two nonencrypted TDRS telemetry inputs from: the prime or redundant SGLT TTCSs, the prime or redundant STTCS, and any two selected nonencrypted TDRS telemetry outputs from the other ground terminal.

8.1.5.6 High Data Rate (HDR) Recording and Playback

HDR recorders shall provide recording for data rate buffering and playback of high rate customer return data and for protection of such data in the event of GSFC/JSC CC transmission failures. The HDR recorders shall provide rate adaptation to playback the high rate customer data at ≤ 48 Mbps for transmission of any recorded data rate ≤ 150 Mbps. The playback shall be multiplexed with other customer high rate data in the high rate multiplexer.

The HDR recorders shall provide the capability to record and playback the composite multiplexed signal (≤ 10 Mbps) output from the Communications Switch. The playback shall be demultiplexed into individual channels for multiplexing with other return data within the Communications Switch.

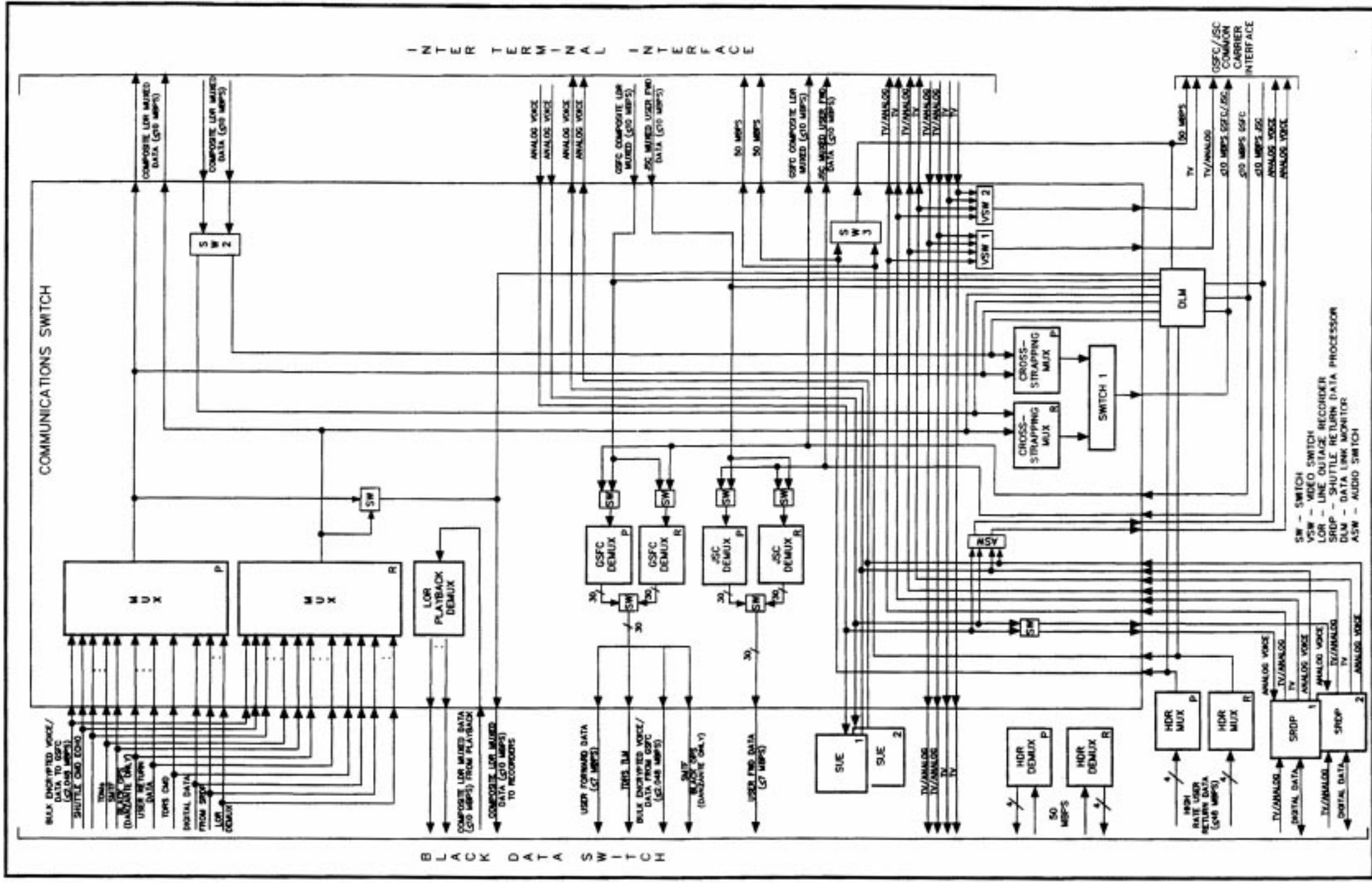

Figure 8-6. Communications Switch Functional Flow

8.1.5.7 TDM Processing

The SGLT Executive ADPE Subsystems, including the GRGT SGLT Executive ADPE Subsystem, shall transmit formatted GSFC TDMs to the GSFC TDM Block Concentrator (TBC) and formatted JSC TDMs to the JSC TBC, as shown in Figure 8-3. Each TBC shall multiplex the TDMs received from the SGLT Executive ADPE Subsystems into a single data stream. TDMs from the S-band TT&C ADPE Subsystem shall be routed to the GSFC TBC to be multiplexed into the single data stream. The Tracking Data Formatter (TDF) shall receive multiplexed GSFC TDMs from the GSFC TBC and multiplexed JSC TDMs from the JSC TBC. The TDF will perform format checking on TDMs input to it. The TDMs output from the TDF shall be routed to the Black Data Switch. Local Interface (LI) TDMs shall be routed via the LI TBC to the Local Interface Panel and nowhere else. LI TDMs shall not pass through the GSFC or JSC TBC/TDF or Black Data Switch.

All TDMs shall be in the 4800-bit blocked format specified in 530-ICD-NCC-FDF/WSC. In the Black Data Switch, all TDMs destined for GSFC and JSC shall be routed to the Communications Switch. In the Communications Switch, GSFC and JSC TDMs shall be processed (with link control information) and multiplexed with other return data for transmission via the GSFC/JSC CC Interfaces

TBC and TDF data interfaces shall be designed to allow manual bypassing of the respective chassis without performance degradation. A control and monitoring interface between the DIS ADPE Subsystem and either the TBC or TDF is not required. The TBCs and TDFs shall operate in local control mode and shall be monitored and controlled from their respective front panels. TDF interface types are contained in 532-FPR-TDF, Functional and Performance Requirements for the Tracking Data Formatter.

8.1.5.8 Black OPS Processing (Danzante Ground Terminal Only)

Black OPS shall be routed by the Black Data Switch between the SMTF ADPE (via the SMTF BED) and the Communications Switch for transmission to and reception from GSFC/JSC CC interfaces when the SMTF ADPE is running in the Black mode. The Black OPS format shall be formatted as 4800-bit blocked data as specified in 530-ICD-NCC-FDF/WSC. The DIS equipment setup for processing of Black SMTF OPS shall be via operator control.

8.1.5.9 Customer Unique Equipment

Normal customer data is processed to baseband and provided to the customer by the permanently installed Data Interface Subsystem (DIS) hardware. This hardware is automated and configured by Schedule Orders (SHOs) sent by NCC.

The Ground Terminal shall include the capability to interface unique customer processing equipment. Customer unique equipment shall not require commanding or statusing by the Ground Terminal ADPE.

The implementation for special customer unique processing capabilities shall be developed on a case by case basis by representatives from NASA, WSC, and customer personnel. The result of this coordination shall be documented in an approved Interface Control Document (ICD).

8.1.6 Data Link Monitoring (DLM)

The DLM Subsystem shall monitor the outgoing composite multiplexed data signal (≤ 10 Mbps each) to the GSFC/JSC CC interface and the incoming composite data signals (≤ 10 Mbps each) from the GSFC/JSC CC interfaces. The DLM subsystem shall also monitor the outgoing composite multiplexed data streams entering the cross-strapping multiplexers, the multiplexed data being sent to the recorders, the outputs of the HDR multiplexers, the inputs (50 Mbps) to the HDR demultiplexers from the inter-terminal interface, and the high data rate (50 Mbps) data streams to the inter-terminal interface and the GSFC/JSC CC interface. The DLM subsystem, in conjunction with the DIS ADPE subsystem, shall support the selection of prime/redundant equipment in the DIS and the selection of GSFC/JSC CC interfaces as shown in Figures 8-2 and 8-6.

8.1.7 DIS Modular Expandability

The implementation of the DIS shall provide for modular expandability of throughput and interfaces without service interruption of existing equipment. Expandability shall include but not be limited to:

a. Installation of additional CC interfaces to support increased throughput.

b. Increasing the data rates of forward service support from 7 Mbps to 25 Mbps.

c. Expansion of the Communications Switch low rate multiplexer input ports to 128 and the low rate demultiplexer output ports to 64 per demultiplexer.

d. Increasing GRGT user data transport capabilities to those specified for low rate customer forward and return data in Section 8.1.5.1 and for high rate customer return data up to 50 Mbps.

8.1.8 GDIS (Cacique and GRGT only)

The GDIS, at each Cacique and GRGT, shall provide the capability to process and transport secure and Black data between Cacique and GRGT. The GDIS shall perform the following functions in support of the GDIS reference architecture and functional flow as shown in Figure 8-9:

a. Multiplexing and demultiplexing of all data transmitted between Cacique and GRGT.

b. Encryption and decryption of all secure data transmitted between Cacique and GRGT.

c. Multiplexing and demultiplexing of all secure data prior to encryption and decryption, as necessary, to minimize the number of cryptographic devices required.

d. Processing of Shuttle return TV and digital data.

8.2 DIS Functional Requirements

The DIS shall execute the following functions:

a. DIS Equipment Setup, Control and Monitoring.

b. Block Encoding/Decoding.

c. Secure Voice/Data Multiplexing and Demultiplexing.

d. Encryption/Decryption.

e. Black Data Port Selection.

f. Communications Switching.

g. Low Rate Data Multiplexing and Demultiplexing.

h. Shuttle Return Data Processing.

i. High Data Rate Multiplexing.

j. High Data Rate Recording/Playback.

k. Data Link Monitoring.

l. Transmission Protocol with NCC.

m. DIS Self-Testing.

n. CTFS Monitoring.

o. GDIS (Cacique and GRGT only).

8.2.1 DIS Equipment Setup, Control and Monitoring

The DIS ADPE Subsystem shall receive SHOs and OPMs from NCC by means of messages addressed to each ground terminal and received via GSFC/JSC CC and inter-terminal interfaces. The incoming messages shall be decrypted, demultiplexed, and directed to the DIS ADPE Subsystem.

The DIS ADPE Subsystem shall command and control all DIS equipments, except the KG-81 or KG-94 security equipment, the BEDs, the TDM Block Concentrator (TBC) and the Tracking Data Formatter (TDF), in response to information from NCC, utilizing DIS equipment status information maintained by the DIS ADPE Subsystem. Only front panel control of the KG-81 or KG-94, TBC and TDF will be available. The DIS ADPE Subsystem shall maintain status information from the CTFS, shall maintain status information on the KG-81 or KG-94 security equipment, and shall control and maintain status information on the following DIS equipments.

a. Black Data Switch.

b. Communications Switch.

c. Low Rate Data Multiplex/Demultiplex Equipment.

d. Security Equipment.

e. Secure Multiplex/Demultiplex Equipment.

f. HDR Recording Units.

g. DLM Subsystem.

h. SUEs.

i. Shuttle Return Data Processors.

j. HDR Multiplexers.

k. Service Bus.

l. Data Splitter/Selector (DS).

The DIS ADPE at Cacique shall perform command and control. The DIS ADPE at Cacique shall not be required to maintain status information on the GRGT GDIS and the GRGT CTFS.

The DIS ADPE Subsystem shall disseminate schedule and control information to DIS operations personnel at the DIS TOCC workstation. The DIS ADPE Subsystem shall dynamically allocate DIS resources, as required, for scheduled activities.

The DIS ADPE Subsystem shall monitor the status of all DIS equipment elements at least every second. Status information shall be received at 1-second intervals. The DIS ADPE Subsystem shall analyze this status information to determine if a fault condition exists that warrants a prime-to-redundant failover. Upon such determination, the DIS ADPE Subsystem shall initiate failover procedures in accordance with operational requirements as specified in Section 8.5. The DIS ADPE Subsystem shall report CTFS fault information to the DIS TOCC workstation. The DIS ADPE Subsystem shall provide DIS equipment status, configuration, health, and performance data for inclusion in the Service Level Status Report (SLR) transmitted to the NCC.

The DIS ADPE Subsystem shall log all SHOs, OPMs, ODMs, SLRs, and all DIS and CTFS equipment setup, configuration, and status information. The DIS ADPE Subsystem shall also support the generation of management reports and TOCC displays regarding scheduled DIS activities and resource allocations.

The DIS ADPE Subsystem shall provide the operator with the capability to isolate and resolve internal DIS failures/faults. The DLM subsystem shall provide measured GSFC/JSC CC interface, inter-terminal interface, Communications Switch multiplexer, and HDR multiplexer performance parameters to the DIS ADPE Subsystem for monitoring the GSFC/JSC CC and DIS equipment operation. The control of switches (except the video switches) shown in Figure 8-6 shall be performed by the DIS ADPE based on DLM subsystem input. The control of the video switches shall be performed by the DIS ADPE based on status of the Shuttle Return Data Processors. Indications of hard failures shall cause automatic control of switches. Performance degradation indications shall be presented to the TOCC for operator initiated control of switches.

The DIS Service Bus shall provide the interface between the DIS ADPE Subsystem and the DIS and CTFS equipments. The DIS Service Bus shall comply with MIL-STD-1553B.

8.2.2 Block Encoding/Decoding

The BED will compute polynomial check digits and insert them into the NASCOM TDRSS 4800 bit blocks for outgoing operations messages. The BED will check the polynomial check digits of all incoming messages and provide block error status to the DIS ADPE to support protocol processing as specified in 530-ICD-NCC-FDF/WSC.

8.2.3 Local Area Network (LAN) Connections

The DIS ADPE Subsystem shall process the operational messages received from NCC, extract data required for operation and control of the DIS, and forward data required by the Executive ADPE Subsystems (including the GRGT Executive ADPE Subsystem), S-band TT&C ADPE Subsystem, and the TOCC via the LAN. Table 8-1 lists the LAN connectivity requirements. The selection of primary or redundant LAN connections shall be based on equipment status.

Table 8-1. Connectivity Requirements for Local Area Network

SIGNAL	FROM	TO
OPERATIONAL DATA MESSAGES FROM SGLTs, S-BAND TT&C ADPE SUBSYSTEM, AND TOCC	SGLT EXEC ADPEs, S-BAND TT&C ADPE, TOCC	DIS ADPE-P, R
OPERATIONAL DATA MESSAGES TO SGLTs, S-BAND TT&C ADPE SUBSYSTEM, AND TOCC	DIS ADPE-P, R	SGLT EXEC ADPEs, S-BAND TT&C ADPE, TOCC
NOTES IN ANY ROW, ALL FROM/TO CONNECTIVITIES SHALL BE AVAILABLE. THESE REQUIREMENTS INCLUDE CONNECTIVITY BETWEEN THE CACIQUE DIS ADPE AND THE GRGT SGLT EXEC ADPE.		

8.2.3.1 TOCC Messages

The DIS ADPE Subsystem shall process and route OPM Class 01 messages to the TOCC.

8.2.4 Secure Voice/Data Multiplexing and Demultiplexing

Outgoing operational voice/data signals shall be multiplexed into a composite data signal (rate ≤ 2.048 Mbps) for transmission to the inter-terminal interface and GSFC. All incoming operational voice/data signals shall be demultiplexed from a composite data signal (rate ≤ 2.048 Mbps) from the inter-terminal interface and GSFC. Separate multiplexer-demultiplexer equipment shall be used for communication with each remote location. The multiplexer-demultiplexer equipments shall be fully interoperable with GDC-Megamux Plus equipments used at the remote locations. ICS trunks shall be connected to the secure multiplexer/demultiplexer equipment. The connectivity requirements for GSFC and inter-terminal Multiplexer/Demultiplexer equipment are given in Table 8-2.

The selection of primary and redundant connections shall be based on equipment status. The secure multiplexer/demultiplexer equipment shall provide for remote configuration via the DIS ADPE.

8.2.5 Bulk Encryption/Decryption

Bulk encryption/decryption shall be provided to secure voice and to protect operational data. Each multiplexed operational data stream shall be bulk encrypted/decrypted in KG-81 or KG-94 equipments. Separate equipment chains shall be used for inter-terminal and GSFC traffic. Only front panel control of the KG-81 or KG-94s will be available [Ref. Doc. CSESD-40A, Communications Security Equipment Systems Document for KG-81, and Doc. CSESD-50, Communications Security Equipment Systems Document for KG-94].

Table 8-2. Connectivity Requirements for GSFC/Inter-Terminal Mux/Demux

SIGNAL	FROM	TO
OPERATIONAL DATA MESSAGES FROM GSFC	PORTS OF THE GSFC DEMUX AND IFL DEMUX	DS; BED/DIS ADPE-P, R
OPERATIONAL DATA MESSAGES TO GSFC	DIS ADPE/BED-P, R; DS	PORTS OF THE GSFC AND INTER-TERMINAL MUX
OPERATIONAL VOICE, TELETYPE AND FACSIMILE	ICS TRUNKS i = 1-12	PORT i OF THE GSFC AND INTER-TERMINAL MUX
OPERATIONAL VOICE, TELETYPE AND FACSIMILE	PORT i OF THE GSFC AND INTER-TERMINAL DEMUX	ICS TRUNKS i = 1-12
BACKUP OPERATIONAL DATA MESSAGES FROM GSFC TO OTHER WSC GROUND TERMINAL	GSFC DEMUX PORT	INTER-TERMINAL MUX PORT
BACKUP OPERATIONAL DATA MESSAGES TO GSFC FROM OTHER WSC GROUND TERMINAL	INTER-TERMINAL DEMUX PORT	GSFC MUX PORT
TDRS TELEMETRY TO GSFC/NCC	TTCS, STTCS	PORTS OF THE GSFC AND INTER-TERMINAL MUX
SMTF ADPE OPS (BLACK) FROM GSFC (DANZANTE ONLY)	PORTS OF THE GSFC DEMUX AND INTER-TERMINAL DEMUX	BED/SMTF ADPE-P, R
SMTF ADPE OPS (BLACK) TO GSFC (DANZANTE ONLY)	BED/SMTF ADPE-P, R	PORTS OF THE GSFC MUX AND INTER-TERMINAL MUX
NOTE IN ANY ROW, ALL FROM/TO CONNECTIVITIES SHALL BE AVAILABLE.		

8.2.6 Black Data Port Selection

Customer data ports, operations data ports, TDM ports and TDRS T&C data ports at the DIS/SGLT and DIS/STTCS interfaces shall be selected by the DIS ADPE Subsystem via control of the Black Data Switch and shall be connected as required to the Communications Switch, local interface, HDR multiplexers, HDR recorders, SUEs, and Shuttle Return Data Processors. The GRGT customer data ports, TDM ports, and TDRS T&C data ports at the Cacique GDIS interface shall be selected by the Cacique DIS ADPE subsystem, via control of the Black Data Switch, and shall be connected as required to the Communications Switch, local interface, SUEs, and the SRDPs at Cacique. The Black Data Switch connectivity requirements are listed in Table 8-3. The connectivity of the Black Data Switch shall be determined by the DIS ADPE Subsystem using the contents of SHOs and OPMs. The selection of primary or redundant connections shall be based on equipment status.

In the Danzante Ground Terminal only, SMTF ADPE Black OPS ports shall be selected by the DIS ADPE Subsystem via control of the Black Data Switch and shall be connected, as required, to the Communications Switch. Connectivity of Black SMTF OPS shall be set up by the operator. For all low rate data, the Black Data Switch shall be capable of adding new switch connections to an existing switch connection without breaking the original connection.

Table 8-3. Connectivity Requirements for Black Data Switch

SIGNAL	FROM[7]	TO[1,7]
CUSTOMER FORWARD DATA (100 bps-300 kbps)	COMMUNICATIONS SWITCH GSFC DEMULTIPLEXER OUTPUT PORTS	SSAF 1 AND 2 INPUT PORTS OF SGLT's, SUE-1, 2 FORWARD INPUT[2]
CUSTOMER FORWARD DATA (100 bps-300 kbps)	LOCAL INTERFACE FORWARD PORTS	SSAF 1 AND 2 INPUT PORTS OF SGLT' s
CUSTOMER FORWARD DATA (1 kbps-7 Mbps)	COMMUNICATIONS SWITCH GSFC DEMULTIPLEXER OUTPUT PORTS	KSAF 1 AND 2 INPUT PORTS OF SGLT's, SUE-1, 2 FORWARD INPUT[2]
CUSTOMER FORWARD DATA (1 kbps-10Mbps)	LOCAL INTERFACE FORWARD PORTS	KSAF 1 AND 2 INPUT PORTS OF SGLT's
CUSTOMER FORWARD DATA (100 bps-300 kbps)	COMMUNICATIONS SWITCH JSC DEMULTIPLEXER OUTPUT PORTS	SSAF 1 AND 2 INPUT PORTS OF SGLT's, SUE-1, 2, FORWARD INPUT[2]
CUSTOMER FORWARD DATA (1 kbps-7 Mbps)	COMMUNICATIONS SWITCH JSC DEMULTIPLEXER OUTPUT PORTS	KSAF 1 AND 2 INPUT PORTS OF SGLT's, SUE-1, 2 FORWARD INPUT[2]
CUSTOMER RETURN DATA (100 bps-7 Mbps)	SGLT SSAR-1 AND 2 (I, Q, I&Q MULTIPLEXED)	COMMUNICATIONS SWITCH MULTIPLEXER INPUT PORTS, SUE-1, 2 RETURN INPUT, LOCAL INTERFACE[4]
CUSTOMER RETURN DATA (1 kbps-7 Mbps)	SGLT KSAR-1 AND 2 (I, Q, I&Q MULTIPLEXED)	COMMUNICATIONS SWITCH MULTIPLEXER INPUT PORTS, SUE-1, 2 RETURN INPUT, LOCAL INTERFACE, SHUTTLE RETURN DATA PROCESSOR 1, 2[4]
BULK ENCRYPTED VOICE/DATA FROM GSFC (≤ 2.048 Mbps)	COMMUNICATIONS SWITCH GSFC DEMULTIPLEXER OUTPUT PORT	GSFC DECRYPTOR-P, R

Table 8-3. Connectivity Requirements for Black Data Switch (Cont'd)

SIGNAL	FROM[7]	TO[1,7]
BULK ENCRYPTED VOICE/DATA FROM GSFC (≤ 2.048 Mbps)	GSFC DECRYPTOR-P, R	COMMUNICATIONS SWITCH MULTIPLEXER INPUT PORT
GSFC AND JSC TRACKING DATA MESSAGES	SGLT EXECUTIVE ADPE's VIA THE TBC/TDF	COMMUNICATIONS SWITCH MULTIPLEXER INPUT PORTS
TRACKING DATA MESSAGES	S-BAND TT&C ADPE VIA THE GSFC TBC/TDF	COMMUNICATIONS SWITCH MULTIPLEXER INPUT PORTS
SMTF ADPE OPS (BLACK) TO GSFC (DANZANTE ONLY)	BED/SMTF ADPE-P, R	COMMUNICATIONS SWITCH MULTIPLEXER INPUT
SMTF ADPE OPS (BLACK) FROM GSFC (DANZANTE ONLY	COMMUNICATIONS SWITCH GSFC DEMULTIPLEXER OUTPUT PORT	BED/SMTF ADPE-P, R
TDRS COMMAND DATA	SGLT's TTCS; STTCS	COMMUNICATIONS SWITCH MULTIPLEXER INPUT PORTS
TDRS TELEMETRY DATA	COMMUNICATIONS SWITCH DEMULTIPLEXER OUTPUT PORTS	SGLT TTCS; STTCS[3]
CUSTOMER FORWARD DATA (7 Mbps-25 Mbps)	PROVISIONS FOR FUTURE ADDITION OF COMMUNICATION SWITCH PORTS FOR HIGH RATE FORWARD CUSTOMER DATA	SGLT KSAF-1, 2
SHUTTLE RETURN DATA MODE-1, CHANNEL 3 (2 Mbps-48 Mbps)[6]	SGLT KSAR-1, 2 (I)	COMMUNICATIONS SWITCH MULTIPLEXER INPUT PORTS, HDR MUXs, ANY HDR RECORDER, INTER-TERMINAL INTERFACE PORTS[5]
CUSTOMER RETURN DATA (7 Mbps-12 Mbps)	SGLT SSAR-1, 2 (I, Q, I&Q MULTIPLEXED)	HDR MUXs, ANY HDR RECORDER, LOCAL INTERFACE, INTER-TERMINAL INTERFACE PORTS[5]
SHUTTLE K-BAND COMMAND ECHO DATA (72 kbps)	SUE	COMMUNICATIONS SWITCH MULTIPLEXER INPUT PORTS
CUSTOMER RETURN DATA (7 Mbps-150 Mbps)	SGLT KSAR-1, 2 (I, Q, I&Q MULTIPLEXED)	HDR MUXs, ANY HDR RECORDER, LOCAL INTERFACE, INTER-TERMINAL INTERFACE PORTS[5]
CUSTOMER RETURN DATA (150 Mbps-300 Mbps)	SGLT KSAR-1, 2 (I&Q MULTIPLEXED)	LOCAL INTERFACE
SHUTTLE RETURN TV/ANALOG DATA	SGLT KSAR-1, 2 TV/ANALOG	SHUTTLE RETURN DATA PROCESSOR-1, 2

Table 8-3. Connectivity Requirements for Black Data Switch (Cont'd)

SIGNAL	FROM[7]	TO[1,7]
SHUTTLE RETURN TV/ANALOG DATA	COMMUNICATIONS SWITCH TV/ANALOG AND TV ONLY OUTPUT PORTS	SHUTTLE RETURN DATA PROCESSOR-1, 2
SHUTTLE ANALOG CHANNEL DIGITAL DATA	SHUTTLE RETURN DATA PROCESSOR-1, 2	COMMUNICATIONS SWITCH MULTIPLEXER INPUT PORTS
SHUTTLE ANALOG CHANNEL DIGITAL DATA	COMMUNICATIONS SWITCH TV/ANALOG AND TV ONLY OUTPUT PORTS	SHUTTLE RETURN DATA PROCESSOR-1, 2
SHUTTLE PAYLOAD INTERROGATOR 1.024 MHz SUBCARRIER DATA	SHUTTLE RETURN DATA PROCESSOR-1, 2	COMMUNICATIONS SWITCH MULTIPLEXER INPUT PORTS
SHUTTLE PAYLOAD INTERROGATOR 1.024 MHz SUBCARRIER DATA	COMMUNICATIONS SWITCH TV/ANALOG AND TV ONLY OUTPUT PORTS	SHUTTLE RETURN DATA PROCESSOR-1, 2
COMPOSITE LDR MULTIPLEXED SIGNAL (≤ 10 Mbps)	COMMUNICATIONS SWITCH MULTIPLEXER OUTPUT	ANY OF N HDR RECORDER INPUTS[5]
COMPOSITE LDR MULTIPLEXED SIGNAL (≤10 Mbps)	ANY HDR RECORDER PLAYBACK OUTPUT	COMMUNICATION SWITCH FOR LDR PLAYBACK DEMULTIPLEXER INPUT
HDR MULTIPLEXED SIGNAL (50 Mbps)	INTER-TERMINAL INTERFACE PORTS	HDR DEMULTIPLEXER INPUT PORTS
CUSTOMER RETURN DATA (125 kbps-48 Mbps)	HDR DEMULTIPLEXER OUTPUT PORTS	HDR MULTIPLEXER INPUT PORTS
CUSTOMER RETURN DATA (100 bps-7 Mbps)	LOR PLAYBACK DEMULTIPLEXER OUTPUT PORTS	COMMUNICATIONS SWITCH MULTIPLEXER INPUT PORTS
CUSTOMER FORWARD DATA (100 bps-10 kbps)	COMMUNICATIONS SWITCH GSFC DEMULTIPLEXER OUTPUT PORTS	MAF INPUT PORTS OF SGLT(TWO SGLTs AT EACH DANZANTE AND CACIQUE ONLY, AND THE GRGT SGLT)
CUSTOMER FORWARD DATA (100 bps-10 kbps)	LOCAL INTERFACE FORWARD PORTS	MAF INPUT PORTS SGLT (TWO SGLTs AT EACH DANZANTE AND CACIQUE ONLY, AND THE GRGT SGLT)
CUSTOMER RETURN DATA (100 bps-100 kbps)	SGLT MAR-1 THROUGH MAR-5 (I AND Q) (TWO SGLTs AT EACH DANZANTE AND CACIQUE ONLY), AND THE GRGT SGLT MAR-1 AND MAR-2 (I&Q)	COMMUNICATIONS SWITCH MULTIPLEXER INPUT PORTS, LOCAL INTERFACE

Table 8-3. Connectivity Requirements for Black Data Switch (Cont'd)

NOTES
[1]IN ANY ROW, ALL FROM/TO CONNECTIVITIES SHALL BE AVAILABLE.
[2]THE SIGNAL SENT TO ANY SGLT MAY ALSO BE SENT TO SUE-1 OR SUE-2 FORWARD INPUT.
[3]THE TDRS TELEMETRY CONNECTION MATCHES THE COMMAND CONNECTION.
[4]THE SIGNAL SENT TO THE COMMUNICATIONS SWITCH PORT MAY ALSO BE SENT TO SUE-1 OR SUE-2 RETURN INPUT.
[5]THE SIGNAL SENT TO THE HDR MULTIPLEXER MAY ALSO BE SENT TO ANY HDR RECORDER. A SIGNAL MAY BE SENT TO MULTIPLE RECORDERS SIMULTANEOUSLY.
[6]THE COMMUNICATIONS SWITCH MULTIPLEXER INPUT PORT CAN ACCEPT DATA RATES ONLY UP TO 7 Mbps.
[7]ALL INTERFACES BETWEEN THE GRGT SGLT AND CACIQUE EQUIPMENTS SHALL BE VIA THE GDIS (PER TABLE 8-7).

8.2.6.1 High Rate (7 to 25 Mbps) Customer Forward Data

The DIS shall provide for the future addition of facilities for transporting two high rate forward customer data signals per SGLT from the GSFC/JSC CC interfaces to USS KSAF interfaces via the Communications and Black Data Switches.

8.2.6.2 High Rate (7 to 150 Mbps) Customer Return Data

The DIS ADPE Subsystem shall select the high rate return data at the Black Data Switch and route it to an HDR multiplexer and/or an HDR recorder or the local interface. Routing to and from the inter-terminal interface shall be selected by operator input. At the Black Data Switch, the DIS ADPE Subsystem shall also select the signal from an HDR recorder playback port (data buffered to < 48 Mbps) for routing to a HDR Multiplexer input port. High rate customer return data shall be transported from the HDR multiplexers to the Communications Switch at an aggregate rate of 50 Mbps for transmission to the other WSC Ground Terminal via the inter-terminal interface and GSFC/JSC via the GSFC/JSC CC interface.

8.2.6.3 Local Interface Data

The DIS ADPE Subsystem shall control the Black Data Switch to select customer return data from 100 bps to 300 Mbps for transmission to the local interface. The DIS ADPE Subsystem shall control the Black Data Switch to route forward data to the SGLTs and TDMs to the local interface.

8.2.7 Communications Switching

8.2.7.1 General

The Communications Switch functional flows are shown in Figure 8-6. In addition to circuit switching, the Communications Switch shall perform multiplexing and demultiplexing of low rate data to/from GSFC and JSC via the GSFC/JSC CC interfaces. The Communications Switch shall have a total capacity of 75 prime and redundant return data ports and 30 prime and redundant forward data ports from both the GSFC and the JSC demultiplexers. The Communications Switch shall contain a prime and redundant GSFC/JSC multiplexer, a prime and redundant GSFC demultiplexer, a prime and redundant JSC demultiplexer, a prime and redundant cross-strapping multiplexer, and a line outage recorder playback demultiplexer. The signal processing from the multiplexer input port to the output and from the demultiplexer input to the output port shall comply with the requirements of Appendix C to ensure compatibility with the NASA Multiplexer/Demultiplexer (MDM) Data Systems at GSFC and JSC.

All data transferred between the Communications Switch and NASCOM's MDM Data Systems at GSFC and JSC shall be in 4880-bit block formats. The data formats required to be used by the Communications Switch for compatibility with the MDM format are specified in Appendix C.

Circuit assurance blocks shall be received and transmitted between the Communications Switch and the associated remote MDMs for validation of circuit operation. The format of the circuit assurance blocks shall be done in accordance with Appendix C.

8.2.7.1.1 Forward Data

The Communications Switch, under control of the DIS ADPE, shall select the forward ports from the GSFC and JSC demultiplexers to output forward data to the Black Data Switch. Data received from the GSFC/JSC CC interfaces shall be routed to the prime and redundant GSFC and JSC demultiplexers. The DIS ADPE, with assistance from the DIS operator as required, shall select the GSFC/JSC CC inputs to the prime and redundant demultiplexers based on data generated by the DLMs and the prime or redundant outputs based on demultiplexer status.

The Communications Switch shall be capable of demultiplexing and deblocking forward data blocked and multiplexed by NASCOM's MDM Data Systems at GSFC and JSC.

The Communications Switch shall be capable of receiving multiplexed 4880-bit block data from the GSFC/JSC CC interface and transmitting demultiplexed serial bit-contiguous data to the Black Data Switch.

The Communications Switch shall first check the polynomial error code field for validity. After data validity confirmation, the Communications Switch shall strip out the link header, the network header, customer header, time tag, and error check field and transmit serial bit-contiguous data.

During periods of time (intervals greater than one second) when a Communications Switch demultiplexer output port in the customer forward direction is not receiving data from an associated MDM multiplexer, the Communications Switch will receive a circuit assurance block transmitted from the remote MDM, and shall route the blocks to the output port for processing. Circuit assurance blocks shall be inhibited from being transmitted to the Black Data Switch since

their purpose is to validate end-to-end circuit operation only. The DIS TOCC operator shall be alerted to failure to receive the assurance blocks, if they have been scheduled to be transmitted from the associated MDM multiplexer.

8.2.7.1.2 Return Data

Low rate return data from the Black Data Switch shall be connected to input ports of the multiplexers. All return data shall be multiplexed by the Communications Switch, and shall be capable of being demultiplexed and deblocked by NASCOM's MDM Data Systems located at GSFC and JSC.

The Communications Switch shall accept return data in serial bit-contiguous (unblocked) form or 4800-bit blocked form from the Black Data Switch and shall transmit multiplexed 4880-bit blocked data to the GSFC/JSC CC interface as specified in Appendix C.

The Danzante Communications Switch shall accept return black SMTF ADPE OPS in 4800-bit blocked form, as specified in 530-ICD-NCC-FDF/WSC, from the Black Data Switch and shall transmit multiplexed 4880-bit blocked data to the GSFC/JSC CC interface.

The Communications Switch shall also receive composite multiplexed playback data from the HDR recorders via the Black Data Switch. The LOR Playback demultiplexer in the Communications Switch shall demultiplex up to 10 selected channels and these channels shall be multiplexed with other channels in the Communications Switch multiplexer.

After formatting the data into 4880-bit blocks, inserting the appropriate network routing information and generating the polynomial error control information, the Communications Switch shall multiplex the input port data blocks and shall transmit the composite signal to the cross-strapping multiplexers (for transmission via the GSFC/JSC CC interface) and to the inter-terminal interface. The DIS ADPE shall select output from the prime or redundant multiplexers based on data generated by the DLM Subsystem. Indications of hard failures shall cause automatic control of multiplexer switches. Performance degradation indications shall be presented to the TOCC for operator initiated control of switches.

During periods of time (intervals greater than one second) when the Communications Switch multiplexer input port does not have a data block ready for transmission to an associated MDM, the Communications Switch multiplexer shall have the capability to generate and transmit circuit assurance blocks to the remote MDM output port at a rate of one block per second. The circuit assurance blocks, uniquely identified by setting the data length field to zero, provide a confidence check on circuit operation.

8.2.7.2 Communications Switch Control

The DIS ADPE Subsystem shall provide the capability to configure/reconfigure the Communications Switch. Configuration/reconfiguration shall be in response to SHOs and OPMs received from NCC, and shall include changing operating parameters such as data stream IDs and clock rates and selecting operating modes.

The Communications Switch shall also provide operational status information and alarms to the DIS ADPE Subsystem. The DIS ADPE shall provide operational status to NCC via Service Level Status Reports (SLRs).

8.2.7.3 Low Rate Multiplexing Functions

The Communications Switch shall perform the low rate multiplexing functions for customer return data, TDRS command and telemetry data, TDMs, and bulk encrypted operations data as specified in Appendix C. The Danzante Communications Switch shall perform the low rate multiplexing functions for SMTF ADPE return black operations data.

8.2.7.4 Low Rate Data Demultiplexing Functions

The Communications Switch shall perform the low rate data demultiplexing functions for customer forward data, TDRS telemetry, and bulk encrypted operations data as specified in Appendix C. The Danzante Communications Switch shall perform the low rate data demultiplexing functions for SMTF ADPE forward black operations data.

The low rate demultiplexers for the GSFC and JSC composite multiplexed data streams shall provide for 30 output ports each.

The Communications Switch shall also receive multiplexed composite (4880-bit blocks) playback data from the HDR recorders via the Black Data Switch at rates ≤ 10 Mbps. The LOR Playback demultiplexer shall demultiplex up to 10 selected signals and these signals shall be connected to the GSFC/JSC multiplexer input ports for multiplexing with real-time return data.

8.2.7.5 Interface Descriptions

The input and output data, the input and output clock, the composite data and clock signals for the inter-terminal and GSFC/JSC CC interfaces of the Communications Switch multiplexer-demultiplexer are specified in STDN No. 220.30, Interface Control Document (ICD) between the Second TDRSS Ground Terminal (STGT) and Ground Communications Facilities.

8.2.7.6 TDRS Telemetry and Command Data

The Communications Switch shall be capable of blocking TDRS command and nonencrypted telemetry data and deblocking TDRS telemetry data, using the NASCOM TDRSS 4800 bit blocks. The 4800-bit block is defined in Appendix I.

8.2.7.6.1 TDRS Telemetry Data

The TDRS Telemetry data received from GSTDN via GSFC shall be deblocked by the Communications Switch. After deblocking, the data shall be transmitted as bit contiguous data to the TT&C subsystems via the Black Data Switch at a rate of either 999.94 bps or 249.98 bps, as selected by the DIS ADPE.

The nonencrypted TDRS telemetry data transmitted to GSFC shall be received from the TTC subsystems (from either ground terminal) via the Black Data Switch and shall be blocked by the Communications Switch.

8.2.7.6.2 TDRS Command Data

The TDRS command data to GSTDN shall be received from TT&C subsystems via the Black Data Switch at a rate of 2 kbps and shall be blocked by the Communications Switch for transmission to GSTDN via the GSFC interface.

For TDRS command data, the Communications Switch shall format the 4800 bit block shown in Figure 8-7 using information received from the DIS ADPE Subsystem. The Communications Switch return port utilized for TDRS command data shall operate in either the clear mode or the encrypted mode, as specified below:

a. Clear Mode. The continuous 2 kbps NRZ-L data and clock signals shall be received from the Black Data Switch. The Communications Switch shall discard idle (1,0) pattern bits and shall pack each 4800-bit block with an integral number of TDRS command words (40 bits each). The 4800-bit blocks shall be transmitted at a one-block-per-second rate. The Communications Switch shall generate the polynomial error code remainder for each 4800-bit block.

b. Encrypted Mode. The continuous 2 kbps NRZ-M encrypted data and clock signals will be received from the Black Data Switch. The Communications Switch shall handle the NRZ-M data as if it were NRZ-L at the bit level. The Communications Switch shall pack 2000 bits into 4800-bit blocks, which shall be transmitted at a one-block-per-second rate. The Communications Switch shall generate the polynomial error code remainder for each 4800-bit block.

8.2.7.7 Communications Switching Connectivities

The Communications Switch shall be capable of providing the connectivities specified in Table 8-4. Based on data link quality and DIS equipment status information, the DIS ADPE Subsystem shall determine the appropriate prime/redundant path connectivities between all input ports and all output ports and shall display the appropriate connectivities to the DIS TOCC operator. The DIS ADPE Subsystem shall command and control the communications switching equipment configuration to implement the selected connectivities.

8.2.8 Shuttle Unique Functions

Two independent sets of Shuttle Unique Equipment (SUE) shall be capable of providing support for two simultaneous Shuttle missions. Figure 8-8 shows a reference configuration for one SUE. Each SUE shall be capable of simultaneously processing one forward and one return data signal for one Shuttle mission, with forward data rates of 32 kbps, 72 kbps, and 216 kbps and return data rates of 96 kbps and 192 kbps. The forward and return inputs to the SUE, i.e., S-band or K-band, shall be independently selectable from any SGLT, including the GRGT SGLT, utilizing the TOCC DIS Workstation. The Cacique SUE shall be capable of selecting and processing the GRGT SGLT Shuttle data. Each SUE shall be capable of processing Shuttle command echo of

	1	2	3	4	5	6	7	8
1 - 8	NASCOM SYNC							
9 - 16	NASCOM SYNC							
17 - 24	NASCOM SYNC							
25 - 32	SOURCE CODE							
33 - 40	DESTINATION CODE							
41 - 48	BLOCK SEQ. NO.			FORMAT CODE				
49 - 56	SPACECRAFT ID							
57 - 64	SPARE							
65 - 72	MESSAGE TYPE							
73 - 80	SPARE							
81 - 88	S	CH	F	DATA LENGTH				
89 - 96	DATA LENGTH							
97 - 104	INDEX NR							
105 - 112	INDEX NR							
113 - 120	GMT							
121 - 128	GMT							
129 - 136	GMT							
137 - 144	GMT							
145 - 152 NOTE 1 4760 - 4768	DATA (4624 BITS)							
4769 - 4776	SPARE							
4777 - 4784	PF 1	PF 2	POLNOMIAL REMAINDER					
4785 - 4792	POLYNOMIAL REMAINDER							
4793 - 4800	POLYNOMIAL REMAINDER							

Spec/Rev1/Fig.8-7

NOTES:

1. REMAINDER OF DATA FIELD

LEGEND:

S - SPARE
F - FULL BLOCK FLAG, 1 = FULL, 0 = NOT FULL
PF 1 - POLYNOMIAL STATUS FLAG
PF 2 - POLYNOMIAL STATUS FLAG
CH - COMMAND HOLD FLAG

Figure 8-7. GSTDN Command Block

Table 8-4. Connectivity Requirements for Communications Switch

SIGNAL	FROM	TO
BULK ENCRYPTED VOICE/DATA FROM GSFC (≤ 2.048 Mbps)	BLACK DATA SWITCH	COMMUNICATIONS SWITCH MULTIPLEXER INPUT PORT
SMTF ADPE OPS (BLACK) FROM GSFC (DANZANTE ONLY)	GSFC DEMULTIPLEXER OUTPUT PORT	BLACK DATA SWITCH
SMTF ADPE OPS (BLACK) TO GSFC (DANZANTE ONLY)	BLACK DATA SWITCH	COMMUNICATIONS SWITCH MULTIPLEXER INPUT PORT
TRACKING DATA MESSAGES	BLACK DATA SWITCH	COMMUNICATIONS SWITCH MULTIPLEXER INPUT PORT
CUSTOMER FORWARD DATA (≤ 7 Mbps), BULK ENCRYPTED VOICE/DATA FROM GSFC (≤ 2.048 Mbps) AND TELEMETRY DATA	GSFC DEMULTIPLEXER OUTPUT PORTS	BLACK DATA SWITCH
CUSTOMER FORWARD DATA (≤ 7 Mbps)	JSC DEMULTIPLEXER OUTPUT PORTS	BLACK DATA SWITCH
SHUTTLE ANALOG CHANNEL DIGITAL DATA	TV/ANALOG AND TV ONLY INTER-TERMINAL INTERFACE PORTS	BLACK DATA SWITCH
SHUTTLE PAYLOAD INTERROGATOR 1.024 MHZ SUBCARRIER DATA	TV/ANALOG AND TV ONLY INTER-TERMINAL INTERFACE PORTS	BLACK DATA SWITCH
SHUTTLE COMMAND ECHO DATA (32 kbps OR 72 kbps)	BLACK DATA SWITCH	COMMUNICATIONS SWITCH MULTIPLEXER INPUT PORTS
COMPOSITE LDR MULTIPLEXED SIGNAL (≤ 10 Mbps)	COMMUNICATIONS SWITCH MULTIPLEXER OUTPUT PORT	BLACK DATA SWITCH FOR ANY OF N HDR RECORDER INPUTS
COMPOSITE LDR MULTIPLEXED SIGNAL (≤ 10 Mbps)	ANY OF N HDR RECORDER PLAYBACK OUTPUTS FROM BLACK DATA SWITCH	LOR PLAYBACK DEMULTIPLEXER INPUT PORT
DEMULTIPLEXED DATA	LOR PLAYBACK DEMUX OUTPUT	BLACK DATA SWITCH
DEMULTIPLEXED DATA	BLACK DATA SWITCH	COMMUNICATIONS SWITCH MULTIPLEXER INPUT PORTS
CUSTOMER RETURN DATA (≤ 7 Mbps), TDRS COMMAND DATA	BLACK DATA SWITCH	COMMUNICATIONS SWITCH MULTIPLEXER INPUT PORTS
SHUTTLE RETURN TV/ANALOG DATA	TV/ANALOG AND TV ONLY INTER-TERMINAL INTERFACE PORTS	GSFC/JSC CC TV/ANALOG AND TV ONLY INTERFACES, BLACK DATA SWITCH

Table 8-4. Connectivity Requirements for Communications Switch (Cont'd)

SIGNAL	FROM	TO
COMPOSITE SIGNAL (≤ 10 Mbps) FROM GSFC	GSFC CC INTERFACE AND INTER-TERMINAL INTERFACE	GSFC DEMULTIPLEXER INPUT
SHUTTLE ANALOG VOICE	SHUTTLE RETURN DATA PROCESSOR-1, 2	GSFC/JSC CC ANALOG VOICE INTERFACE, ANALOG VOICE INTER-TERMINAL INTERFACE
SHUTTLE ANALOG VOICE	ANALOG VOICE INTER-TERMINAL INTERFACE PORTS	SHUTTLE RETURN DATA PROCESSOR-1, 2; GSFC/JSC CC ANALOG VOICE INTERFACE
COMPOSITE SIGNAL (≤ 10 Mbps) FROM JSC	JSC CC INTERFACE AND INTER-TERMINAL INTERFACE	JSC DEMULTIPLEXER INPUT
COMPOSITE SIGNAL (≤ 10 Mbps) FROM GSFC	GSFC CC INTERFACE	INTER-TERMINAL INTERFACE
COMPOSITE SIGNAL (≤ 10 Mbps) FROM JSC	JSC CC INTERFACE	INTER-TERMINAL INTERFACE
COMPOSITE SIGNAL (≤ 10 Mbps) TO GSFC/JSC	COMMUNICATIONS SWITCH MULTIPLEXER OUTPUT	CROSS-STRAPPING MULTIPLEXERS, INTER-TERMINAL INTERFACE
COMPOSITE SIGNAL (≤ 10 Mbps) TO GSFC/JSC	INTER-TERMINAL INTERFACE	CROSS-STRAPPING MULTIPLEXERS
MULTIPLEXED HIGH RATE CUSTOMER RETURN DATA (50 Mbps) TO GSFC/JSC	HIGH RATE MULTIPLEXER OUTPUT	50 Mbps INTER-TERMINAL INTERFACE PORT AND CC INTERFACE
SHUTTLE RETURN TV/ANALOG AND TV ONLY DATA	SHUTTLE RETURN DATA PROCESSORS-1, 2	GSFC/JSC CC TV/ANALOG AND TV ONLY INTERFACE PORTS. INTER-TERMINAL TV/ANALOG AND TV ONLY INTERFACE PORTS
NOTE IN ANY ROW, ALL FROM/TO CONNECTIVITIES SHALL BE AVAILABLE.		

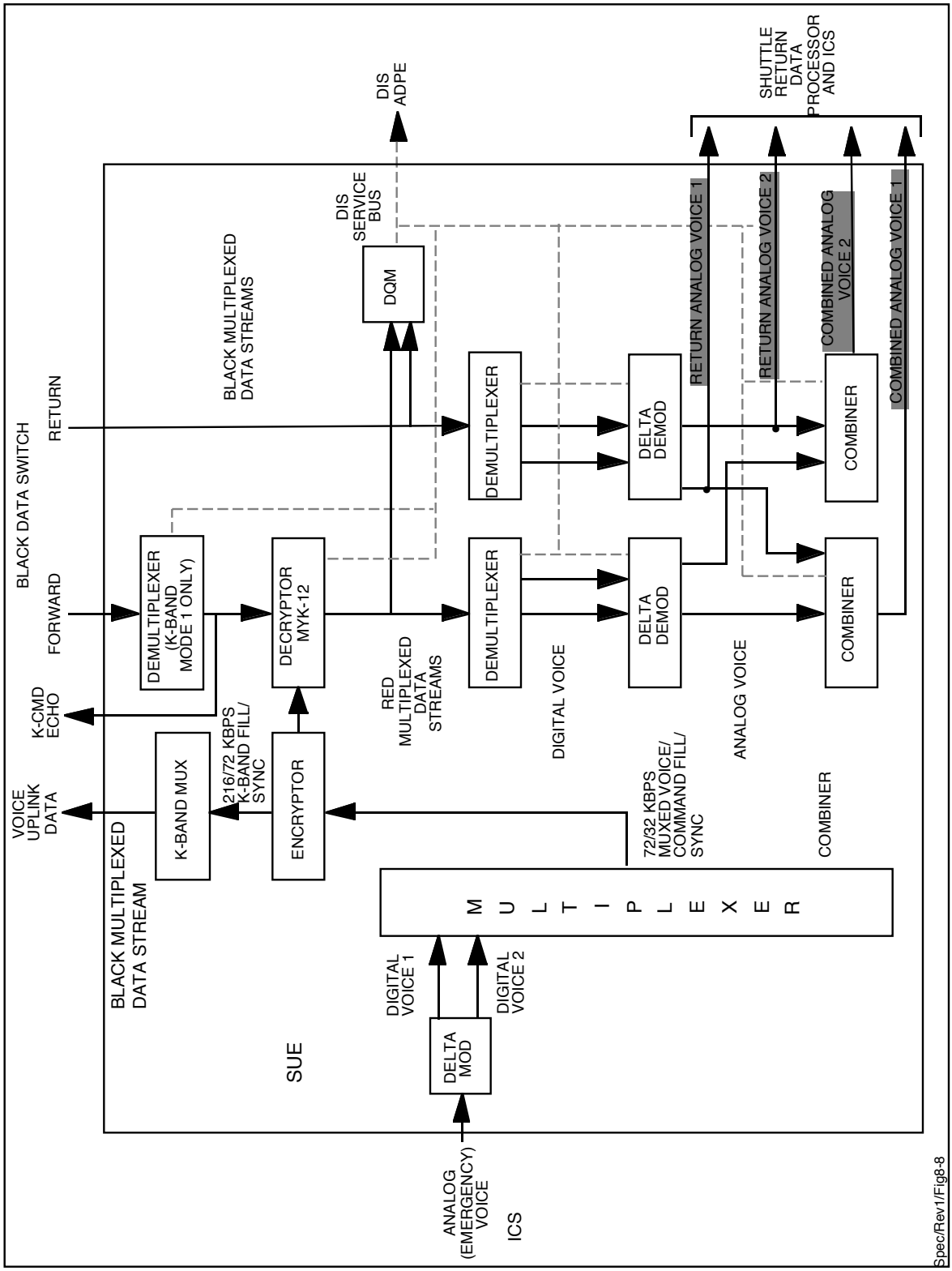

Figure 8-8. SUE Reference Functional Configuration

the 72 kbps command/voice component of the K-band forward data signal for one Shuttle mission. Reconfiguration (OPM-03) and failover, subsequent to TOCC operator selection of SUE inputs, shall be based on the current operator selected configuration. A manual switching capability shall be provided for Shuttle audio failover switching to allow the voice output signals from either SUE to be connected to the appropriate GSFC/JSC CC input ports.

Each SUE shall output the following five signals: Return Voice 1, Return Voice 2, Conferenced (forward/return) Voice 1, Conferenced (forward/return) Voice 2, and K-CMD Echo.

The K-CMD Echo from the SUE and the S-CMD Echo from the JSC Demux shall be sent to the JSC via the Communications Switch Multiplexer input ports.

The Communications Switch Multiplexer port addresses for the S-CMD and K-CMD Echo to JSC shall be different for Danzante and Cacique. Simultaneous S-CMD or K-CMD Echo shall not be required for a single Ground Terminal.

8.2.8.1 Decryption

Encrypted Shuttle forward data signals shall be routed by the Black Data Switch to the MYK-12 decryptor. These data signals shall be converted from black to red by decryptors, and the resultant red signals shall be provided as inputs to Data Quality Monitors (DQMs) and to demultiplexers.

8.2.8.2 Shuttle Data Quality Monitoring

The DQMs shall perform bit error measurements on the frame sync words of the multiplexed Shuttle forward and return data signals. DQM for the Shuttle return data shall be provided by the DQMs in the USS. The measurement results shall be reported to the Executive ADPE Subsystem supporting the Shuttle service.

8.2.8.3 Shuttle Voice Signal Extraction

The Shuttle forward and return data signals shall be demultiplexed and the digital voice signals extracted. The digital voice signals shall be D/A converted by delta demodulators, using the modified Abate algorithm defined in Section 4.2.1 of ICD -2-0D004.

8.2.8.4 Shuttle Emergency Voice

The SUE shall be capable of receiving a single analog voice signal from the ICS and generating digital voice to be used for forward Shuttle emergency communications. The digital voice shall be delta modulated using the modified Abate algorithm as described in paragraph 8.2.8.3. This digital voice shall then be multiplexed into a Shuttle forward digital data stream at the forward data rates described in paragraph 8.2.8.

8.2.9 Shuttle Return Data Processing

The Shuttle Return Data Processor shall provide switching capabilities to the TV/Analog channel input for individually routed signals directly to the TV only and TV/Analog outputs, bypassing all internal signal processing. The Cacique SRDP shall be capable of switching and signal processing the GRGT SRDP data.

8.2.9.1 TV/Analog Processing

Shuttle or Shuttle payload TV/Analog data occupying the 20-Hz to 4.2-MHz band is received via the KSA analog Channel from the USS. The signal parameters for Shuttle monochrome or NTSC color TV are given in ICD -2-0D004, Section 4.2.8.1.

The TV processing equipment shall provide for synchronizing the Shuttle voice from the SUE with the video signal. Each TV Processor shall provide the signal conditioning interfaces for two simultaneous video signals between the User Service Subsystem and the GSFC/JSC CC and inter-terminal interfaces. In addition, the TV processor shall provide for the capability of scrambling the combined TV signal prior to routing to the GSFC/JSC CC interface. The TV processor shall provide vertical interval data detection and system test video signals.

Each TV Processor shall be bypassed when the received signal is analog data.

Each TV processor shall include duplicate tape recording equipment for recording incoming synchronized video and associated conferenced (forward/return) voice signals. The equipment shall utilize and conform to the Electronics Industry Association (EIA), NTSC, and the Network Transmission Committee (of the Video Transmission Engineering Advisory Committee) (NTC) standards. The system shall be capable of processing, recording, and reproducing monochrome, NTSC color signals. Separate audio tracks shall be recorded for conferenced (forward/return) voice signals.

The TV processor shall provide the following functional capabilities:

8.2.9.1.1 Video and Audio Switching Functions

a. Video switching shall be provided for thirty input/output channels of standard video. The video switch shall maintain dc reference of composite and non-composite signals. Each Channel shall provide adjustable gain over a bandwidth consistent with the requirements of NTSC and EIA standards. An external RS-232C control interface shall be provided for the video switch. An operator terminal, including CRT and keyboard, shall be capable of controlling the switch.

b. Audio switching shall be provided for twenty input/output channels. Remote controls connected to output channels shall give each customer access to all input channels. All circuits shall be isolated to permit one or all outputs to be connected to a single common input without level change.

8.2.9.1.2 Signal Distribution

Distribution amplifiers shall be provided for pulse distribution and video distribution with no significant degradation to NTSC video.

Pulse signals shall be sampled and regenerated to a constant output amplitude level, with an input level dynamic range of 14 dB.

8.2.9.1.3 Test Signal Generation

The following test signals shall be generated: multiburst, linearity staircase, sine-squared pulse and bar, window, field, square wave, convergence, color bars, flat field, and composite. The signal generator shall be capable of being programmed to process or originate Vertical Interval Reference Signals (VIRS) and to insert Vertical Interval Test Signals (VITS).

8.2.9.1.4 Noise Filtering

Low-pass filters shall be provided for filtering the Shuttle return video incoming signals. The 3-dB bandwidth shall be 4.3 MHz, and frequencies above 5.3 MHz shall be attenuated at least 45 dB.

8.2.9.1.5 Synchronization Pulse Insertion

The capability shall be provided for stripping and reinserting sync pulses.

8.2.9.1.6 Level Control

Control of sync-to-video ratio shall be provided through independent level control of the sync and video.

8.2.9.1.7 Video Signal Regeneration

Processing amplifiers shall be capable of regenerating the sync, blanking, and burst components of a video signal. They shall also provide hum rejection, hard and soft clipping, video and chroma gain control, pedestal adjustment, and fade to black. Black burst function shall be available during periods of no signal or noisy signal.

8.2.9.1.8 NTSC Color Video Processing

Means shall be provided for measuring and controlling phase and amplitude errors in standard NTSC color video signals. The measurement of hue shall be in terms of the relative phase of the chrominance with respect to the color burst. Color correction shall be accomplished through frequency and phase correction of 3.58 MHz subcarrier.

8.2.9.1.9 Vertical Interval Data Detection

A Vertical Interval Data Detector (VIDD) shall be provided to recover vertical interval telemetry data and digitized, interleaved audio from the Shuttle downlink video signal.

8.2.9.1.10 Monitoring and Display

Monitoring and display equipment shall be provided for operator information and control. The following capabilities shall be provided.

a. Waveform Monitoring. Waveform monitoring shall incorporate distortion-free vertical overscan capability, selectable vertical response, d-c restoration, interval calibration square wave, and horizontal magnification to X 50.

b. Color Monitoring. Color monitoring equipment shall provide the capability to shift the picture horizontally an/or vertically to enable observation of sync, burst, blanking, vertical interval, and reference signals. The equipment shall accept either internal or external sync, and shall be capable of monitoring red green blue (RGB) signals.

8.2.9.1.11 Video Measurement and Logging

Automatic and operator-initiated video measurement capabilities shall be provided for measurements on VITS and full field signals. Measurements shall include amplitude, phase, timing, and noise parameters. Capabilities shall be provided for automatic logging, for customer-created measurement procedures, and for operator-initiated troubleshooting. A display terminal with keyboard and operating controls, and an associated hard copy unit, shall be provided for this purpose.

8.2.9.1.12 Video Recording

Video reproduction recording capability shall be provided with a 90-minute record/play time. This requirement does not preclude the use of multiple sequential recorders to provide a continuous 90-minute record/play time. This capability shall be compatible with 60 Hz monochrome and NTSC color systems. The system shall provide two full bandwidth record/playback audio channels, high speed Shuttle, variable speed play, color frames, and tape timer with one-frame accuracy.

8.2.9.2 Digital Data on Channel 3, Mode 2, Processing

Signal processing shall be provided to extract digital data which is transmitted from the Shuttle on Channel 3, Mode 2. The signal parameters are NRZ-L,M,S formatted data from 16 kbps to 4 Mbps, and Bi-ϕ-L,M,S formatted data from 16 kbps to 2 Mbps. The signal processing required is clock recovery, bit detection, and data format conversion to NRZ-L. In Mode 2, simultaneous support of digital data on channel 3, and the 1.024 MHz subcarrier on channel 2 is not required.

8.2.9.3 1.024 MHz Subcarrier Processing

Signal processing shall be provided to extract digital data from the Shuttle payload interrogator 1.024 MHz subcarrier. The signal parameters for this signal are specified in Table 8-5. This subcarrier signal will be transmitted from Shuttle either on Channel 2 of Modes 1 or 2, or on Channel 3 of Mode 2. The signal processing required is subcarrier demodulation, clock recovery, bit detection, and data format conversion to NRZ-L. In Mode 2, simultaneous support of digital data on channel 3, and the 1.024 MHz subcarrier on channel 2 is not required. Redundant BPSK test modulators shall be provided to support KSHR pre-service tests.

8.2.10 High Data Rate Multiplexing/Demultiplexing

The HDR Multiplex equipment shall be capable of multiplexing up to four individual customer data streams with individual customer data rates between 125 kbps and 48 Mbps into a composite 50 Mbps output data stream. The HDR Multiplex equipment shall comply with specifications in Appendix C to ensure compatibility with the Statistical Multiplexer Data Subsystem of the NASCOM Space Network. The HDR Demultiplex equipment shall accept the 50 Mbps output of the HDR Multiplex equipment and provide up to four demultiplexed customer data streams with individual customer data rates between 125 kbps and 48 Mbps.

Table 8-5. Shuttle Payload Interrogator 1.024 MHz Subcarrier Signal Parameters

BINARY PSK ± 90° SUBCARRIER MODULATION
SUBCARRIER, 1.024 ± 0.01% MHz SQUARE WAVE
SUBCARRIER HARMONIC DISTORTION, ≤ 1.0%
SUBCARRIER FREQUENCY STABILITY, ≤ 0.01% OVER 1 HOUR
BIT RATES; 16, 8, 4, 2, 1 kbps
BIT FORMAT; NRZ-L,M,S OR BI-ϕ-L,M,S
DATA ASYMMETRY, ≤ 2%
BIT RATE INSTABILITY, ≤ 0.01%
TRANSITION DENSITY, ≥ 64 TRANSITIONS IN 512 BITS
≤ 64 CONSECUTIVE BITS W/O TRANSITION

8.2.11 High Data Rate Recording/Playback

The HDR recording/playback system, consisting of multiple units, shall provide both data rate conversion (recording at the customer return data rate and playing back at a lower rate) and GSFC/JSC CC line outage protection. Each unit shall be capable of recording data rates ranging from 1.5 to 150 Mbps and playing back at rates from 1.5 to 150 Mbps.

The recording/playback system shall be implemented such that no loss of data occurs during recording or playback.

8.2.11.1 HDR Recording

The HDR recording system shall be capable of simultaneously recording the following continuous data signals:

a. One ≤ 10 Mbps composite low data rate (LDR) multiplexed signal output from the Communications Switch.

b. Three ≤ 150 Mbps Customer Return data signals from the Black Data Switch.

8.2.11.2 HDR Playback

The HDR playback system shall have provision for continuous DQM monitoring of data (as appropriate) as it is being played back and reporting the DQM status to the DIS ADPE Subsystem. The requirements for data quality monitoring are described in Appendix B. The playback system shall have the capability of simultaneously playing back the following data signals:

a. One ≤ 10 Mbps composite LDR multiplexed signal.

b. One ≤ 150 Mbps Customer Return data signal.

8.2.12 Data Link Monitoring

The Data Link Monitor (DLM) Subsystem shall monitor in real time both incoming and outgoing digital data signals at the GSFC/JSC CC interfaces (see Figures 8-2, 8-3, and 8-6) and the 50 Mbps output signal interface to the GSFC/JSC CC interfaces. The monitored parameters shall permit selection of the best of prime and redundant incoming data signals and selection of prime and redundant equipment for outgoing signals. Visual and audible alarms shall alert the operator of GSFC/JSC CC link degradation or failure within two seconds, where link degradation shall be interpreted as link performance with an error rate greater than an operator adjustable threshold value. Data link status messages shall be time-tagged and logged by the DIS ADPE Subsystem. Both prime and redundant data signal parameters shall be displayed locally.

8.2.13 Transmission Protocol

The DIS ADPE Subsystem shall perform all transmission protocol functions for automatic operational message exchange between each Danzante and Cacique, and NCC, as specified in 530-ICD-NCC-FDF/WSC.

8.2.14 DIS Self-Testing

The DIS shall be capable of automatic self-testing as scheduled by the DIS ADPE Subsystem. BIT and BITE shall be incorporated, and BIT/BITE data shall be provided to the DIS ADPE Subsystem.

MYK-12 Encryptors will be provided for self-testing the SUE in the encrypted mode. The KG-81 or KG-94 security equipment shall be excluded from DIS automatic self-test.

8.2.15 CTFS Monitoring

The DIS ADPE Subsystem shall receive, log, delog, and archive CTFS status data, detect changes and anomalies in the data, and provide anomaly notification to the DIS TOCC operator.

8.2.16 Data Splitter/Selector

The single incoming NCC OPS channel, after demultiplexing by the secure MUX, shall be split by a data splitter/selector into two signals for transmission to the prime and redundant DIS ADPEs. For outgoing NCC OPS, the data splitter/selector shall select the appropriate prime or redundant DIS ADPE for connection to the secure MUX.

8.2.17 GDIS

The processing of data for transportation between Cacique and GRGT shall be provided by the GDIS. The GDIS shall provide processing of secure data, CDCN LAN traffic and TDMs, and Black data, Customer forward and return data and TDRS command and telemetry. The GDIS shall provide an interface to the GRGT CC for the transportation of data between Cacique and GRGT. The GDIS reference architecture and functional flow in providing this capability is shown in Figure 8-9. Table 8-6 lists the GDIS connectivity requirements.

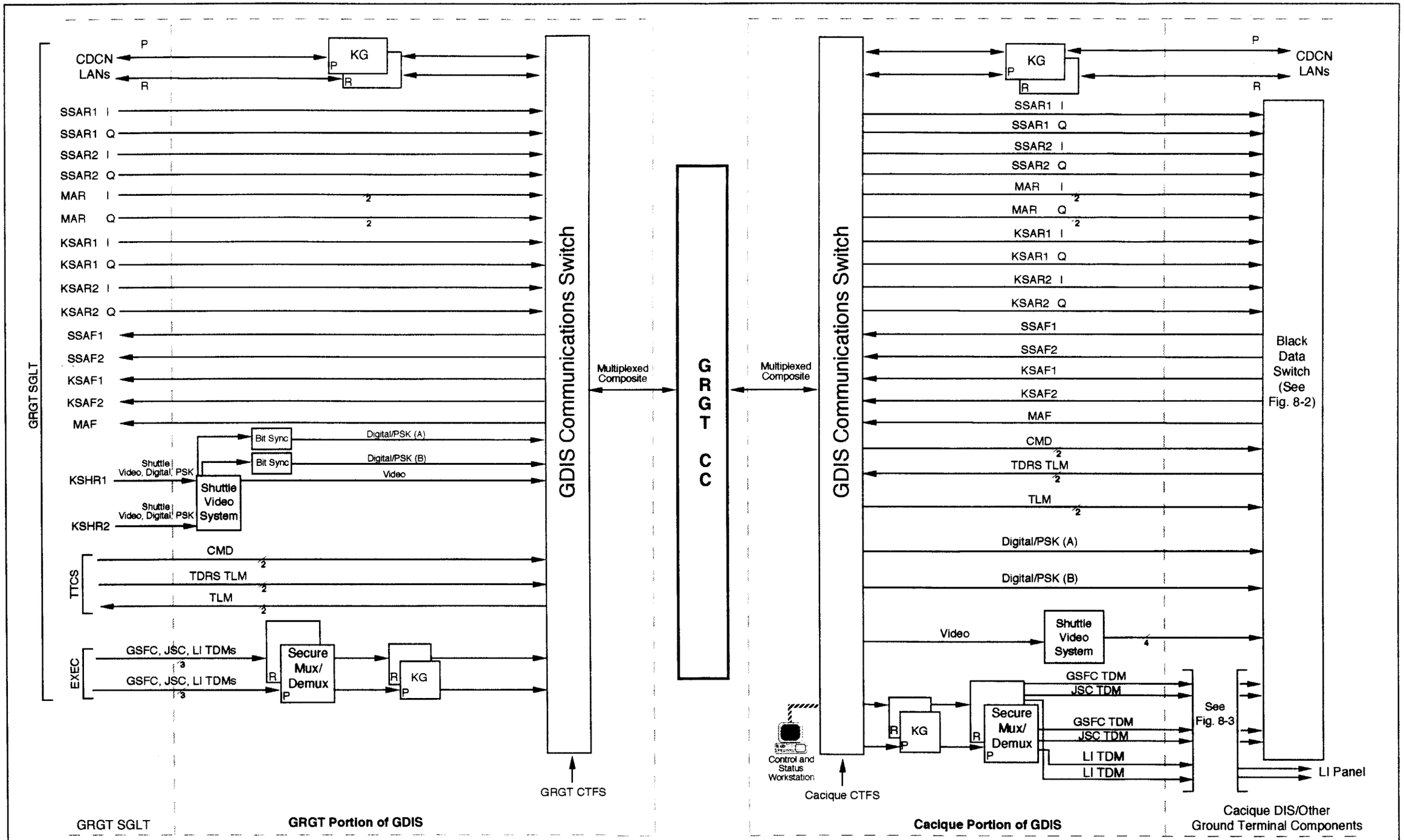

Figure 8-9: GDIS Reference Architecture and Functional Flow

Table 8-6. Connectivity Requirements for GDIS

SIGNAL	FROM	TO
Cacique/GRGT CDCN LAN Traffic	GRGT CDCN LANs P and R	KGs P and R
Cacique/GRGT CDCN LAN Traffic	KGs P and R	GRGT GDIS Communications Switch
Cacique/GRGT CDCN LAN Traffic	GRGT GDIS Communications Switch	KGs P and R
Cacique/GRGT CDCN LAN Traffic	KGs P and R	GRGT CDCN LANs P and R
GSFC, JSC, LI TDMs	GRGT SGLT Executive ADPEs P and R	Secure Mux/Demux
GSFC, JSC, LI TDMs	Secure Mux/Demux	KG Equipment
GSFC, JSC, LI TDMs	KG Equipment	GRGT GDIS Communications Switch
KSA CUSTOMER FORWARD DATA	GRGT GDIS COMMUNICATIONS SWITCH	GRGT SGLT KSAF 1 AND 2 INPUT PORTS
KSA CUSTOMER RETURN DATA	GRGT SGLT KSAR-1 AND 2 (I, Q, I&Q MULTIPLEXED)	GRGT GDIS COMMUNICATIONS SWITCH
MA CUSTOMER FORWARD DATA	GRGT GDIS COMMUNICATIONS SWITCH	GRGT SGLT MAF INPUT PORT
MA CUSTOMER RETURN DATA	GRGT SGLT MAR-1 AND MAR-2 (I AND Q)	GRGT GDIS COMMUNICATIONS SWITCH
Multiplexed User Forward Data, LAN Traffic, TDRS Telemetry	GRGT CC Interface	GRGT GDIS Communications Switch
Multiplexed User Return Data, LAN Traffic, TDMs, TDRS Command, TDRS Telemetry	GRGT GDIS Communications Switch	GRGT CC Interface
Precision Timing	GRGT CTFS	GRGT GDIS Communications Switch
Shuttle Analog Channel Digital Data, Shuttle PI 1.024 Mhz Subcarrier Data	GRGT Shuttle Video System Demodulators and Bit Synchronizers	GRGT GDIS Communications Switch

Table 8-6. Connectivity Requirements for GDIS (Continued)

SIGNAL	FROM	TO
Shuttle Return TV, Shuttle Analog Channel Digital Data, Shuttle PI 1.024 MHz Subcarrier Data	GRGT SGLT	GRGT Shuttle Video System
Shuttle Return TV	GRGT Shuttle Video System	GRGT GDIS Communications Switch
SSA CUSTOMER FORWARD DATA	GRGT GDIS COMMUNICATIONS SWITCH	GRGT SGLT SSAF 1 AND 2 INPUT PORTS
SSA CUSTOMER RETURN DATA	GRGT SGLT SSAR-1 AND 2 (I, Q, I&Q MULTIPLEXED)	GRGT GDIS COMMUNICATIONS SWITCH
TDRS Command Data	GRGT SGLT TT&C Subsystem	GRGT GDIS Communications Switch
TDRS Telemetry Data	GRGT GDIS Communications Switch	GRGT SGLT TT&C Subsystem
TDRS Telemetry Data	GRGT SGLT TT&C Subsystem	GRGT GDIS Communications Switch
Cacique/GRGT CDCN LAN Traffic	Cacique GDIS Communications Switch	KGs P and R
Cacique/GRGT CDCN LAN Traffic	KGs P and R	Cacique CDCN LANs P and R
Cacique/GRGT CDCN LAN Traffic	Cacique CDCN LANs P and R	KGs P and R
Cacique/GRGT CDCN LAN Traffic	KGs P and R	Cacique GDIS Communications Switch
GSFC and JSC TDMs	KG Equipment	Cacique DIS Black Data Switch via the Cacique DIS GSFC and JSC TBCs
GSFC, JSC and LI TDMs	Cacique GDIS Communications Switch	KG Equipment
KSA CUSTOMER FORWARD DATA	CACIQUE DIS BLACK DATA SWITCH	CACIQUE GDIS COMMUNICATIONS SWITCH
KSA CUSTOMER RETURN DATA	CACIQUE GDIS COMMUNICATIONS SWITCH	CACIQUE DIS BLACK DATA SWITCH

Table 8-6. Connectivity Requirements for GDIS (Continued)

SIGNAL	FROM	TO
LI TDMs	KG Equipment	LI Panel via the Cacique DIS LI TBC
MA CUSTOMER FORWARD DATA	CACIQUE DIS BLACK DATA SWITCH	CACIQUE GDIS COMMUNICATIONS SWITCH
MA CUSTOMER RETURN DATA	CACIQUE GDIS COMMUNICATIONS SWITCH	CACIQUE DIS BLACK DATA SWITCH
Multiplexed User Forward Data, LAN Traffic, TDRS Telemetry	Cacique GDIS Communications Switch	GRGT CC Interface
Multiplexed User Return Data, LAN Traffic, TDMs, TDRS Command, TDRS Telemetry	GRGT CC Interface	Cacique GDIS Communications Switch
Precision Timing	Cacique CTFS	Cacique/GDIS Communications Switch
Shuttle Analog Channel Digital Data, Shuttle PI 1.024 MHz Subcarrier Data	Cacique GDIS Communications Switch	Cacique DIS Black Data Switch
Shuttle Return TV	Cacique GDIS Communications Switch	Cacique GDIS Shuttle Video System
Shuttle Return TV	Cacique GDIS Shuttle Video System	Cacique DIS Black Data Switch
SSA CUSTOMER FORWARD DATA	CACIQUE DIS BLACK DATA SWITCH	CACIQUE GDIS COMMUNICATIONS SWITCH
SSA CUSTOMER RETURN DATA	CACIQUE GDIS COMMUNICATIONS SWITCH	CACIQUE DIS BLACK DATA SWITCH
TDRS Command Data	Cacique GDIS Communications Switch	Cacique DIS Black Data Switch
TDRS Telemetry Data	Cacique DIS Black Data Switch	Cacique GDIS Communications Switch
TDRS Telemetry Data	Cacique GDIS Communications Switch	Cacique DIS Black Data Switch

8.2.17.1 GDIS Equipment Setup, Control and Monitoring

The Cacique DIS ADPE Subsystem shall enable and disable the GDIS Communications Switch ports based upon SHOs and OPMs received from the NCC for the scheduling of the GRGT SGLT.

8.2.17.2 LAN Connections

The Cacique CDCN LAN shall be extended to GRGT via the GDIS to support the operations and control of the GRGT SGLT. Table 8-1 lists the LAN connectivity requirements. The CDCN LAN connection between Cacique and GRGT shall be protected as specified in Section 8.2.17.4.

8.2.17.3 GDIS Secure Data Multiplexing and Demultiplexing

The GSFC, JSC and LI formatted TDMs, from the GRGT SGLT Executive ADPE Subsystem, shall be multiplexed at the GRGT GDIS into a composite data signal for transmission to the GRGT CC. The TDM composite data signal between GRGT and Cacique shall be protected as specified in Section 8.2.17.4. The TDM composite data signal shall be demultiplexed at the Cacique GDIS for routing to the appropriate TBCs.

8.2.17.4 GDIS Encryption/Decryption

Encryption shall be provided to protect operational sensitive data prior to being transmitted via the GRGT CC. Each data stream, prime and redundant composite TDMs and prime and redundant CDCN LANs, shall be encrypted/decrypted by separate cryptographic equipment. Only front panel control of the cryptographic devices shall be available.

8.2.17.5 GDIS Communications Switching

8.2.17.5.1 General

The GRGT Communications Switch functional flow is shown in Figure 8-9. In addition to circuit switching, the GDIS Communications Switch shall perform multiplexing and demultiplexing of all data to/from Cacique and GRGT via the GRGT CC interface.

The GDIS Communications Switch shall be capable of processing serial bit-contiguous data, and digitized Shuttle TV signals. The GDIS Communications Switch shall be capable of validating circuit operations between the Cacique and GRGT portions of the GDIS Communications Switch.

8.2.17.5.2 Multiplexing

The GDIS Communications Switch shall accept data in serial bit-contiguous form and transmit a multiplexed signal to the GRGT CC. Prior to multiplexing the data, the GDIS Communications Switch shall generate error control information for detection of transmission errors.

During periods of time (intervals greater than one second) when the GDIS Communications Switch multiplexer input port does not have data ready for transmission to the receiving GDIS Communications Switch, the GDIS Communications Switch multiplexer shall have the capability to generate and transmit a circuit assurance block to the remote GDIS Communications Switch demultiplexer output port at a rate of one block per second. The circuit assurance blocks shall provide a confidence check on circuit operation.

8.2.17.5.3 Demultiplexing

The GDIS Communications Switch shall be capable of receiving multiplexed data from the GRGT CC interface and routing demultiplexed serial bit-contiguous, and digitized Shuttle TV data as shown in Figure 8-9. The GDIS Communications Switch shall first check the error code field for validity before routing the serial bit-contiguous data.

During periods of time (intervals greater than one second) when a GDIS Communications Switch demultiplexer output port is not receiving data from the transmitting GDIS Communications Switch, the GDIS Communications Switch will receive a circuit assurance block transmitted from the remote GDIS Communications Switch, and shall route the blocks to the output port for processing. Circuit assurance blocks shall be inhibited from being transmitted from the GDIS Communications Switch demultiplexer output ports.

8.2.17.5.4 GDIS Communications Switch Control

The Cacique DIS ADPE shall provide the capability to enable/disable the GDIS Communications Switch input and output ports. Configuration/reconfiguration shall be in response to SHOs and OPMs received from the NCC.

A control and status workstation shall be provided at Cacique to configure and maintain status on the Cacique and GRGT segments of the GDIS Communications Switch. The GDIS Communications Switch shall provide operational status information and alarms to the control and status workstation.

8.2.17.5.5 GRGT CC Interface

The composite data and clock signals for the GDIS Communications Switch interface with the GRGT CC shall be as specified in 530-ICD-GRGT-GCF.

8.2.17.6 GDIS SRDP

The GDIS SRDP shall provide switching and signal processing of Shuttle TV, digital data on Channel 3, Mode 2, and 1.024 MHz Subcarrier. The GDIS SRDP shall select and route the signal from GRGT SGLT USS to the GRGT GDIS Communications Switch.

8.2.17.6.1 TV Processing

The GDIS SRDP at GRGT shall digitize and compress the Shuttle TV data occupying the 20 Hz to 4.2 MHz band received via the KSA analog channel from the GRGT SGLT USS prior to routing the signal to the GDIS Communications Switch. The GDIS SRDP at Cacique shall convert the compressed, digitized Shuttle TV data received from GRGT to an analog signal prior to routing the signal to the Cacique DIS Black Data Switch.

8.2.17.6.2 Digital Data Processing

The GDIS SRDP shall provide signal processing of the digital data on Channel 3, Mode 2 and the 1.024 MHz Subcarrier prior to routing the signal to the GDIS Communications Switch. The signal processing required is clock recovery.

8.3 Performance Requirements

8.3.1 Operational Message Response Time

Response times for acknowledge/retransmit protocols are defined in 530-ICD-NCC-FDF/WSC and is applicable to the operation of all ground terminals. Response times for Schedule Orders (SHOs) and OPMs shall be in accordance with the requirements of Section 5.6.3 and 530-ICD-NCC-FDF/WSC. Acceptance/rejection of SHOs and OPMs shall be coordinated with the relevant SGLT prior to informing the NCC of the accept/reject status. The response time for a DIS equipment reconfiguration in response to a Customer Reconfiguration OPM shall be less than 35 seconds from receipt and acceptance of an OPM. Acceptance/rejection of the reconfiguration OPM must be coordinated with the relevant SGLT prior to equipment reconfiguration.

The DIS ADPE Subsystem shall acknowledge TOCC operator inputs from an operator position within 0.5 seconds.

8.3.2 Throughput

The DIS implementation shall be in modular form to facilitate subsequent growth in the total throughput levels through the addition of more modules of identical design.

8.3.2.1 Low Rate (≤ 7 Mbps) Black Data Traffic Throughput

The DIS shall be capable of simultaneously transporting two ≤ 10 Mbps multiplexed low rate forward black data streams -- one from GSFC, and one from JSC. The DIS shall be capable of transporting one ≤ 10 Mbps multiplexed low rate return black data stream to the GSFC/JSC CC interface for transmission to GSFC/JSC simultaneously. This data stream shall contain multiplexed data from both Ground Terminals. The DIS at each Danzante and Cacique shall transport two (prime and redundant) multiplexed low rate return data streams to the inter-terminal interface.

8.3.2.2 High Rate (≤ 48 Mbps) Customer Data Traffic Throughput

The DIS shall transport multiplexed high rate return nonsecure data traffic from the HDR Multiplexer via a 50 Mbps circuit to the GSFC/JSC CC interfaces. The DIS shall control inputs to the HDR Multiplexer via the Black Data Switch from the USS, HDR Recorders, or the HDR Demultiplexer based on schedule data from the NCC. The DIS shall provide input to the HDR Demultiplexer via the Black Data Switch from the 50 Mbps circuit from the inter-terminal interface. Up to four customer return data signals, from any source, with an aggregate rate of ≤ 48 Mbps shall be multiplexed or demultiplexed.

8.3.2.3 Local Interface Data Traffic Throughput

The DIS shall be capable of transporting up to four data signals (100 bps to 10 Mbps) and four data signals (10 Mbps to 300 Mbps) from the USSs to the local interface, four data signals (100 bps to 10 Mbps) from the local interface to the USSs, and TDMs from the SGLTs to the local interface.

8.3.2.4 TV/Analog Return Data Traffic Throughput

The DIS shall be capable of transporting two simplex TV/Analog data signals from the USS to the GSFC/JSC CC interface and to the inter-terminal interface.

8.3.2.5 GDIS Throughput

The GDIS Communications Switch shall be capable of transporting a total composite data rate of up to 70 Mbps. Individual channel data rates shall be between 100 bps and 50 Mbps.

8.3.3 Capacity

8.3.3.1 Working Data Storage Requirements

Sufficient capacity shall be included in working storage of the DIS ADPE Subsystem to store operational messages from time of message transmission or receipt until 24 hours after completion of the related services. Data storage for scheduling support shall accommodate 100 Support Identifier (SUPIDEN) characteristic files.

Sufficient capacity shall be provided for schedule data to accommodate a forecast schedule period of 48 hours with 600 SHOs.

8.3.3.2 High Data Rate Storage Requirements

Each of the HDR recording units shall accommodate on-line records capable of storing a minimum of 80 Gigabits of information per record.

8.3.3.3 Logging Capacity

Recording units used for logging operations data, as specified in Section 8.5.8, shall accommodate logging of specified data for 24 hours.

8.3.4 Data Quality

The average bit error probability on a digital connection through the DIS, including the GDIS when appropriate, between the input from the SGLT and output to the GSFC/JSC CC/inter-terminal interface and vice versa, shall be less than one error in 10^{12} bits over any 24-hour period at any data rate. The data transmitted between Cacique and GRGT GDIS Communications Switches is subject to the GRGT CC interface BER requirement as specified in 530-ICD-GRGT-GCF. The peak-to-peak signal/rms noise ratio on the TV only and TV/Analog connections through the DIS between the input from the SGLT and the output to the GSFC/JSC CC and inter-terminal interfaces shall be 55 dB or greater.

8.3.5 Shuttle Return Data Processing

8.3.5.1 Digital Data on Channel 3, Mode 2, Processing

DIS processing of digital Shuttle return date transmitted on Channel 3, Mode 2, shall be as specified below.

8.3.5.1.1 Signal Parameters

The Channel 3, Mode 2 digital data processing equipment shall be capable of supporting a return signal formatted as NRZ-L,M,S with data rates from 16 kbps to 4 Mbps and as Biphase-L,M,S with data rates from 16 kbps to 2 Mbps.

8.3.5.1.2 Input Signal Characteristics

The signal characteristics of the DIS Channel 3, Mode 2 digital input signal shall be consistent with USS KSAR service chain output signal characteristics.

8.3.5.1.3 Ambiguity Resolution

The Channel 3, Mode 2 digital data processing equipment shall resolve data delay ambiguity as specified in Section 5.3.2.3.2.5.

8.3.5.1.4 Probability of Error (P_E)

The following probability of error requirements shall apply:

a. For the range of error probabilities specified below, the following P_E performance shall be achieved:

   $C/N_o = E_b/N_o + 10 \log R_b + L(P_E, R_b)$;

   where:
   - $10^{-7} \leq P_E \leq 10^{-5}$
   - R_b is the bit rate of the data channel
   - $L(P_E, R_b)$ is the allowable implementation loss (Item e below)
   - E_b/N_o is the theoretically required value for P_E in an AWGN channel

b. The total C/N_o is referenced at the DIS equipment input and is defined for Channel 3, Mode 2, in accordance with the formulation in Item a.

c. The specified performance shall include the degradations for all components in the DIS Channel 3, Mode 2, digital data processing equipment.

d. The specified performance shall be achieved under the conditions specified below:

   1. After signal acquisition has been completed and signal tracking has been achieved.
   2. For all Channel 3, Mode 2, digital data signal parameters and input configurations specified in Sections 8.3.5.1.2 and 8.3.5.1.3, respectively.

e. Allowable implementation losses for uncoded performance shall be as follows:

1. E_b/N_o = 9.6 dB, $P_E = 10^{-5}$: 2.3 dB.

2. E_b/N_o = 10.6 dB, $P_E = 10^{-6}$: 2.6 dB.

3. E_b/N_o = 11.5 dB, $P_E = 10^{-7}$: 3.0 dB.

For NRZ-M and NRZ-S data formats, an additional implementation loss of 0.3 dB shall be allowed.

f. The performance of the DIS Shuttle return Channel 3, Mode 2, digital data processing equipment shall meet or exceed the Probability of Error (P_E) specified above over the range of carrier to noise density ratios (C/N_o) specified, from the value required for a probability of error of 10^{-5} to a value 12 dB greater.

8.3.5.1.5 Acquisition Performance

Acquisition performance of Channel 3, Mode 2, digital data by the DIS Shuttle return processing equipment shall meet the following symbol synchronization performance requirements. Synchronization time shall be from the time demodulated signal energy is present at the symbol synchronization processor input to the time symbol synchronization is achieved. For the minimum symbol transition density and for the minimum specified C/N_o values required for 10^{-5} P_E performance, the time (in seconds) to achieve symbol synchronization shall not exceed the values specified below:

a. 300/(data rate) for Biphase signal format, with 90% probability.

b. 3000/(data rate) for NRZ signal format, with 90% probability.

8.3.5.1.6 Bit Slippage

The mean-time-to-bit-slippage caused by a cycle slip in the clock recovery loop shall be either no less than 90 minutes or no less than 10^{10} clock cycles, whichever is greater for the C/N_o required for 10^{-5} P_E performance.

8.3.5.1.7 False Acquisition

During signal acquisition and signal tracking, Channel 3, Mode 2, digital data processing shall be protected against false acquisition.

8.3.5.1.8 Loss of Clock Synchronization

Clock synchronization shall be maintained for 3 dB less C/N_o than required for 10^{-5} P_E performance.

8.3.5.1.9 Reacquisition

a. In case of loss of lock condition, the DIS Shuttle return Channel 3, Mode 2, digital data processing equipment, in conjunction with the USS, DIS, and TT&C ADPE Subsystems as necessary, shall automatically initiate reacquisition using pre-drop-lock data to aid in the reacquisition.

b. If synchronization is lost and the customer signal is present, DIS Shuttle return data processing shall not prevent the continuance of USS autotracking during digital data resynchronization.

c. If reacquisition fails, the Shuttle Return Processor shall automatically revert to the initial acquisition process and provide notification to the SGLT, the TOCC, and the Local MMI.

8.3.5.1.10 Performance Measuring and Monitoring Support

a. Status Measuring and Monitoring. During service, the DIS Shuttle Return Channel 3, Mode 2, digital data processing equipment shall provide equipment and service performance status data to the DIS ADPE Subsystem every second. This data shall include the following:

   1. Service Performance.

      (a) Symbol Lock.

      (b) C/N_o estimate.

      (c) E_b/N_o estimate.

   2. Equipment Status.

      (a) Power supply status.

      (b) AGC Status.

   3. Data Quality Monitoring.

      (a) Continuously monitor the output data (when applicable).

      (b) Report frame sync status to the DIS ADPE Subsystem every second (when applicable).

b. Front Panel Capabilities. To support MTG requirements, all equipment, down to the LRU level, shall incorporate front panel controls, status indicators, and test and monitoring points that include:

   1. Visual on/off status indication.

   2. Visual prime-redundant status indication.

   3. Access to input/output baseband signals and selected voltage levels.

   4. All status provided to the DIS ADPE Subsystem.

5. On/off controls.

6. Test mode selects.

c. BIT/BITE Monitoring. Provide BIT/BITE monitoring data to the DIS ADPE Subsystem.

8.3.5.1.11 KSHR Channel 3, Mode 2, Digital Data Processing Requirements

In conjunction with the USS and Antenna Subsystems, DIS processing of digital Shuttle return data transmitted on Channel 3, Mode 2, shall provide P_E performance $\leq 10^{-5}$ as long as the SGLT input signal characteristics are consistent with Sections 5.3.2.3.2.1 through 5.3.2.3.2.3.

8.3.5.2 1.024 MHz Subcarrier Processing

DIS processing of Shuttle return data transmitted via 1.024 MHz subcarrier on any of Channel 2, Modes 1 and 2, and Channel 3, Mode 2, shall be as specified below:

8.3.5.2.1 Signal Parameters

The 1.024 MHz subcarrier processing equipment shall be capable of supporting a return signal with parameters as specified in Table 8-5.

8.3.5.2.2 Input Signal Characteristics

The signal characteristics of the DIS 1.024 MHz input signal shall be consistent with USS KSAR service chain output signal characteristics.

8.3.5.2.3 Input Configurations

The 1.024 MHz subcarrier processing equipment shall be capable of processing input signals derived from USS processing of Channel 2, Modes 1 and 2, Channel 3, Mode 2 as described by Table 8-5.

8.3.5.2.4 Ambiguity Resolution

The 1.024 MHz subcarrier processing equipment shall resolve data phase and data delay ambiguity as specified in Section 5.3.2.3.2.5.

8.3.5.2.5 Probability of Error (P_E)

The following probability of error requirements shall apply:

a. For the range of error probabilities specified below, the following P_E performance shall be achieved:

$C/N_o = E_b/N_o + 10 \log R_b + L(P_E, R_b)$;

where:
- $10^{-7} \leq P_E \leq 10^{-5}$
- R_b is the bit rate of the data channel
- $L(P_E, R_b)$ is the allowable implementation loss (Item e below)
- E_b/N_o is the theoretically required value for P_E in an AWGN channel

b. The total C/N_o is referenced at the DIS equipment input and is defined for Channels 2, Modes 1 and 2, and Channel 3, Mode 2, in accordance with the formulation in Item a.

c. The specified performance shall include the degradations for all components in the DIS 1.024 MHz subcarrier processing equipment.

d. The specified performance shall be achieved under the conditions specified below:

1. After signal acquisition has been completed and signal tracking has been achieved.

2. For all 1.024 MHz subcarrier signal parameters and input configurations specified in Sections 8.3.5.2.2 and 8.3.5.2.3, respectively.

e. Allowable implementation losses for uncoded performance shall be as follows:

1. $E_b/N_o = 9.6$ dB, $P_E = 10^{-5}$: 2.3 dB.

2. $E_b/N_o = 10.6$ dB, $P_E = 10^{-6}$: 2.6 dB.

3. $E_b/N_o = 11.5$ dB, $P_E = 10^{-7}$: 3.0 dB.

For NRZ-M and NRZ-S data formats, an additional implementation loss of 0.3 dB shall be allowed.

f. The performance of the DIS 1.024 MHz subcarrier processing equipment shall meet or exceed the P_E specified above over the range of carrier to noise density ratios (C/N_o) specified, from the value required for a probability of error of 10^{-5} to a value 12 dB greater.

8.3.5.2.6 Acquisition Performance

Acquisition performance of the 1.024 MHz signal by the DIS processing equipment shall meet the following performance requirements.

a. 1.024 MHz Signal Acquisition. Acquisition time shall be measured from the instant at which signal energy is present at the input to the DIS equipment. The following acquisition performance requirements shall apply:

1. Acquisition time shall not exceed a value of 1 second for a C/N_o value of 55 dB-Hz.

2. The specified C/N_o is referenced at the input to the DIS 1.024 MHz subcarrier processing equipment.

3. The probability of acquisition (P_{acq}) for the time specified above shall be ≥ 0.9.

b. Symbol Synchronization. Synchronization time shall be from the time demodulated signal energy is present at the symbol synchronization processor input to the time symbol synchronization is achieved. For the minimum symbol transition density and for the minimum specified C/N_o values required for 10^{-5} P_E performance, the time (in seconds) to achieve symbol synchronization shall not exceed the values specified below:

1. 300/(data rate) for Biphase signal format, with 90% probability.

2. 3000/(data rate) for NRZ signal format, with 90% probability.

8.3.5.2.7 Bit Slippage

The mean-time-to-bit-slippage caused by a cycle slip in the clock recovery loop shall be no less than 10^{10} clock cycles for the C/N_o required for 10^{-5} P_E performance.

8.3.5.2.8 Mean Time-to-Cycle Slip

The mean time-to-cycle slip in tracking the 1.024 MHz signal shall be greater than or equal or 90 minutes for 3 dB less C/N_o than required for 10^{-5} P_E performance.

8.3.5.2.9 False Acquisition

During signal acquisition and signal tracking, 1.024 MHz subcarrier processing shall be protected against false acquisition.

8.3.5.2.10 Loss of Clock Synchronization

Clock synchronization shall be maintained for 3 dB less C/N_o than required for 10^{-5} P_E performance.

8.3.5.2.11 Reacquisition

a. In case of loss of lock condition, the DIS 1.024 MHz subcarrier processing equipment, in conjunction with the USS, DIS, and TT&C ADPE Subsystems as necessary, shall automatically initiate reacquisition using pre-drop-lock data to aid in the reacquisition.

b. If signal tracking is lost and the customer signal is present, DIS processing shall not prevent the continuance of USS autotracking during 1.024 MHz signal reacquisition.

c. Reacquisition time shall be at least two times faster than that for initial acquisition.

d. If reacquisition fails, the Shuttle Return Processor shall automatically revert to the initial acquisition process and provide notification to the SGLT, the TOCC, and the Local MMI.

8.3.5.2.12 Performance Measuring and Monitoring Support

a. Status Measuring and Monitoring. During service, the DIS 1.024 MHz subcarrier return data processing equipment shall provide equipment and service performance status data to the DIS ADPE Subsystem every second. This data shall include the following:

1. Service Performance.

   (a) 1.024 MHz Signal Lock.

   (b) Symbol Lock.

   (c) C/N_o estimate.

   (d) E_b/N_o estimate.

2. Equipment Status.

   (a) Power supply status.

   (b) AGC Status.

3. Data Quality Monitoring.

   (a) Continuously monitor the output data (when applicable).

   (b) Report frame sync status to the DIS ADPE Subsystem every second (when applicable).

b. Front Panel Capabilities. To support MTG requirements, all equipment, down to the LRU level, shall incorporate front panel controls, status indicators, and test and monitoring points that include:

   1. Visual on/off status indication.

   2. Visual prime-redundant status indication.

   3. Access to input/output baseband signals and selected voltage levels.

   4. All status provided to the DIS ADPE Subsystem.

   5. On/off controls.

   6. Test mode selects.

c. BIT/BITE Monitoring. Provide BIT/BITE monitoring data to the DIS ADPE Subsystem.

8.3.5.2.13 KSHR 1.024 MHz Subcarrier Processing Requirements

In conjunction with the USS and Antenna Subsystems, DIS processing of Shuttle return data transmitted via 1.024 MHz subcarrier on any of Channel 2, Modes 1 and 2, and Channel 3, Mode 2, shall provide P_E performance $\leq 10^{-5}$ as long as the SGLT input signal characteristics are consistent with Sections 5.3.2.3.2.1 through 5.3.2.3.2.3.

8.3.6 Secure Multiplexer/Demultiplexer Equipment

8.3.6.1 Performance Measuring and Monitoring Support

a. Status Measuring and Monitoring. The secure multiplexer/demultiplexer equipment shall provide equipment and service performance status data to the DIS ADPE Subsystem every second.

b. Front Panel Capabilities. The secure multiplexer/demultiplexer equipment shall incorporate front panel controls, status indicators, and test and monitoring points to support MTG requirements.

8.3.6.2 Availability

a. No single failure shall cause outage of primary and redundant secure multiplexer/demultiplexer equipment/strings.

b. The repair or maintenance of a failed secure multiplexer/demultiplexer LRU shall not inhibit the operation of the redundant equipment/string.

8.4 Interfaces

This section specifies the interfaces between the DIS (including the GDIS) and other system/subsystems as well as the external interfaces between the DIS (including the GDIS) and the Danzante/Cacique inter-terminal interface, the GSFC/JSC and GRGT CCs and the local interface. DIS interfaces are shown in Figure 8-2 and GDIS interfaces are shown in Figure 8-9.

8.4.1 Red Voice/Data Interfaces

8.4.1.1 ADPE Interfaces

The DIS ADPE Subsystem shall include interfaces with the Executive ADPE Subsystem of each SGLT and with the S-band TT&C ADPE Subsystem via the LAN. The Cacique DIS ADPE Subsystem shall interface with the GRGT SGLT Executive ADPE Subsystem via the Cacique GRGT CDCN LAN.

8.4.1.2 ICS Interfaces

The DIS shall include sixteen red voice interfaces and four facsimile interfaces to the ICS at each Danzante and Cacique. The voice interfaces shall consist of four prime and four redundant interfaces with GSFC, and four prime and four redundant interfaces with the other ground terminal. The fascimile interfaces shall consist of a prime and redundant interface with GSFC and a prime and redundant interface with the other ground terminal. The ICS interfaces shall be implemented at the DIS secure Mux/Demux equipment.

8.4.1.3 TDM Interfaces

Each DIS TBC shall include six interfaces (simplex input ports) for TDMs. These six interfaces shall be outputs from each SGLTs primary and redundant Executive ADPEs. For the Cacique

DIS TBCs, two of the six interfaces shall be outputs from the GRGT SGLT primary and redundant Executive ADPEs. In addition, the DIS GSFC TBC shall receive two interfaces from the outputs of the S-band TT&C primary and redundant ADPEs.

8.4.2 Black Data Interfaces

8.4.2.1 Customer Data Interfaces

Customer data interfaces shall be provided for the USSs of each SGLT, including the GRGT SGLT. Each customer data digital interface shall comprise separate data and clock ports in parallel.

8.4.2.2 TDRS Telemetry and Command Interfaces

The DIS Black Data Switch shall provide interfaces for each SGLT Ku-TT&C Subsystems (prime and redundant) and one S-band TT&C Subsystem (prime and redundant). The Cacique DIS Black Data Switch shall provide the interface for the GRGT SGLT Ku TT&C Subsystems (prime and redundant). Each interface shall contain one duplex port for TDRS commands to GSTDN and telemetry from GSTDN and one simplex port for TDRS telemetry to GSFC.

8.4.2.3 SMTF Black Interfaces (Danzante Only)

In the Danzante Ground Terminal only, the Black Data Switch shall provide two interfaces for Black OPS. Each interface shall contain one duplex port (between the SMTF and the NCC).

8.4.3 External Interfaces

External Interfaces shall comply with STDN No. 220.30, Interface Control Document (ICD) between the Second TDRSS Ground Terminal (STGT) and Ground Communications Facilities and with 530-ICD-GRGT-GCF. The following external interfaces shall be provided:

8.4.3.1 Common Carrier Interfaces

The GSFC/JSC and GRGT CC interfaces shall be as listed in Table 8-7.

a. GSFC/JSC CC Interfaces. Operational and low rate customer traffic shall be transported between three CC interfaces: Danzante/Cacique, GSFC and JSC.

   1. Forward Interfaces. Two forward (≤ 10 Mbps) interfaces shall provide for transporting composite forward data from GSFC and JSC independently to the DIS Communications Switch for forward data selection and demultiplexing.

   2. Return Interfaces.

      a. One return (≤ 10 Mbps) interface for both JSC and GSFC shall transport composite return data from the DIS Communications Switch to GSFC and JSC.

      b. One return interface shall be provided for transporting high rate return (≤ 48 Mbps) data to JSC and GSFC simultaneously.

      c. One return interface shall be provided for transporting either TV or analog data to JSC and GSFC simultaneously.

Table 8-7. GSFC/JSC/GRGT Common Carrier (CC) Interfaces

SIGNAL	NUMBER OF PORTS	DIRECTION
MULTIPLEXED OPERATIONS VOICE/DATA, CUSTOMER FORWARD DATA, AND TDRS TELEMETRY DATA FROM GSFC (≤ 10 Mbps)	1	FROM GSFC/JSC CC
MULTIPLEXED CUSTOMER FORWARD DATA FROM JSC (≤ 10 Mbps)	1	FROM GSFC/JSC CC
MULTIPLEXED OPERATIONS VOICE/DATA, CUSTOMER RETURN DATA, AND TDRS COMMAND DATA TO GSFC/JSC	1	TO GSFC/JSC CC
SHUTTLE RETURN TV/ANALOG DATA	1	TO GSFC/JSC CC
MULTIPLEXED HDR CUSTOMER RETURN DATA (50 Mbps)	1	TO GSFC/JSC CC
SHUTTLE RETURN TV ONLY	1	TO GSFC/JSC CC
SHUTTLE ANALOG VOICE	2	TO GSFC/JSC CC
MULTIPLEXED CUSTOMER FORWARD DATA, TDRS TELEMETRY DATA, AND ENCRYPTED CDCN LAN TRAFFIC	1	FROM CACIQUE GDIS TO GRGT GDIS VIA THE GRGT CC
MULTIPLEXED CUSTOMER RETURN DATA, TDRS COMMAND AND TELEMETRY DATA, MULTIPLEXED/ENCRYPTED TDMs, AND ENCRYPTED CDCN LAN TRAFFIC	1	FROM GRGT GDIS TO CACIQUE GDIS VIA THE GRGT CC

d. One additional return interface shall be provided for TV only service.

e. Two return interfaces shall be provided for transporting two simultaneous Shuttle analog voice signals to both JSC and GSFC.

b. GRGT CC Interfaces.

1. Forward Interface. One forward interface shall be provided for transporting composite forward data from Cacique to GRGT via the GDIS Communications Switch for demultiplexing and routing at GRGT.

2. Return Interface. One return interface shall be provided for transporting composite return data from GRGT to Cacique via the GDIS Communications Switch for demultiplexing and routing at Cacique.

8.4.3.2 Inter-terminal Interfaces

The inter-terminal interfaces between Danzante and Cacique only are listed in Table 8-8. The inter-terminal interface will have the capability to handle data from 100 bps to 300 Mbps, Shuttle TV or analog data, and Shuttle analog voice signals. For data rates less than 10 Mbps, these interfaces shall be RS-422.

Table 8-8. Inter-Terminal Interfaces

SIGNAL	NUMBER OF PORTS	DIRECTION
BULK ENCRYPTED P&R OPERATIONS VOICE/DATA FROM THE OTHER GROUND TERMINAL (≤ 2.048 Mbps)	2	FROM THE OTHER GROUND TERMINAL
BULK ENCRYPTED P&R OPERATIONS VOICE/DATA TO THE OTHER GROUND TERMINAL (≤ 2.048 Mbps)	2	TO THE OTHER GROUND TERMINAL
SHUTTLE TV OR ANALOG DATA	2	TO THE OTHER GROUND TERMINAL
SHUTTLE TV OR ANALOG DATA	2	FROM THE OTHER GROUND TERMINAL
MULTIPLEXED BULK ENCRYPTED OPERATIONS DATA, TDMs, CUSTOMER RETURN DATA AND TDRS COMMAND DATA (≤ 10 Mbps)	2	TO THE OTHER GROUND TERMINAL
MULTIPLEXED BULK ENCRYPTED OPERATIONS DATA, TDMs, CUSTOMER RETURN DATA AND TDRS COMMAND DATA (≤ 10 Mbps)	2	FROM THE OTHER GROUND TERMINAL
MULTIPLEXED LDRGSFC COMPOSITE (≤ 10 Mbps)	1	FROM THE OTHER GROUND TERMINAL
MULTIPLEXED LDR GSFC COMPOSITE (≤ 10 Mbps)	1	TO THE OTHER GROUND TERMINAL
MULTIPLEXED LDR JSC COMPOSITE (≤ 10 Mbps)	1	TO THE OTHER GROUND TERMINAL
MULTIPLEXED LDR JSC COMPOSITE (≤ 10 Mbps)	1	FROM THE OTHER GROUND TERMINAL
HIGH RATE CUSTOMER RETURN DATA (≤ 300 Mbps)	5	FROM THE OTHER GROUND TERMINAL
HIGH RATE CUSTOMER RETURN DATA (≤ 300 Mbps)	7	TO THE OTHER GROUND TERMINAL

Table 8-8. Inter-Terminal Interfaces (Continued)

SIGNAL	NUMBER OF PORTS	DIRECTION
SHUTTLE TV ONLY	2	FROM THE OTHER GROUND TERMINAL
SHUTTLE TV ONLY	2	TO THE OTHER GROUND TERMINAL
MULTIPLEXED HIGH RATE RETURN DATA (50 Mbps)	2	FROM THE OTHER GROUND TERMINAL
MULTIPLEXED HIGH RATE RETURN DATA (50 Mbps)	2	TO THE OTHER GROUND TERMINAL
SHUTTLE ANALOG VOICE	2	FROM THE OTHER GROUND TERMINAL
SHUTTLE ANALOG VOICE	2	TO THE OTHER GROUND TERMINAL

8.4.3.3 Local Interfaces

Customer forward and return data and TDMs shall be transported to and from local interfaces as listed in Table 8-9. Local interfaces shall comply with Section 4 of STDN 220.30.

Table 8-9. Local Interfaces

SIGNAL	NUMBER OF PORTS TO LOCAL INTERFACE
CUSTOMER RETURN DATA (100 bps - 10 Mbps) (10 Mbps - 300 Mbps)	 4 4
CUSTOMER FORWARD DATA 100 bps TO 10 Mbps	4
TRACKING DATA MESSAGES (56 kbps)[2]	6[1]

NOTE

[1]ONE FROM THE PRIMARY AND ONE FROM THE REDUNDANT EXECUTIVE ADPE PER SGLT, INCLUDING THE GRGT EXECUTIVE ADPE.

[2]EACH GRGT EXECUTIVE ADPE SUBSYSTEM TDM OUTPUT WILL BE LIMITED TO 19.2 KBPS.

8.4.3.4 Interfaces With Other Sites

The DIS shall have the capability for future addition of external interfaces between the Communications Switch and sites other than the other WSC Ground Terminal, GSFC and JSC.

8.4.4 CTFS Interfaces

DIS equipment, including the GDIS, requiring precision frequency and timing signals shall interface directly with the CTFS Signal Distribution Subsystem. The DIS ADPE Subsystem shall interface via the service bus for monitoring the status of the CTFS (Danzante and Cacique only).

8.5 Operations Requirements

8.5.1 Failure Tolerance

All DIS equipment failures, including the GDIS, shall result in service interruptions whose durations are such that the requirements of Section 13 are met. The system shall have the capability of restoring the failed portion of the system through use of redundancy.

8.5.2 Operator Interfaces

A prime and redundant DIS operator workstation shall be provided in the TOCC, and a Local MMI shall be provided. Either the workstation or local MMI shall be capable of controlling both prime and redundant DIS equipment groups. The use of the MMI for maintenance and fault isolation on redundant equipment chains shall not interrupt on-going services.

8.5.3 Schedule Data Organization

Schedule-related information shall be chronologically logged on the message-log files. Validation and conflict checks shall be made on incoming scheduling messages to determine if the service schedule can be accommodated by the DIS. All schedule-related data shall be accessible by service start time, customer ID (SUPIDEN), and required resources, as a minimum.

Prior to the scheduled start time, setup data shall be extracted from the SHO schedule records and a composite schedule for the DIS shall be generated.

Prior to customer data start time, DIS resources shall be allocated, under DIS ADPE Subsystem control, to each customer data signal. Individual start and stop times and timeline items for each customer data signal shall be displayed on operator request. Upon expiration of the scheduled support, a report shall be generated and presented to the TOCC DIS operator.

The DIS ADPE Subsystem shall notify the operator, via the workstation screen and printer, of resource conflicts or limitations. NCC shall be notified of any inability of the DIS or an SGLT to support an NCC-originated scheduled data service, by means of a SHO accept/reject message. The DIS ADPE Subsystem shall notify the operator, via alerts at the scheduled start and stop times, when a SHO has initiated and terminated.

8.5.4 DIS Initialization, Termination, Restart, and Reset

8.5.4.1 Initialization

The DIS ADPE Subsystem shall control and monitor DIS initialization. The DIS ADPE Subsystem shall be capable of initializing itself under control of the Local MMI. DIS ADPE Subsystem initialization shall include the loading of all required DIS operating systems (OSs), applications software (APS), utilities and databases. After initialization, the DIS ADPE Subsystem shall control initialization of the DIS and TOCC workstation.

After initialization, the DIS ADPE Subsystem shall initialize other DIS Subsystems, log the initialization status of the DIS equipments and display the initialization status at TOCC workstation and Local MMI. The DIS ADPE Subsystem shall establish the checkpoint and configuration database for subsequent reinitialization, restart and failover. After initialization the DIS ADPE Subsystem shall await TOCC or local operator command before starting operation. Reinitialization and restart of redundant DIS Subsystems and equipment shall not affect operation of prime subsystems and equipment.

8.5.4.2 Termination

The DIS ADPE Subsystem shall provide orderly termination of all DIS ADPE operations. DIS ADPE Subsystem termination shall be initiated by the Local MMI or the TOCC workstation. Orderly termination shall provide for resuming of operations without reloading OS, APS, utilities, or static databases. Termination status shall be displayed and logged by the DIS ADPE Subsystem.

8.5.4.3 Restart

The DIS ADPE Subsystem shall be capable of restarting DIS ADPE Subsystem operations after termination without reloading the OS, APS, utilities or static databases. Restart shall occur upon receipt of a command from the TOCC workstation or Local MMI operator. The DIS ADPE Subsystem shall be capable of receiving DIS configuration commands from the TOCC. The DIS ADPE Subsystem shall log the restart command and all DIS configuration commands. The restart status shall be displayed at the TOCC workstation and Local MMI.

8.5.4.4 Reset

On a selective basis any DIS subsystem shall be set to an initial state (reset) and/or initialized remotely by the TOCC workstation or via the Local MMI.

8.5.5 Modes of Operation

The DIS shall include primary and redundant ADPE subsystems. The primary DIS configuration shall consist of one each of the redundant pairs of communications equipments, a DIS ADPE Subsystem, one of the dual service buses, and one TOCC workstation.

The redundant DIS configuration shall consist of the remaining ADPE Subsystem, the service bus which is not in the primary configuration, the remaining communications equipments and the other TOCC workstation. One Local MMI shall be provided to support both the primary and

redundant ADPE subsystems. Independent operation of the primary and redundant configurations shall be provided. The DIS ADPE Subsystems comprising the primary and redundant configurations shall be operator-selectable. The capability for independent operation of the primary and redundant configurations shall provide for two modes of operation of the redundant configuration; the Hot-Standby Mode (HSM) and the Maintenance/Software Delivery Mode (MSM). Any combination of the DIS ADPE Subsystem and communications equipment chains in the redundant configuration shall be capable of independent operation in either the HSM or MSM under operator selection, i.e., the DIS ADPE Subsystem and communications equipment in the redundant configuration shall be independently configurable and operable in the HSM or MSM by operator selection.

8.5.5.1 Hot-Standby Mode

The HSM shall provide for rapid failover to the redundant DIS ADPE Subsystem configured as hot-standby. In the HSM, the detection of failures or anomalies and subsequent failover of a hot-standby ADPE Subsystem, workstation or other DIS Subsystem into the primary configuration shall be accomplished under ADPE control such that all functions of the primary configuration are restored within 10 seconds. The capability of failover of the hot-standby DIS ADPE Subsystem or a selected group of hot-standby communications equipment into the primary configuration under TOCC or Local MMI operator control shall also be provided. This operator controlled failover shall be accomplished within 10 seconds.

8.5.5.2 Maintenance/Software Delivery Mode

The MSM shall provide for performing maintenance functions and for delivering new software on the redundant configuration concurrent with customer support on the primary configuration. Reconfiguration of the DIS ADPE Subsystem from the MSM to the HSM, from HSM to MSM or between primary and redundant operation shall be accomplished within 30 seconds (excluding operator responses) under operator control. Failover to an ADPE in the MSM shall not be permitted.

8.5.6 Monitoring Functions

The DIS ADPE Subsystem shall perform the DIS subsystem and CTFS monitoring functions. The monitoring functions shall include, but need not be limited to:

a. Receiving configuration, status and performance data from the DIS Subsystems (excluding GDIS) and performance and status data from the CTFS (Danzante and Cacique only).

b. Performing quality checks on the received status, performance and configuration data.

c. Alerting TOCC and Local MMI of invalid or abnormal conditions and of configuration changes.

8.5.6.1 DIS ADPE Subsystem Monitoring Alerts

The DIS ADPE Subsystem shall receive status and performance data from the DLM and other DIS equipment every 5 seconds, except for the secure multiplexer/demultiplexer equipment,

which shall be monitored every second. The monitoring requirements for status and performance data shall be as follows:

a. Status Data. The DIS ADPE Subsystem shall monitor the status input from the DLM, other DIS equipment, and the CTFS to assure operation as scheduled. The DIS ADPE Subsystem shall alert the DIS TOCC workstation and the DIS ADPE Subsystem Local MMI of failure to receive status data for ten seconds. Upon receiving status data from the DLM and other DIS equipment, the DIS ADPE Subsystem shall check the quality and compare the received status to the previously received status data to determine if the status level has changed. The DIS ADPE Subsystem shall identify status changes that require alerts and shall alert the DIS TOCC workstation and the DIS ADPE Subsystem Local MMI. The DIS ADPE Subsystem shall provide for operator modification of the status changes which cause alerts.

b. Performance Data. The DIS ADPE Subsystem shall monitor the performance data input from the DLM to assure operation as scheduled. The DIS ADPE Subsystem shall alert the DIS TOCC workstation and the DIS ADPE Subsystem Local MMI of failure to receive performance data for ten seconds. The DIS ADPE Subsystem shall check the quality and compare the received performance data with threshold levels to determine if alerts are required, and shall alert the DIS TOCC workstation and the DIS ADPE Subsystem Local MMI upon threshold violations. The DIS ADPE Subsystem shall provide for operator modifications of the threshold levels requiring alerts.

8.5.7 Control Functions

The DIS APDE Subsystem shall provide configuration and control of the DIS in the three modes of operation defined in Section 4.5.2.

8.5.7.1 Failover

Failover to the redundant DIS ADPE Subsystem (either automatically or manually) shall occur only if the redundant ADPE Subsystem is in HSM. An alarm shall be displayed at the TOCC and the Local MMI whenever the prime DIS ADPE Subsystem fails and the redundant is not in HSM. The prime DIS ADPE Subsystem shall accept commands from the TOCC workstation or Local MMI to perform DIS ADPE Subsystem failover. The DIS ADPE Subsystem shall notify the TOCC and the Local MMI that failover has occurred.

Failover to available data ports of the prime and redundant 75 data port multiplexers shall be provided, i.e., failure of multiplexer data ports shall cause failover to data ports of the same multiplexer, if available. Failover to the redundant multiplexer shall be based on DLM of the multiplexer outputs and on the availability of data ports in the prime multiplexer for individual data port failover.

8.5.8 Logging and Archiving

The DIS ADPE Subsystem shall record status and performance data from the DLM, other DIS Subsystems, and the CTFS.

8.5.8.1 Logging

The DIS ADPE Subsystem shall maintain a log of the following data:

a. Status Data. All status data shall be time-tagged and logged. The DIS ADPE Subsystem shall maintain the status data log to support the monitor and analysis function.

b. Performance Data. The DIS ADPE Subsystem shall time-tag and log all received performance data.

c. Operations Messages. The DIS ADPE Subsystem shall time-tag and log all received operations messages (SHOs and OPMs). The DIS APDE Subsystem shall also time-tag and log all transmitted operations messages (OPMs, ODMs, and SLRs).

d. TOCC and Local MMI Commands. The DIS ADPE Subsystem shall time-tag and log all TOCC and Local MMI commands.

8.5.8.2 Archiving

All logs shall be periodically archived. This data shall be available for off-line analysis. The ADPE shall provide sufficient storage media to archive a minimum of twenty-four (24) hours of logged data on a single storage unit (i.e., one tape).

8.5.8.3 Format

The format of the log and archive data files shall be the same.

8.5.9 DIS ADPE Subsystem Delogging

The DIS ADPE redundant and prime subsystems shall provide processing and analysis of DIS log data, upon operator request. The data logs and the archive data, after restoration of the archive to the system, shall be processed, analyzed and printed on a hard copy printer and/or displayed upon TOCC or Local MMI operator request. All displayed and printed data shall include time tags. The processing capability shall include as a minimum:

a. Delog at variable rates, including the initial display rate, for anomaly resolution.

b. Delog by operator time selection.

c. Delog of selected messages only.

d. Delog of selected messages and retransmission to GSFC and JSC.

e. Delog of only data value changes.

8.5.10 Provide Local Control Mode Support

During local control mode the functions listed in Paragraph 4.5.2.c shall be supported at all WSC ground terminals.

a. The following customer and TDRS functions shall be provided:

   1. Allocation of the TDRS, Spare 19 meter antenna (Danzante and Cacique only), EET antenna, and SGLT service chains.
   2. SGLT Frequency mode switchover between S-band and Ku-band frequencies.
   3. Initiation and termination of TDRS tracking.
   4. Initiation and termination of TDRS telemetry collection.
   5. Initiation and termination of command processing.
   6. Configuration of equipment to use a GSTDN station antenna.
   7. Schedule and control of the playback recorder.
   8. Reservation of equipment for maintenance and testing.
   9. Cancellation of a customer or TDRS support service.
   10. Switchover to the operations data path.

b. Initiation of the operations messages listed below shall be supported.

   1. OPM-02 - Reacquisition.
   2. OPM-03 - Reconfiguration (except for cross support services and DQM, max/min EIRP, and G2 Inversion parameters).
   3. OPM-04 - Forward Link Sweep.
   4. OPM-12 - Cancel SHO.

Section 9. TDRSS Operations Control Center (TOCC)

This section specifies the TDRSS Operational Control Center (TOCC) functional, performance, interface requirements, and operational requirements. Throughout this document, the TOCC at the Danzante and Cacique Ground Terminals is referred to as the "TOCC". When differences between the Danzante and Cacique TOCCs exist, however, the TOCC at Cacique Ground Terminal is referred to as "TOCC1",and the TOCC at Danzante Ground Terminal is referred to as "TOCC2".

9.1 TOCC Overview and Architecture

The TOCC shall be the central operational control facility. The TOCC shall contain operational consoles in which shall be housed the operator workstations and the peripheral equipment unique to the individual operator positions. The TOCC shall exercise control over designated systems/subsystems by providing monitoring and data entry devices, e.g., workstations with intelligent terminals, alarms, and peripheral devices.

9.1.1 Overview

Figure 9-1 shows a TOCC workstation reference configuration. Workstations shall provide operator control and displays for the operation and maintenance of the WSC Ground Terminals. In addition, workstations in the TOCC1 shall provide operator control and displays for the operation and maintenance of the GRGT. The workstations shall be intelligent terminals with peripheral and ancillary equipment. As a minimum, each workstation shall consist of:

a. CPU and memory.

b. Color graphics processor and display.

c. Keyboard (alphanumeric, cursor control, and function keys).

d. Hard copy device.

e. Mass Storage.

f. Interactive device (e.g., a mouse).

g. Alarms (aural and visual).

h. LAN interface unit.

i. Intrasite/Intersite Communications System (ICS) equipment.

j. CTFS Interface.

k. Event Timer.

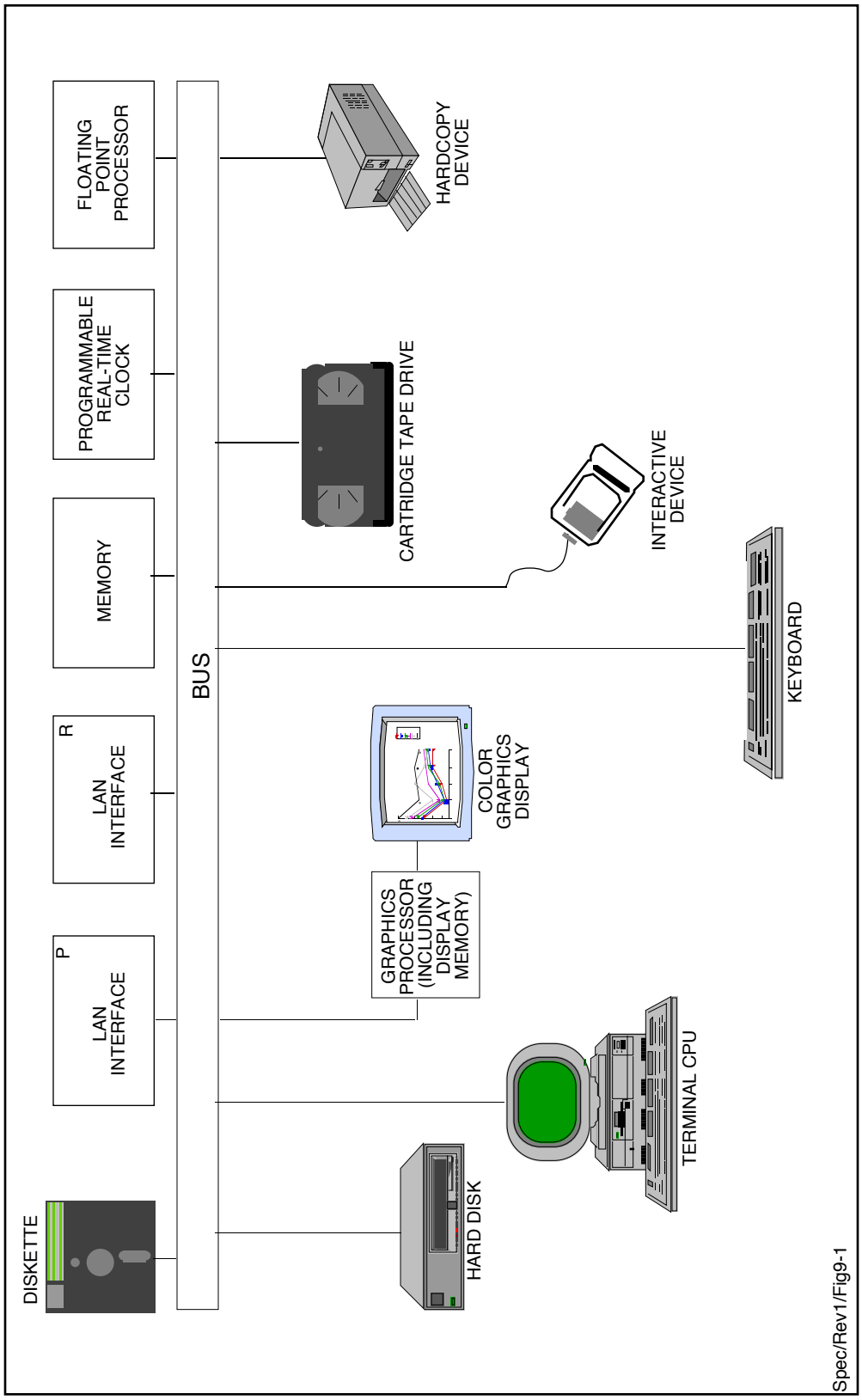

Figure 9-1. Reference TOCC Workstation

9.1.2 Physical Layout

The TOCC equipment shall be laid out in such a manner as to minimize operator distraction. Operators shall have unobstructed views of displays. Equipment, such as high speed printers, which generate high noise levels shall be made unobtrusive through the use of sound dampening enclosures and by location removed from the operator position.

9.2 Functional Requirements

The TOCC shall provide the operators with the capability to monitor, coordinate, control, and report the performance of SGLT Subsystems, DIS, and the S-band TT&C System. The functional requirements common to all workstations are specified below.

9.2.1 ADPE Access Control

A secure, tamper-proof method shall be provided to establish control of and report access to ADPE subsystems to prevent inadvertent or unauthorized control actions.

9.2.2 Common Workstation Functions

Each workstation shall perform as a minimum the following functions:

a. Store all tables, menus, and display and report templates.

b. Provide syntax and reasonableness checks of operator inputs.

c. Provide hardcopy of displays upon operator requests.

d. Provide aural/visual alarms to operator, with reset capability for aural alarms.

e. Log operator commands and anomaly conditions automatically.

f. Log status and screen displays under operator control.

g. Retrieve and display logged data upon operator request.

h. Monitor and report workstation health status.

i. Provide the operator with configurable, multiple, concurrent screen displays (windows), activated from either the keyboard or the interactive device.

j. Support operator log on/log off for access validation.

k. Provide security labeling of displays and printouts for classified information.

9.2.2.1 SGLT Workstation Functions

Each SGLT workstation shall perform the following additional functions:

a. Receive and transmit messages via the CDCN LAN. These messages shall include:

1. Operator requests to the Executive, PMM, USS, and TT&C ADPE Subsystems.
2. Data from the Executive, PMM, USS, and TT&C ADPE Subsystems.
3. Workstation health status to the Executive ADPE Subsystem.

b. Format and display SGLT and TDRS configuration, operator selected TDRS telemetry parameters, signal flows, equipment health status, and service quality. Tabular, graphics, and combination tabular graphics formats shall be provided.

c. Serve as backup for other SGLT workstations.

9.2.2.2 S-band TT&C Workstation Functions

Each S-band TT&C workstation shall perform the following additional functions.:

a. Receive and transmit messages via the S-band TT&C ADPE LAN. These messages include:

1. Operator requests to the S-band TT&C ADPE Subsystem.
2. Data from the S-band TT&C ADPE Subsystem.
3. Workstation health status to the S-band TT&C ADPE Subsystem.

b. Format and display TDRS configuration and health status. Tabular, graphics, and combination tabular graphics formats shall be provided.

9.2.2.3 DIS Workstation Functions

Each DIS workstation shall perform the following additional functions:

a. Receive and transmit messages via the DIS APDE LAN. These messages shall include:

1. Operator requests to the DIS ADPE Subsystem.
2. Data from the DIS ADPE Subsystem.
3. Workstation health status to the ADPE Subsystem.

b. Format and display DIS configuration, signal flows, equipment health status, and service quality. Tabular, graphics, and combination tabular graphics formats shall be provided.

c. Serve as backup for other workstations.

d. Manual entry of OPMs and SHOs to be saved for future retrieval and initiation.

e. Retrieval and initiation of previously entered OPMs and SHOs.

9.2.3 Workstation Displays

The features of workstation displays and the associated operator capabilities shall include:

a. Multiple Display Types. Dynamic data, menus, and data tables shall be displayed. The displays may incorporate text, tabular, or graphic formats.

   1. Dynamic Data. Dynamic data displays shall include information regarding customer service status and schedules, TDRS spacecraft health, selected TDRS command and telemetry, SGLT configuration, health and status, PMMS health monitoring data, DIS health status and operational messages.

   2. Displays and Menus. Displays and menus shall provide information on operator entry of data including:

      (a) Logical options.

      (b) Rules of syntax.

      (c) Allowable numerical range.

      (d) Default values.

      The workstation operator shall be able to access the menus sequentially. The operator shall also be able to bypass unneeded menu assistance.

   3. Data Tables. The operator shall have the capability to store and recall data.

b. Classification. The security classification shall be included in the display of classified information.

c. Commonality/Interchangeability. All TOCC workstations shall have the following features:

   1. Identical physical configuration and peripherals.

   2. Standardized log-on procedures.

   3. Uniform keyboard operational functions, e.g., the same key for clearing the screen.

   4. A common display layout.

   5. Standardized text and acronym displays.

   6. Standardized display features to identify anomalies.

9.2.3.1 Installation of New Display Formats

Installation of new display formats shall not interfere with ongoing TOCC operations. The installation process for new displays shall include:

a. Time and date of installation.

b. Version number.

c. Display identity.

d. Access authorization list.

9.2.3.2 Display Call-Up

The TOCC shall provide TOCC operators with the ability to call up a display by display name. The display identity and the requesting operator's identity shall be automatically validated.

9.2.4 Operator Dialogue

Except for the log-on password, all operator dialogue shall be displayed on the screen. All operator inputs shall be acknowledged after validation and acceptance.

9.2.5 GMT Display

The displayed Greenwich Mean Time (GMT) shall be updated at the refresh rate to indicate that the workstation is functional. Upon detection of a failure, an alert, including GMT, shall be displayed.

9.2.6 Printouts

Provisions for hardcopy printouts of information shall include the following features:

a. On Demand Hardcopy Printouts. The TOCC shall provide the operator with the capability to request the hardcopy of any screen display or report.

b. Command Queuing of Printouts. The TOCC shall provide the operator with capability to generate a print queue of hardcopies.

c. Cancellation of Print Queues. The TOCC shall provide the operator with capability to cancel the print queue before or during queue processing.

d. Classification. Each classified sheet shall be labeled with the required security information.

e. GMT Time Tag.

9.2.7 Flexibility in the TOCC Equipment and Procedures

Sufficient TOCC workstations shall be provided to ensure compliance with R/M/A requirements specified in Section 13. All TOCC workstations shall be functionally interchangeable via log-on capability.

9.2.8 Status Monitoring

The TOCC shall provide the capability to monitor the configuration, mode of operation, performance, and status of the SGLT Subsystems, DIS, and the S-band TT&C System.

9.3 Performance Requirements

The TOCC performance requirements shall include the following:

a. Access. Operator log-on shall be completed within 2 minutes. Operator log-off shall be completed within 30 seconds.

b. Display Activation. Operator-requested displays shall be presented to the operator within 7 seconds.

c. Display Refresh. For each display window in which dynamic data is displayed, data shall be refreshed at least every 5 seconds.

d. Printout. A single hardcopy screen dump shall be completed within 2 seconds.

e. Fault Indicators. All alerts shall be logged. Alert logging shall be concurrent with the operator alert notification. Alerts shall be displayed on the screen within 500 milliseconds of the alert condition detection. All alerts for which action is pending shall be retained in a queue.

9.4 Interface Requirements

Each TOCC comprises the following TOCC workstations:

a. SGLT TOCC workstations (a minimum of prime and redundant TT&C TOCC workstations per SGLT and prime and redundant USS TOCC workstations per SGLT).

b. Prime and redundant S-band TT&C TOCC workstations.

c. Prime and redundant DIS TOCC workstations.

These TOCC workstations interface with associated ADPE subsystems and with the CTFS as shown in Figure 9-2.

9.5 Operations Requirements

The operation of the SGLTs shall be performed in the TOCC. The TOCC shall provide for monitoring and control of the TDRSs and of customer services. The TOCC shall provide for a voice interface with other NASA centers to provide operational coordination for customer support and TDRS control. The TOCC shall be the prime point of contact for all coordination with the NCC, FDF, JSC and customer MOCCs. AllGround Terminal operational activities shall be directed from the TOCC. The TOCC shall be the focal point for coordination of fault isolation, corrective and routine maintenance activities and direction to operations support personnel. The TOCC shall provide for continuous monitoring of the status and health of the TDRSs and the hardware and software systems. A minimum of four (4) independent workstations for each SGLT shall be located in the TOCC. The number and location of the workstations in the TOCC shall be consistent with the RMA performance requirements of Section 13. A reference configuration for a TOCC workstation is shown in Figure 9-1. Under normal conditions, the operation of the SGLTs, S-band TT&C, and DIS shall be controlled from workstations located in the TOCC. Under contingency conditions, e.g., LANs inoperative, control shall be exercised from the Man Machine Interfaces (MMI) of the ADPE subsystems. The functional requirements for these MMIs are included with their respective subsystems.

9.5.1 State Vector Review

The TOCC shall provide the operator with the capability to determine the availability of state vectors for customer support.

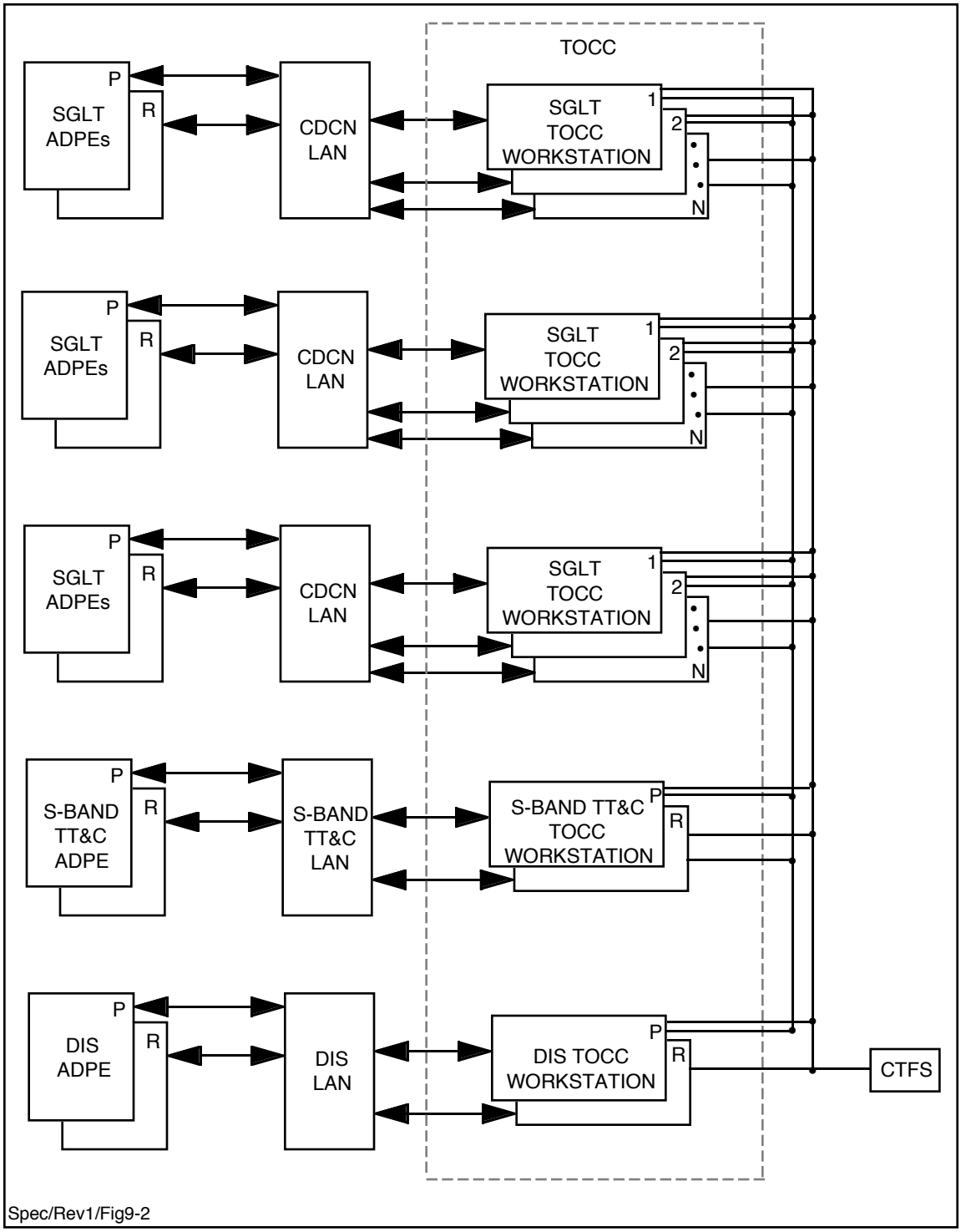

Figure 9-2. TOCC Interfaces

9.5.2 Spacecraft/Mission Information

The TOCC shall provide the operator with the capability to determine the availability of state vectors for customer support.

9.5.3 Fault Indication

TOCC operators shall receive clear and unambiguous fault notification through alerts and alarms and shall be able to access and act on fault notification quickly and unambiguously, even if multiple faults occur.

a. Fault Indicator Generation. The systems/subsystems shall send indicators to TOCC workstation operators via appropriate ADPE Subsystems when faults are detected. These indicators shall activate TOCC responses, including displays, alarms, and logging operations. The TOCC shall provide the operator with capability to suppress alarms prior to anticipated fault indications.

b. Alarms. Aural and visual alarms shall be provided to direct the operator's attention to system status messages, anomalous conditions, or to actions requiring operator intervention. The TOCC shall provide the operator with the capability to reset alarms.

c. Alert Displays. Alerts shall be displayed in descriptive summarizing text messages with GMT. The use of identification codes requiring table or dictionary interpretation shall not be used.

9.5.4 Delogging

9.5.4.1 Archive Delogging

The TOCC shall have the capability to delog archive data prepared by any system/subsystem (See Section 5.6.1.1.1).

9.5.4.2 Delogging Format

Data delogging shall provide the capability to interpret data in natural English upon operator request.

9.5.4.3 Delog Options

There shall be the following delog options:

a. Variable delog rate for display updates.

b. Delog by operator-selected time interval.

c. Delog by operator-selected messages.

9.5.5 Message Review

The system shall provide the operator the capability to review all operations message log entries for the past 2 hours. All operation messages shall be available for retrieval within 5 seconds.

9.5.6 Intrasite/Intersite Communications

There will be provision for communication between TOCC workstation operators, and other ground terminal personnel through the Intrasite/Intersite Communications Systems (ICS).

9.6 Event Timers

Each TOCC workstation shall be provided with an event timer. Each timer shall be individually controlled and shall be capable of counting up or down. Displays shall provide spacecraft time-of-day and mission elapsed time.

Section 10. Software Requirements

The software shall be integrated with the systems and subsystems to satisfy functional and operational requirements. (For the purpose of this specification, the term "software" shall include all firmware imbedded in the system components). The software shall be developed in accordance with the Defense System Software Development (DOD-STD-2167) document as tailored for the WSC (STGT Tailored Version). This section provides software design, development, and implementation requirements and contains:

a. System/subsystem definition design and implementation.

b. Performance verification matrix.

c. Language/development tools.

d. WSC ADPE Operations concept.

e. System modeling requirements.

10.1 System/Subsystem Definition, Design and Implementation

TheWSC ADPE software system/subsystem design shall be a modular, top-down design. The software requirements shall be translated into a top-level software architecture design. The systems software requirements shall be allocated to Computer Software Configuration Items (CSCIs) in accordance with DOD-STD-2167, STGT Tailored Version. This allocation shall be performed using a top-down design approach.

10.1.1 Software Design and Implementation Requirements

This section provides the software design and implementation requirements. The objectives of these requirements are to ensure correctness, reliability, efficiency, and maintainability of the software. The following paragraphs define these requirements.

10.1.1.1 Software Design

In addition to the functional and performance requirements specified in other paragraphs of this specification, the software design shall:

a. Provide error prevention, error detection, fault tolerance, and recovery from abnormal conditions.

b. Support system modification, enhancement, and expansion throughout the expected lifetime of the WSC. Provision shall be made in instruction code, data tables, and databases, to accommodate additional, modified and enhanced functions, new equipments, and new data.

c. Provide applications programs and physical data independence to allow modification of physical data without requiring program modification.

d. Provide data integrity. Software routines/tools to provide or support the following capabilities shall be provided:

   1. Certification and authentication.

   2. Operating system integrity.

   3. Residue cleanout.

   4. Audit trails and trace routines.

e. Assure that the system is in a correct, well defined state upon recovery from a fault and that all necessary processing interrupted by a fault is properly continued after recovery.

f. Incorporate the capability to facilitate software development and maintenance without large program recompiles and reassemblies, without complex and time consuming linking/loading operations and with readily utilizable debug and utility routines.

g. Provide for performance and requirements traceability.

h. Use a single program design language (PDL) in all software design work except where not cost beneficial.

10.1.1.2 Software Implementation Requirements

All WSC software shall be implemented in accordance with DOD-STD-2167, Appendix C. These standards shall include modern structured programming techniques, unit and variable naming conventions, readability, formatting conventions and the use of descriptive comments.

10.2 Performance Verification Matrix

The performance verification matrix shall assure that all top-level requirements are satisfied in low-tier specifications and shall permit verification of all requirements through traceability to the test plans. The performance verification matrix shall provide:

a. Traceability from the top-level requirements to the software specification.

b. Traceability from software specification to software preliminary design.

c. Traceability from software preliminary design to software detailed design and coding.

d. Traceability from software detailed design and coding to integration and test.

Any implicit or inferred (derived) requirements included in the design and implementation shall be identified as such.

10.3 Languages/Development and Maintenance Tools

This section provides the software program languages, development and maintenance tools requirements. All software required for the design, development, documentation, configuration management and maintenance of the WSC shall be provided and executable in the SMTF. The tools required in this section are minimal requirements.

10.3.1 Program Language

Maximum use of a single high-order language (HOL) is required for all WSC software including operational, simulator, training, and support software. Alternate HOLs or assembly language shall be used only with NASA approval.

10.3.2 Development and Maintenance Tools

Automated support tools shall be used to record, analyze, develop and maintain the software. These tools shall provide:

a. Performance verification support as specified in Section 10.2.

b. Configuration control and tracking of changes in design and requirements during all phases of software development and the maintenance phase.

c. Modeling and simulation to support processing resource allocation and to predict system performance under varying workloads as specified in 10.5.

d. Printed outputs including source listings, error lists, cross-reference lists, flow charts, hierarchy charts, design change history logs, etc.

All tools used during software design and development and their documentation shall be provided to the SMTF.

10.3.2.1 Source Edit Capability

An editor capable of creating, deleting, modifying, examining and listing program source files, data files, data file attributes and data file schema shall be provided. Compilers, assemblers, linker/mappers, loaders, debuggers and utilities shall be accessible to and executable by the editor.

10.3.2.2 Program Object Mapping Capability

A mapper which shall have the capability to gather, link, and combine specified object files into an executable file shall be provided.

10.3.2.3 Standards Compliance Verification Capability

Automated tools to determine that the software is developed and maintained according to the specified standards shall be provided. Tools shall include auditors to determine that software is coded to standards; e.g., the code is structured, units are of appropriate length, units are structured, and program, file and data variables are named according to the established standard. Reports shall tabulate the results of audit. A cross reference of all parameter, unit, program and variable names shall also be produced.

10.3.2.4 Debug Capability

A debugger which has the capability to control, monitor, and trace the execution of the software shall be provided. The capability of the debugger shall include referencing and altering software units, common data areas, control blocks, and program variables.

10.4 WSC ADPE Operations Concepts

The WSC ADPE operations concept shall be in accordance with DOD-STD-2167.

10.5 System Modeling Requirements

System modeling shall be used in the selection, analysis and validation of the ADPE and software architecture and design. The system model shall incorporate NASA-provided operations scenarios representing typical and worst case customer support loading. The system model shall include modeling of ADPE CPU processing speed, memory size, auxiliary storage, local area network (LAN) load, hardcopy printer load, subsystems interface requirements, NCC messages, TDRS telemetry and control requirements and customer TDMs. All modeling, simulation and prototyping software shall be provided and shall be executable in the SMTF.

Section 11. Software Maintenance and Training Facility (SMTF)

The SMTF shall contain dedicated equipment and software tools required for the maintenance and testing of the WSC software and the training of software maintenance and operations personnel. The SMTF shall be located at the Danzante Ground Terminal only.

The software maintenance function of the SMTF shall include all activities required to produce, deliver and document corrections, modifications, adaptations and enhancements of existing software for the WSC. The maintenance activity shall include the adaptation of third party software for use in the WSC. The SMTF shall provide software Configuration Management (CM), including change control, configuration status accounting and software Quality Assurance (Q/A), and shall provide software tools for the automation of these functions.

The SMTF shall have the capability of testing and validating software for the WSC. Testing shall be performed with dedicated SMTF equipment and shall utilize simulators in the SMTF.

The SMTF shall serve as a training facility for WSC operations and software maintenance personnel.

The SMTF shall maintain all final design source code and executable code, free of patches. Facilities shall be provided to store the latest versions of software for the WSC in a manner secure from alteration by malicious tampering or destruction by fire, flood, or other disaster.

A capability for processing and analysis of all archived logged data, without impact to operational ADPE, shall be provided. The data logs shall be processed, analyzed, and capable of generating hard copy output or displays upon operator request. The processing shall include but not be limited to trend and stability analysis. All displays and hard copy outputs shall include time tags. Delogging shall include the capability of displaying and generating hard copy outputs of only data value changes.

A reference SMTF ADPE architecture based on the SGLT CDCN Reference Architecture of Figure 5-21 and the S-band TT&C System Reference Architecture of Figure 6-2 is shown in Figure 11-1.

11.1 Equipment Requirements

The SMTF shall contain ADPE equipment identical to the equipment performing the same functions in the SGLT, S-band TT&C, DIS, TOCC and additional equipment required for implementing the SMTF functions. In order to provide a realistic and effective training environment, the SMTF operator training position shall be identical to the TOCC workstation in configuration, connectivities, and physical layout.

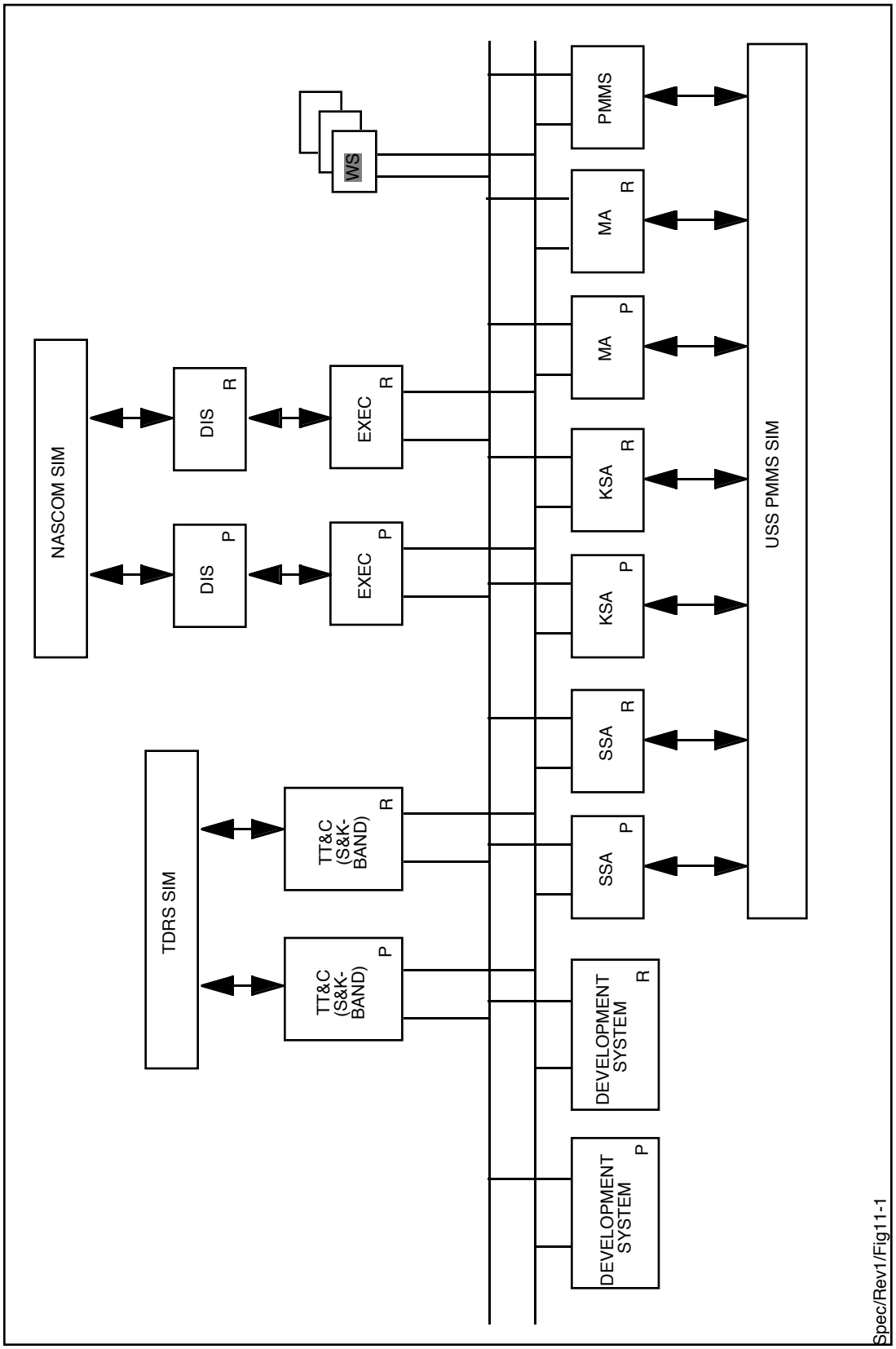

Figure 11-1. SMTF Reference Architecture (Danzante Only)

The SMTF shall be implemented to provide for testing failover software and procedures and for training in failover operations.

The SMTF shall include hardware and software tools required to develop and maintain firmware embedded in the WSC hardware.

11.1.1 Testing/Simulators

Simulator equipment shall be provided to support the use of operational scenarios generated off-line. The operational scenarios generated off-line shall be generated (1) from SHOs and OPMs received from the NCC and logged at the operational ADPE or the SMTF or (2) from the locally generated SHOs and OPMs. Processing, editing and manipulation of the logged SHOs and OPMs to provide realistic operational scenarios shall be provided. As a minimum the simulators shall:

a. Provide an environment similar to the operating environment of a WSC Ground Terminal for the purpose of training operations personnel and for the support of software testing.

b. Provide realistic adaptive responses to commands issued by the SMTF ADPEs.

c. Provide command responses and status input, identical for the purpose of software checkout, to those provided by the simulated equipment.

d. Provide the means for an instructor/operator to initiate simulated errors and anomaly scenarios.

e. Provide an accurate simulation of the NCC interface, including the message protocol and message formats defined in 530-ICD-NCC-FDF/WSC.

f. Provide an interface between the DIS ADPE and a BED for connecting the SMTF with test ADPE in the NCC. The DIS ADPE interface to the BED shall be the same as in the DIS.

g. Provide an interface to accept and use the operational scenarios described in 11.1.1.

h. Provide for operator generation of scenarios, the storage of the scenarios, and the retrieval and utilization of the scenarios.

The TDRS Simulator software and documentation will be provided by NASA.

11.2 Software Delivery Tools

The SMTF shall provide software tools to support the delivery of software from the SMTF to the operational ground terminals and to produce reports detailing the status of the delivery and compliance with the Software CM Plan, Build/Release Plan and Test Plan as described in the tailored DOD-STD 2167 (STGT Tailored Version).

The delivery of software shall not impact the function of the SMTF in either the RED or BLACK configuration.

11.3 Configuration Management and Quality Assurance

The SMTF shall provide software tools, procedures, ADPE, and other resources required to perform the SMTF Configuration Management and Quality Assurance functions.

11.4 Maintenance Tools

Maintenance tools shall be provided to enable maintenance personnel to efficiently perform software maintenance consistent with the requirements of this section. Specific software tools are described in Section 10.

11.5 Training Requirements

The SMTF shall provide facilities, equipment, software training aids and staff for training of software maintenance personnel and operations personnel.

11.6 Security Requirements

The SMTF shall be capable of operating in either the BLACK (system-high unclassified) or RED (system-high SECRET) configurations.

Section 12. Maintenance Test Group (MTG)

The contractor shall provide a Maintenance Test Group (MTG) consisting of general and special test equipment and other resources to support first level maintenance of all WSC systems and subsystems. First level maintenance shall include;

a. Scheduled preventive maintenance.

b. Fault isolating to the level of an LRU. Fault isolation to the level of a line replaceable item within an LRU (if any) shall be performed if the time required is consistent with the operational maintainability requirement.

c. Replacement of a failed LRU or line replaceable element within an LRU.

d. Testing to ensure that the system/subsystem has been restored to operational condition.

e. Alignment and tuning.

12.1 Maintenance Test Group (MTG) Functional Requirements

The MTG shall use information derived from PMMS monitoring and test functions as an aid in determining the location of a fault. The MTG shall:

a. Provide the capability for injection test stimuli in off-line equipment and control the configuration of test.

b. Measure the response of the equipment to the stimuli at designated test points.

c. Display the results of tests in a manner which permits maintenance personnel to localize failures.

12.2 Scope

The MTG shall include use of:

a. Apriori fault detection information from the WSC operations systems/subsystems.

b. Special test equipment, including Automated Test Equipment (ATE), to test the WSC operations systems/subsystems.

c. Built-In-Test/Built-In-Test-Equipment (BIT/BITE) provided in WSC operations systems/subsystems.

d. LRU front panel controls, status indicators, and monitor and test signal injection points.

e. General purpose test equipment.

12.2.1 Special Test Equipment

Special test equipment includes all test equipment specifically fabricated or modified to meet development, integration, and testing requirements. Special test equipment shall be provided only if off-the-shelf test equipment to perform test functions is unavailable. The contractor shall provide full documentation for special test equipment.

12.2.2 Standard Equipment

Standard maintenance and test equipment is defined to include all equipment, tools, and maintenance outfitting included in commercial and Government catalogues and stocks such as common hand tools, general test equipment, safety equipment, and pre-fabricated maintenance benches. Test equipment that may be tailored for specific applications through the addition of application modules is defined to be standard equipment. The contractor shall provide a listing of recommended standard equipment for Government approval.

12.3 Interfaces

The MTG shall interface with the WSC operations systems/subsystems to receive apriori fault information and to report post-maintenance status.

Section 13. Reliability/Maintainability/Availability (R/M/A) Requirements

This section specifies the reliability, maintainability, and availability (R/M/A) requirements for the WSC. Two categories of availability requirements are defined: inherent availability and operational availability.

13.1 Reliability

The measure of reliability for each WSC Ground Terminal shall be the mean time between failures (MTBF). The MTBF shall be the 10-year life cycle of a fully operational WSC Ground Terminal divided by the predicted number of failures.

13.1.1 Mean Time Between Failures (MTBF)

The MTBF shall be determined in accordance with MIL-HDBK-217, Reliability Prediction of Electronic Equipment. The Parts Count Reliability prediction method of MIL-HDBK-217 shall be used in the initial stages of system design and shall shift to the Parts Stress Analysis Prediction method, or other reliability modeling technique approved by NASA, at the time when a firm, detailed parts list is available.

13.2 Maintainability

Maintainability is characterized by the mean time to repair (MTTR) and shall include the corrective maintenance time but not logistics and administrative delays inherent to the maintenance process. Logistics delays include the time required to provide replacement units at the failure location (replacement units shall be presumed to be available on-site). Administrative delays shall include the time required for maintenance personnel and test equipment to arrive at the failure location.

Mean time to repair (MTTR) as the measure of maintainability is defined as the sum of corrective maintenance times at any specific level of repair, divided by the total number of failures within an item repaired at that level, during a particular interval under stated conditions. The MTTR shall include the maintenance times for the first level maintenance as defined by Section 12.0. Time required for second level maintenance as defined in Section 18.2.1.3 is not a part of MTTR. A Maintainability Status Report shall be provided in accordance with Task 104 of MIL-STD-470, and shall include any changes in predicted maintainability parameters.

Each WSC Ground Terminal shall have an MTTR not exceeding 30 minutes during the expected 10 year lifetime of the Ground Terminal, except for the Antenna Subsystem. The MTTR for the Antenna Subsystem shall not exceed 1 hour. The maximum time to repair shall not exceed 1 hour for the 90th percentile of failures, except that the maximum time to repair Antenna Subsystem failures shall not exceed 2 hours for the 90th percentile of such failures. These MTTRs shall be applicable to GRGT for components with locally available sparing.

13.2.1 Fault Isolation

To facilitate isolation of failures, a system of fault isolation shall be provided which shall meet the following requirements and constraints:

a. Failures shall be isolated to one chassis or Line Replaceable Unit (LRU), whichever is smaller. Manual intervention can be used to isolate failures to below the chassis or LRU level.

b. Modes shall be provided to enable the repeating and/or bypassing of tests to check the operation of the subsystems while using internal or external test equipment.

13.3 Inherent Availability (A_i)

Inherent availability (A_i) is the probability that a system or equipment, when used under stated conditions in an ideal support environment (i.e., using available tools, spares, and personnel) will operate within specifications at all times. It excludes preventive maintenance actions, logistics supply time, and administrative downtime and is expressed as

$$A_i = MTBF/(MTBF + MTTR)$$

where MTBF = mean time between failures and MTTR = mean time to repair.

For each WSC Ground Terminal, the inherent availability for any period of 10,000 hours shall be as specified in Table 13-1. A single or multiple access service is defined as one non-redundant forward and return data path between the antenna and the GSFC/JSC common-carrier input from the Data Interface System and includes all systems/subsystems necessary to maintain customer forward, return and tracking and TDRS TT&C services within performance specifications.

Table 13-1. A_i for each WSC Ground Terminal

SERVICE TYPE	DANZANTE/CACIQUE	GRGT
EACH SINGLE ACCESS WITH ASSOCIATED SERVICES	0.9985	0.972
EACH MULTIPLE ACCESS WITH ASSOCIATED SERVICES	0.9985	0.972
EACH S-BAND TT&C SERVICE CAPABILITY	0.999	0.996

The single and multiple access services, as defined, from GRGT include the GRGT CC. The inherent availability calculation for the single and multiple access services from GRGT include the availability of the GRGT CC (0.995) as specified in 530-ICD-GRGT-GCF.

13.4 Operational Availability (A_O)

The operational availability (A_O) of each ground terminal shall be defined in terms of the individual operational availabilities of the following:

a. Customer Services:

   1. Each single access customer service, including tracking services.

   2. Each multiple access customer service, including tracking services.

   3. Each cross support customer service, including tracking services.

b. S-band TT&C for any TDRS spacecraft.

13.4.1 Operational Availability of Customer Services

For each SGLT there shall be a communications path from a ground antenna RF interface with an assigned TDRS to a DIS external interface, such that the operational availability, measured over a 10,000 hour interval, can be provided for the services as specified in Table 13-2.

Table 13-2. Customer Services A_o for each WSC Ground Terminal

SERVICE TYPE	DANZANTE/CACIQUE	GRGT
EACH SA CUSTOMER SERVICE, INCLUDING TRACKING SERVICES	0.9999	0.9743
EACH MA CUSTOMER SERVICE, INCLUDING TRACKING SERVICES	0.9999[1]	0.9743
EACH CROSS SUPPORT CUSTOMER SERVICE, INCLUDING TRACKING SERVICES	0.9999	0.9743
NOTE [1]MA CUSTOMER SERVICES SUPPORT SHALL BE PROVIDED ON TWO SGLTS AT EACH DANZANTE AND CACIQUE.		

For the purpose of achieving this operational availability at each Danzante and Cacique, the existence of a redundant SGLT antenna shall be assumed. Availability calculations for the deployed system shall not include downtime that would not have occurred if the third SGLT antenna (for each Danzante and Cacique only) were available as a spare. A customer service communications path includes the SGLT (including TDRS Ku-band TT&C and CDCN LAN), necessary CTFS services, and a communication path through the DIS to the external interface. The TOCC workstations should be included in the Ao computation to the extent that they are required in providing the services of Section 13.4 and in failovers to achieve the required Ao. A customer service communications path for GRGT includes the GRGT CC. The operational

availability of the GRGT CC (0.995) as specified in 530-ICD-GRGT-GCF, was used to calculate the required Ao for GRGT. Redundant paths may be used in achieving this Ao.

13.4.2 Operational Availability of S-band TT&C

Each TT&C system shall be capable of providing all TDRS S-band TT&C operations, using uplink and downlink communications through the S-band TT&C Antenna Subsystem (Danzante and Cacique only) or the SGLT Antenna Subsystem (Danzante and GRGT only), for any assigned TDRS and shall do so with an operational availability, measured over a 10,000 hour interval, as specified in Table 13-3. This operational availability shall include the ability to assign, designate and acquire any spacecraft in the TDRS constellation for the equipment configurations of each ground terminal as specified in Table 13-3, including necessary CTFS services. Redundant paths may be used in achieving this A_O.

Table 13-3. S-band TT&C A_o for each WSC Ground Terminal

S-BAND TT&C SERVICE EQUIPMENT CONFIGURATION	DANZANTE	CACIQUE	GRGT
S-BAND TT&C ANTENNA SUBSYSTEM, S-BAND TT&C GROUND EQUIPMENT, S-BAND TT&C ADPE SUBSYSTEM	0.9999	0.9999	N/A
SGLT ANTENNA SUBSYSTEM, SGLT TT&C GROUND EQUIPMENT, SGLT TT&C ADPE SUBSYSTEM	0.9999	N/A	0.9996

13.4.3 Operational Availability Computation

The computation of operational availability for WSC shall use the following formula:

$$A_O = \frac{\text{Time Service is Available}}{\text{Time Service is Available} + \text{Time Service is Not Available}}$$

The time service is available is measured over a contiguous 10,000 hour interval except that any loss of availability due to loss of facility services such as power or air conditioning, or loss of system capability resulting from unusual weather conditions, such as icing or severe rain storms, shall not be counted. The time service is not available shall include all times service is not available due to corrective maintenance downtime, administrative downtime, logistics supply downtime, and preventive maintenance downtime.

Section 14. Equipment Design and Construction

This section specifies the general electrical and mechanical design and construction requirements for the chassis, subsystems and racks comprised by the WSC.

14.1 General Requirements for Electronic Equipment

14.1.1 Equipment of New Design or Significantly Modified Design

All chassis, subsystems and systems of new design or significantly modified design shall be designed and constructed to comply with the requirements of STDN-SPEC-4, GSFC General Requirements for STDN Electronic Equipment with the following additional considerations:

a. Section 3.16 of STDN-SPEC-4, Maintainability, shall not apply. Instead, the Maintainability provisions of this specification shall be used.

b. Programmable semiconductor devices in any chassis shall be handled in accordance with the provisions of STDN-SPEC-3, Specification Programming and Handling Semiconductor Devices, and with the requirements of Data Item SO-05 STGT Firmware Support Manual, i.e., the tailored version of DI-MCCR-80022.

c. The contractor shall use connectors, cable, wires and other materials listed in STDN-SPEC-8, GSFC Specification for Electronic Equipment Installation Materials in the design and construction of WSC equipments. Use of materials other than those in STDN-SPEC-8 will require a waiver from the contracting officer.

14.1.2 Commercially Available Equipment

Existing or commercially available equipment shall satisfy the requirements of S-323-P-5A, Quality Assurance Requirements for Standard Industrial Equipment. The requirements included in S-323-P-5A shall be invoked on any subcontracts where commercially available equipment is procured by the subcontractor.

14.2 Electronic Equipment Racks

WSC equipment shall be mounted in electronic equipment racks which conform to STDN No. 270.5, GSFC Specification Electronic Equipment Racks. As a minimum, the following options to STDN No. 270.5 shall be included in the racks supplied:

a. Tapped panel mounting holes (Section 6.7 of STDN No. 270.5).

b. Electromagnetic compatibility (EMC) option (Section 6.9 of STDN No. 270.5). If required to meet the Electromagnetic Interference (EMI) requirements for the WSC, the EMC option shall be used where necessary. EMI racks shall be used for all equipments which process RED data.

c. Rack Widths (Section 6.13 of STDN No. 270.5). If racks in excess of the standard 19-inch panel width are required for mounting some equipments, this section shall apply.

d. Equipment consoles shall comply with the requirements of Section 6.17 of STDN No. 270.5. If size constraints of standard equipment require console construction that differs from the requirements of Section 6.17, or if the contractor desires to use consoles which are not in compliance with Section 6.17 of STDN No. 270.5, then a waiver will be required from the contracting officer.

14.3 Rack Mounting of ADPE

If it is not practical to repackage computer mainframes and peripherals, these items may use the computer manufacturer's standard racks, provided that they a) are designed to utilize ambient air, or b) can be configured to assure adequate equipment cooling via the WSC underfloor cooling system through the use of ducting.

14.4 Cabling and Connectors

Each rack shall be provided with an input/output (bulkhead) panel in accordance with Section 3.7a of STDN-SPEC-4. All cabling between contractor-delivered systems and subsystems and existing Government site equipment shall be provided by the contractor. All mating connectors shall be supplied by the contractor. The contractor shall provide all cabling required to configure the systems and subsystems for checkout and in-plant testing. This includes cabling required at the WSC site for all special test equipments and cabling for RED/BLACK information separation and isolation as specified in STDN-SPEC-4, Section 3.5.

14.5 Electromagnetic Interference (EMI)

All WSC equipment shall comply with the requirements contained in the following parts of MIL-STD-461, Electromagnetic Emission and Susceptibility Requirements for the Control of Electromagnetic Interference:

a. Part 1, General Requirements.

b. Part 3, for Class A2b ground support equipment, including requirements CS01.

In addition, the operational convenience of the WSC shall be maintained while satisfying the above requirements by the exclusion of rack front doors, hidden controls and displays, and by the location of equipment in the system racks. EMI racks and filtering shall be used as required. All controls and displays shall be fully accessible during setup and normal operation of the WSC. NACSIM 5203, National COMSEC Information Manual, is applicable where required.

Section 15. Installation Requirements

This section specifies the requirements for the installation of the WSC equipment. The approach, methods, equipment, and schedules for planning, managing, performing, and monitoring the installation of the WSC equipment are specified.

15.1 Installation

15.1.1 Site Planning

GSFC-provided site documents shall be used in planning the configuration and layout of equipment. A set of site plans shall be developed by the contractor that provides an efficient layout of all equipments. The plan shall provide drawings that specify the type, size, length, number, and layout of conductors for all signal and power cabling necessary for equipment operation. The site plan shall contain, for each major component: the BTUs emitted; the electrical power requirements by KVA, Hertz, Volts and power conditioning; and the floor space area occupied by each rack or multiple rack system. The equipment installation will be documented in accordance with the requirements of STDN-SPEC-10, Specification Station Handbook Documentation.

15.1.2 Site Preparation

The following services required to prepare the sites for the installation and testing of the WSC Ground Terminal systems shall be provided. The contractor shall provide all power and signal cables necessary for equipment operation. Cable installation shall be in accordance with the requirements of STDN-SPEC-6, GSFC Specification Installation Requirements for STDN Equipment. All cable fabrication shall be in accordance with the requirements of STDN-SPEC-4, Section 3.7.

15.1.3 Equipment Installations

Equipment installations shall be in accordance with STDN-SPEC-6, Installation Requirements for STDN Equipment. This includes preparation of floor panels in accordance with the requirements of STDN-SPEC-6.

15.1.4 Grounding

The safety, lightning and earth ground systems will be provided as part of the ground terminal facilities. The WSC equipment contractor shall supply and install the signal ground radial systems in accordance with the requirements of STDN No. 270.7, GSFC Specification Grounding System Requirements, paragraph 3.7. Elements of the safety ground systems (i.e., cable trays and conduit for signal, power, or control cables) shall be installed and connected in accordance with the requirements of STDN No. 270.7, paragraph 3.6.

15.1.5 Post-Shipment Installation and Test

The GRGT shall be verified in accordance with the GRGT Performance Verification Plan (532-PVP-GRGT).

Section 16. Documentation

All documentation to be developed in accordance with this Specification is specified in the Contract Data Requirement List (CDRL) which contains a Data Requirements List (DRL) and Data Item Descriptions (DIDs). The DRL lists each document to be provided and the DIDs describe the purpose, content and format of each document. All documents shall be numbered in accordance with the numbering system specified in STDN 102, STDN Documentation System.

Technical manuals shall be prepared in accordance with STDN-SPEC-1,Specification Preparation and Acceptance of Technical Manuals. Operations documents shall be prepared in accordance with STDN 102.1, Standard for Preparation of STDN Operations Documents. Interface control documents shall be prepared in accordance with STDN 102.8, Handbook for Interface Control Documents for Non-Project Related Ground Facilities.

16.1 Documentation Automation

All documents prepared for the WSC shall be compatible with the requirements of the NASA Integrated Automated Documentation Program.

16.2 Drawings

Drawings shall be prepared in accordance with STDN-SPEC-9, Specification Drawing System, and S-572-P-3B, Engineering Drawing Standards and Specifications. All WSC drawings shall represent the WSC as built and installed.

Section 17. Training

This section specifies the objectives and approach for the training of WSC personnel. Training shall adhere to the following guidelines:

a. Training policies, plans and procedures shall provide for orderly phased transition from initial operating capability through full operating capability into sustained operation and maintenance.

b. The impact of training resource requirements shall be included within each proposed design and its corresponding staffing profile.

17.1 Objectives and Approach

Training shall prepare operations and maintenance personnel, including both Government and contractor employees, to operate, maintain, and support the WSC and the TDRS. Operations personnel shall be trained to perform TOCC functions in accordance with WSC Local Operations Procedures (LOPs) and the Operations Interface Procedures between the Goddard Space Flight Center Network Control Center and the Second TDRSS Ground Terminal, 534-OIP-NCC/STGT. Maintenance technicians shall be trained to maintain WSC subsystems in order to meet the maintainability requirements. This includes training in the maintenance of software and firmware using the facilities provided in the SMTF. The overall training objective is to provide certified WSC operations and maintenance personnel.

The maximum amount of training shall be performed at the WSC. Training shall be conducted at other sites, such as vendor facilities, when it is cost effective to the Government, e.g., to take advantage of existing courses and training facilities. The course material shall be modularized, individualized, and shall use multimedia learning resources including manuals, study guides, workbooks and audiovisual materials as appropriate.

The initial training program, at the contractor's facility, will concentrate on maintenance operations. Students for the further training programs shall include NASA instructors, cognizant NASA technical personnel, NASA system engineers and WSC Operations and Maintenance (O&M) contractor personnel. The major portion of this training will be conducted during the installation phase of the WSC.

17.2 Training Program

The training program shall be accomplished in accordance with the provisions of this Specification and GA-GEM-1331331, Contractor-Administered Training Course.

The training program shall include:

a. Definition of the qualifications required by operations and maintenance personnel to meet position description skill requirements.

b. A training plan to define the phasing, methods and techniques for achieving the requisite skill levels, using curricula and course materials for skill/qualification areas within each position description.

c. Training devices and equipment.

d. Administrative support to implement the training program.

17.2.1 Skill Area Requirements

17.2.1.1 Operator Training

Operator training shall cover a TDRSS network overview, the WSC concept of operations including key design features, training of TDRS controllers, and detailed WSC operational procedures.

17.2.1.2 Maintenance Technician Training

Maintenance technician training for both hardware and software shall cover:

a. TDRSS systems theory.

b. WSC systems familiarization.

c. WSC maintenance concept.

d. Diagnostics and troubleshooting.

e. Detailed repair procedures and techniques including the use of available tools and repair equipments.

f. WSC software maintenance concepts.

Software-unique maintenance technician training shall include debugging techniques and high order language (HOL) use. This training shall cover maintenance of both operational and support software. Hardware-unique maintenance technician training shall include certification in soldering, wirewrap, and other disciplines addressed by the NASA handbooks cited in this Specification.

17.3 Training Devices and Equipment

The primary training device provided as an integral part of the WSC is the Software Maintenance and Training Facility (SMTF) for the training of software maintenance personnel and operations personnel. All other training devices and equipment, as well as the use of the SMTF for maintenance training and the use of the TDRS simulator for TDRS controller training, shall be specified in the Training Plan. To the maximum extent practicable, hardware maintenance training should take advantage of equipments, and simulation/automation capabilities provided for day-to-day WSC operations.

17.4 Training Support

Administrative support for training shall provide for the testing and certification of students. A training record system shall provide documentation of courses taken, record of completion, and certification and/or qualifications attained. Training records shall be maintained separate and distinct from routine administrative personnel files. The records shall note when major changes in course content require retraining and recertification.

Section 18. Maintenance Requirements

18.1 Overview

This section contains the detailed maintenance requirements for the WSC. The objective of the maintenance functions is to support achievement of the required inherent availability. General requirements which directly affect the performance of maintenance functions include ease of access to equipment for tests and maintenance, the use of built-in test and diagnostic features, and the capability to perform maintenance without interference with on-going operations.

18.2 Detailed Maintenance Requirements

The WSC shall have the resources (including a Maintenance Test Group, Hardware Maintenance Depot at Danzante, and SMTF at Danzante), personnel, and logistics support required to (1) maintain, modify, and repair the system hardware, and (2) maintain, modify and enhance the system software. Hardware maintenance shall be performed under a formally established system maintenance program which will include both Preventive Maintenance and Corrective Maintenance procedures. The contractor will develop these procedures using STDN 402, STDN System Maintenance Program as a guideline, but will include any state-of-the-art techniques that are developed for the WSC.

18.2.1 Hardware Maintenance

Hardware maintenance shall be conducted at two levels. First level maintenance shall be conducted to support the inherent availability requirements specified in Section 13.3 by replacement of line replaceable units (LRUs) and line replaceable items within LRUs. Second level maintenance shall consist of the repair, adjustment, and testing of LRUs removed from service during first level maintenance actions. Attention shall be given to GSFC specifications so as to provide for chassis slides, cable service loops, and cable retractors to aid maintenance.

18.2.1.1 Identification of LRU

LRUs shall include rack-mounted equipment drawers and panels and other assemblies which can be removed by unplugging power and signal connectors without physically disturbing other LRUs. Other line replaceable items include printed circuit cards and other plug-in components within an LRU.

18.2.1.2 First Level Maintenance

First level maintenance shall be performed by the Maintenance Test Group (MTG) and is described in Section 12 of this Specification.

18.2.1.3 Second Level Maintenance

Second level maintenance shall be conducted to restore malfunctioning equipment to serviceable condition when the failure requires unit/element disassembly. Second level maintenance shall also be required when the fault isolation capabilities of first level maintenance are incapable of localizing a failure to a line replaceable item within an LRU. Second level maintenance shall be performed in or under the management control of the Hardware Maintenance Depot. Second level maintenance actions shall include:

a. Localization of a failure to the piece-part or equipment component level, as appropriate.

b. Disassembly and removal of the failed piece-part or equipment component.

c. Replacement of failed element and reassembly.

d. Bench testing to ensure performance to the specified level.

18.2.1.4 Hardware Maintenance Depot

The Hardware Maintenance Depot shall reside at the Danzante Ground Terminal. The Depot shall be responsible for the second level repair and restoration to specified level of performance of all hardware for the WSC determined to be repairable. The Hardware Maintenance Depot shall contain the special and general test equipment, fixtures, jigs, and tools required for performing its assigned functions. The Depot shall contain an Electrostatic Discharge (ESD) - controlled workstation for servicing sensitive circuits.

18.2.2 Software Maintenance

Software maintenance, including debugging, modification, and enhancement of system software packages, shall be performed in the SMTF. The requirements of the SMTF are specified in Section 11.

Section 19. Spares Provisioning

19.1 Overview

Requirements for spares provisioning are presented for each of the following time periods:

a. Prior to Provisional Acceptance Testing.

b. Between Provisional Acceptance Testing and Final Acceptance Testing.

c. After Final Acceptance Testing.

Spares provisioning for the WSC shall be determined and provided by the development contractor through Provisional Acceptance Testing. During this period of time, the development contractor shall support a series of provisioning conferences with the WSC O&M contractor and the Logistics Support Depot contractor who, under the direction of NASA, will develop the spares provisioning program in accordance with STDN 507, Network Logistics Manual, utilizing the NASA Logistics Support Depot and S-530-1, Specification for Ground System Spare Parts Program.

The development contractor shall deliver all support spares remaining after Provisional Acceptance Testing to the WSC site. Between Provisional and Final Acceptance Testing, the WSC O&M contractor and Logistics Support Depot contractor, under the direction of NASA, will implement the spares provisioning program, replenish the spares to the proper levels, and provide follow-on spares to support the WSC.

After Final Acceptance Testing of the WSC, the WSC O&M contractor will maintain the spares support program primarily through requisitioning from the Logistics Support Depot (LSD). Spare parts provisioning procedures will be coordinated with the Logistics Support Depot contractor (currently responsible for Network provisioning) and the WSC O&M contractor, under the overall direction of NASA. Follow-on provisioning spares, after Final Acceptance Testing by NASA, will be arranged by the Logistics Support Depot contractor. The development contractor shall provide the required information to develop, implement and maintain operation of this spares provisioning program consistent with the WSC requirements contained in this Specification and the spares provisioning requirements identified in the following sections.

19.2 Provisioning Conferences

The development contractor shall support the provisioning conference in the Critical Design Review timeframe as well as follow-on provisioning conferences. During these coordination sessions and conferences NASA, supported by the WSC O&M contractor and the Logistics Support Depot contractor, will make purchase and stocking decisions based upon the availability and maintainability requirements and demand history/logistics support analysis results.

19.3 Initial Spares Provisioning

The development contractor shall determine the WSC initial spares provisioning in accordance with S-530-1, GSFC Specification for Ground System Spare Parts Program, except:

a. A spares provisioning formula will not be provided by NASA and the formula in S-530-1 is not required to be used.

b. The proposed spare parts and quantities shall be based upon satisfying the availability and maintainability requirements of this Specification.

19.4 Replenishment Spares

Replenishment spare parts for the WSC will be procured by NASA supported by the WSC O&M and Logistics Support Depot contractors. The Development contractor shall provide technical data to allow procurement of spare parts directly from the actual manufacturer of the equipment.

19.4.1 Spare Parts Availability

The development contractor shall ensure that either spare parts are available for a period of 10 years after Final Acceptance Testing or that NASA be provided advance notice of intent to discontinue manufacture of parts/components by all levels of subcontractors.

Section 20. Security

The implementation of the WSC systems and subsystems shall employ security measures and techniques as required based upon the security classification of the information received, stored, processed or transmitted by the WSC as set forth in the SN SCG, Space Network Security Classification Guide. This shall include all applicable security disciplines (e.g., computer security, emissions security, communications security and other security disciplines). The security measures and techniques implemented shall follow the security responsibilities, policies, and procedures guidance as identified in the NASA Security Handbook, NHB 1620.3A, the NASA Automated Information Security Handbook, NHB 2410.9A, and the Goddard Space Flight Center Security Manual, GHB 1600.1A. This includes, but is not limited to, color change software procedures for all computers which handle classified data, and emission control procedures such as proper grounding design, filtering, separation and isolation. Figure 20-1 illustrates the application of security considerations to WSC systems and subsystems.

The ADPE systems comprised in the WSC are to be considered a Division C, Class C2 system under "Department of Defense Trusted Computer System Evaluation Criteria," CSC-STD-001-83. This security standard requires controlled access protection which includes:

a. Discretionary Access Control.

b. Identification and Authentication (passwords).

c. Audit trails.

20.1 System High Security Mode

The WSC ADP systems shall be designed to operate in the system high security mode. A system high security mode is a mode of operation requiring that all personnel with access to the ADPE have a security clearance, but not a need-to-know for all the material then contained in the system. An ADPE system is operating in the system high security mode when the central computer facility and all of its connected peripheral devices are protected according to the requirement for the highest classification of material contained in the system. In this mode, the ADPE system design and operation must accordingly provide for some internal control of concurrently available classified material in the system on the basis of need-to-know.

20.2 Color Change and Declassification Procedures

The contractor shall provide procedures and software as necessary for color change and declassification of all ADPE systems including the main memory and secondary storage media, such as buffer areas and peripheral controllers which either process or store or could potentially process or store classified data. The color change, declassification and verification of each ADPE system shall be accomplished in 30 hours or less and shall satisfy the following requirements.

SYSTEM OR SUBSYSTEM / SECURITY CONSIDERATION	USS	PMMS	TT&C	CDCN	TOCC	DIS	CTFS	SMTF
EMISSION CONTROL								
- GROUNDING	√	√	√	√	√	√	√	√
- FILTERING	√	√	√	√	√	√	√	√
- ISOLATION	√	√	√	√	√	√	√	√
ADP SECURITY								
- ACCESS CONTROL	√		√	√	√	√		√
- PARTITIONING	√		√	√	√	√		√
- LABELING	√		√	√	√	√		√
- COLOR CHANGE	√		√	√	√	√		√
- AUDIT TRAIL	√		√	√	√	√		√
- PASSWORDS	√		√	√	√	√		√
COMMUNICATIONS SECURITY								
- ENCRYPTION			√			√		

Figure 20-1. Security Considerations

a. Color change.

1. ADP systems operating in and remaining within the secure environment shall ensure that all addressable locations in internal memory used for classified data are overwritten at least one time with an unclassified bit pattern prior to being released for use by an uncleared customer. The overwrite shall be verifiable and procedures for the overwrite and verification shall be developed, implemented and placed under configuration management.

2. All storage devices used to store classified data may be color-changed by overwriting all storage locations once with zeros. The overwrite shall be verifiable and procedures for the overwrite and verification shall be developed, implemented and placed under configuration management.

b. Declassification.

1. All magnetic ferrite and nonvolatile semiconductor memory removed from a controlled environment shall be declassified by setting each addressable memory alternatively to all ones and all zeros for 100 cycles until the state is changed at least 99 times. The declassification shall be verifiable and procedures for the declassification and verification shall be developed, implemented and placed under configuration management.

2. Volatile semiconductor memory shall be declassified by setting "0" or "1" at least once in all memory locations or by removal of power from the system (example: a power on-off reset action).

3. All storage devices used to store classified data may be declassified by overwriting all storage locations three times, once with all zeros, once with all ones, and once with an unclassified bit pattern. The overwrite shall be verifiable and procedures for the overwrite and verification shall be developed, implemented and placed under configuration management.

20.3 Discretionary Access Control

The ADP system shall be designed to define and control access between named customers and named objects (e.g., files and programs) in the system. The enforcement mechanism (e.g., self/group/public controls, access control lists) shall allow customers to specify and control sharing of those objects by named individuals, or defined groups of individuals, or by both. The discretionary access control mechanism shall, either by explicit customer action or by default, provide that objects are protected from unauthorized access. These access controls shall be capable of including or excluding access to the granularity of a single customer. Access permission to an object by customers not already possessing access permission shall only be assigned by authorized customers.

20.4 Identification and Authentication

The ADP system shall require customers to identify themselves to it before beginning to perform any other action. Furthermore, the ADP system shall use a protected mechanism (e.g., passwords) to authenticate the customer's identity. The ADP system shall protect authentication data so that it cannot be accessed by any unauthorized customer. The ADP system shall be able to enforce individual accountability by providing the capability to uniquely identify each individual ADP system customer. The ADP system shall also provide the capability of associating this identity with all auditable actions taken by that individual.

20.5 Audit

The ADP system shall be able to create, maintain, and protect from modification or unauthorized access or destruction an audit trail of accesses to the objects it protects. The audit data shall be protected by the ADP system so that read access to it is limited to those who are authorized to audit data. The ADP system shall be able to record the following types of events: use of identification and authentication mechanisms, introduction of objects into a customer's address space (e.g., file open, program initiation) deletion of objects, and actions taken by computer operators, system administrators and/or system security officers. For each recorded event, the audit record shall identify: date and time of the event, customer, type of event, and success or failure of the event. For identification/authentication events the origin of request (e.g., terminal ID) shall be included in the audit record. For events that introduce objects into a customer's address space and for the object deletion events the audit records shall include the name of the object. The ADP system administrator shall be able to selectively audit the actions of any one or more customers based on individual identity.

20.6 Removable Magnetic Media Labeling

Magnetic media internal volume/file labels shall be marked with the highest classification of data contained within the volume/file. The operating system must be capable of reading internal classification labels and provide the capability to identify and reject media whose classification level is not compatible with the current authorized system classification level. Internal classification labels are especially essential for removable magnetic media which are processed on systems which are color-changed to support processing periods at different classification levels.

20.7 Software Protection

Software used to process classified information shall be divided into four categories:

a. Existing Software. Existing software programs may be used to process classified information, provided that the software is safeguarded commensurate with the highest level of classified information processed.

b. Commercially Available Software. Commercially available "off the shelf" software used to process classified information shall be protected only after introduction into classified processing or when identified for classified use.

c. Customized Applications Software. Customized applications software specifically designed for classified information processing shall be developed in a protected area by cleared personnel and then safeguarded commensurate with the highest level of classified information processed.

d. Locally Modified Software. Software specifically modified locally to enhance classified information processing shall be developed or modified in a protected area by cleared personnel and then safeguarded commensurate with the highest level of classified information processed.

Appendix A.
Ephemeris Computations for Customer Support in the WSC

Appendix A. Ephemeris Computations for Customer Support in the WSC

A.1 Introduction

To provide customer services, the Ground Terminal must command the Tracking and Data Relay Satellite (TDRS) to point its radio frequency (RF) beam at the customer spacecraft, adjust the forward link frequency during periods of Doppler compensation, adjust the demodulator frequency for acquisition and tracking of the return link signal, and estimate the two-way range for acquiring the PN code. These activities require computation of the position and velocity state vector of the customer spacecraft, the TDRS, and the Ground Terminal. The purpose of this appendix is to specify the algorithms to be used at the WSC for these computations.

A.1.1 State Vector Types

The Network Control Center (NCC) at the Goddard Space Flight Center (GSFC) shall provide customer spacecraft state vectors to each Ground Terminal These state vectors shall arrive as improved interrange vectors (IIRVs) contained within operations messages (OPMs) (530-ICD-NCC-FDF/WSC). The NCC shall provide the TDRS state vectors in this form for routine support. TDRS state vectors shall be computed at each Ground Terminal from tracking data for backup. Ground Terminal vectors will be provided by the NCC.

The state vector OPMs shall be identified by a message class code (MCC) of 10 or 15. State vector processing shall be independent of the MCC used. Seven different vector types shall be acceptable. A type 1 vector shall be used to provide the state vector for a spacecraft in free flight. All state vectors for the TDRS shall be type 1. A type 8 vector shall be used to provide the position but not the velocity of a customer located on the Earth's surface. Among these customers, a special class, known as permanent Earth stations, shall be established. Permanent Earth stations such as the Bilateration Ranging Transponder System (BRTS), shall only use type 8 vectors. Other customers, such as the Space Shuttle Orbiter (SSO), shall use type 8 vectors while on the launch pad, landing strip, or other Earth fixed location, and shall use type 8 vectors with velocity components for special in-flight trajectories. Types 4, 5, 6, and 7 shall be used to provide an ephemeris of state vectors for a spacecraft undergoing thrust accelerations, such as launch, orbit change maneuvering, or reentry. A type 2 vector shall be used for the free-flight period immediately following a thrust acceleration. Any other vector types received will be due to errors and shall be rejected by the Ground Terminal.

A.1.2 Delta-T Messages

The NCC shall transmit Delta-T OPMs to the each Ground Terminal.. The purpose of the Delta-T OPM is to adjust the customer spacecraft trajectory to account for delays in mission (e.g., Shuttle, etc.) launches.

A.1.3 Vector Processing Ground Rules

The Interface Control Document (ICD) between the NCC/FDF and the WSC, 530-ICD-NCC-FDF/WSC shall control the exchange and use of customer and TDRS state vectors. Implementation of the vector processing algorithms defined here shall be consistent with 530-ICD-NCC-FDF/WSC. In particular, implementation shall follow the vector processing ground rules in the 530-ICD-NCC-FDF/WSC. These ground rules are included for reference only in Section A.4.

A.2 Incorporating Vectors and Delta-T Messages into a Composite Customer Ephemeris

TDRSS customers may be supported during the course of time by a combination of vectors of all types. The purpose of this section is to define an algorithm that shall be used at the WSC to incorporate the various vector types and any Delta-T messages into a composite customer ephemeris.

A.2.1 IIRV Message Verification

Upon receipt of an IIRV, the Ground Terminal shall verify that the message contents are appropriate for use in the composite customer ephemeris. The IIRV shall contain the epoch time of the state vector (Section A.3.1) and the position and velocity components (Section A.3.2). Checksums shall be provided for the time, position, and velocity. The Ground Terminal shall verify the checksums. The OPM shall be rejected if the checksums are inconsistent with the message contents.

The NCC will generally provide state vectors with epoch times close to current time or in the future. A state vector shall be rejected by the Ground Terminal if the epoch time is earlier than receipt time by more than:

12 hours for Type 1 or 2

24 hours for Type 8.

Maneuver vector types 4, 5, 6, and 7 shall be accepted with any epoch times but shall not be used to update the customer composite ephemeris if the epoch time is earlier than 6 minutes prior to receipt time.

Because free-flight vectors will be propagated by the Ground Terminal, it is necessary to ensure that propagation is physically meaningful. The position vector magnitude squared (r^2) shall be computed and the vector shall be rejected if r^2 is less than $(6356 \text{ kilometers})^2 = 40398736 \text{ kilometers}^2$.

Vector types 2, 5, 6, and 7 shall be used only with maneuver sequences. Any vector with these types that is not part of a maneuver sequence shall be rejected.

Permanent Earth stations shall only be supported by stationary vectors from the NCC. Any state vector for a permanent Earth station that does not have a vector type 8 shall be rejected.

The TDRS spacecraft shall only be supported by free-flight vectors from the NCC. Any state vector for a TDRS that does not have vector type 1 shall be rejected.

In addition to the verification tests applied to individual IIRVs, maneuver sequence contents shall also be verified. A maneuver sequence shall be defined as beginning with the arrival of a type 4 vector and ending with the arrival of a type 5 vector. A maneuver sequence shall be rejected for any of the following reasons:

a. The vectors in a sequence shall arrive in chronological order. If any vector arrives out of order, the entire sequence shall be rejected.

b. If any of the IIRV tests results in rejection of an individual vector in the sequence, the entire sequence shall be rejected.

c. The intervals between successive vectors (except the type 2 or 8 vector) shall be greater than or equal to 0.5 second and less than or equal to 6 minutes. If any interval is outside these limits, the entire sequence shall be rejected.

d. The ordering of vector types shall follow the format specified in the 530-ICD-NCC-FDF/WSC ground rules (see Section A.4 and 530-ICD-NCC-FDF/WSC). Any sequence not conforming to the 530-ICD-NCC-FDF/WSC format shall be rejected.

e. Maneuver vectors must arrive prior to their epoch times so that the Ground Terminals can implement them. If a maneuver sequence transmission has begun and the Ground Terminal is in the real-time mode for that customer and the current time passes the epoch time of the last vector received, the Ground Terminal shall reject the sequence.

If a sequence is rejected when the Ground Terminal is in the nominal mode (Section A.2.2) for that customer, all vectors in the sequence shall be purged from the Ground Terminal and none shall be used for customer support. If a sequence is rejected when a Ground Terminal is in the real-time mode for that customer and the type 2(8) vector has not yet been received, the Ground Terminal shall generate a type 2(8) vector with the identical components and epoch time of the last correctly received vector.

A.2.2 Nominal and Real-Time Modes

The standard operating procedures of the Ground Terminal for receipt and processing of state vectors shall be referred to as the nominal mode. Special conditions described in this section shall result in rapid response procedures that shall be referred to as the real-time mode.

After the contents of each IIRV are verified, the Ground Terminal shall determine if the real-time mode is required to support the customer.

Customer spacecraft data generally shall arrive from the NCC well before the data are needed to support customer service. No earlier than six minutes prior to the start of service, all necessary customer ephemeris data shall be downloaded into the customer services support (USS) automatic data processing equipment (ADPE) subsystem and the tracking, telemetry, and command (TT&C) ADPE subsystem. For permanent Earth stations, the ephemeris shall consist of the single stationary vector stored by the Executive ADPE Subsystem with an assigned epoch time (approximately) one minute prior to the time of downloading the vector. Due to real-time

modifications in mission planning or the availability of updated trajectory data, the NCC shall from time to time require the Ground Terminal to update the customer ephemeris following down loading of the customer ephemeris prior to start of service or during an ongoing service.

The Ground Terminal shall enter the real-time mode for any customer upon receipt of any of the following messages less than 6 minutes prior to the start of service or during service:

a. Delta-T message.

b. Type 1 or 8 vector with an epoch prior to the end of service.

c. Type 2, 4, 5, 6, or 7 vector as part of a maneuver sequence and with an epoch time in the future and prior to the end of service.

In the real-time mode, the Ground Terminal shall immediately download all Delta-T messages and type 1, 2 or 8 state vectors upon completion of message verification. Maneuver vectors with epoch times in the past, and maneuver vectors following the type 2(8) vector shall not be downloaded. The Ground Terminal shall begin downloading maneuver vectors only after there are two verified maneuver vectors available with epoch times in the future.

The Ground Terminal shall remain in the real-time mode until notified by the USS and TT&C ADPE subsystems that ephemeris processing is complete. When receiving maneuver sequences in the real-time mode, the Ground Terminal shall remain in the real-time mode until either the entire sequence has been received or until the sequence is rejected.

TDRS state vectors shall not be used to initiate real-time mode support.

A.2.3 Updating the Composite Customer Ephemeris in the Executive ADPE Subsystem

The Executive ADPE Subsystem shall update the composite customer ephemeris following verification of IIRV contents in the nominal mode or data downloading in the real-time mode.

In response to receipt of a Delta-T message, the Executive ADPE Subsystem shall add the Delta-T adjustment amount to the epoch times of all vectors in the composite customer ephemeris. The Delta-T information shall no longer be needed following the adjustment.

In response to receipt of a state vector that is part of a maneuver sequence, the composite customer ephemeris shall be updated following the receipt of the type 5 vector. All maneuver vectors shall be stored in a buffer until the type 5 vector arrives to terminate the sequence. If any vector for any customer or any Delta-T message for any customer shall arrive after the arrival of the type 4 vector but before the arrival of the type 5 vector, the Executive ADPE Subsystem shall purge the maneuver vectors from the buffer and notify the NCC that the maneuver sequence has been rejected. If the customer involved has placed the Ground Terminal in the real-time mode, the sequence shall be terminated as outlined in Section A.2.1.

In response to receipt of a type 1, 5, or 8 state vector, the Executive ADPE Subsystem shall update the composite customer ephemeris. If the epoch time of the new vector (or sequence) is later than the epoch time of the last vector currently in the ephemeris, the new vector (or sequence) shall be added to the end of the ephemeris. If the new vector (or sequence) is earlier

than or at the same time as the last vector currently in the ephemeris, a new ephemeris shall be generated consisting of all vectors currently in the ephemeris with epoch times earlier than the new vector (or sequence) followed by the new vector (or sequence). Those vectors in the current ephemeris with epoch times later than or equal to the epoch time of the new vector (or sequence) shall not be retained in the new updated ephemeris. This algorithm may result in the elimination of part of a maneuver sequence that was in the composite customer ephemeris prior to updating.

The customer ephemeris maintained for a permanent Earth station by the Executive ADPE Subsystem, shall consist of a single stationary vector. In response to receipt of a type 8 vector for a permanent Earth station, the Executive ADPE Subsystem shall replace the existing stationary vector with the newly received vector. The vector epoch time will not affect the updating process.

The NCC shall provide TDRS state vectors for each Ground Terminal-supported TDRS. These vectors shall have epochs at intervals of no more than 1 hour. Vectors at smaller intervals shall be provided by the NCC as required to maintain the TDRS ephemeris following a station-keeping maneuver, updated orbit determination, or other event. Each Ground Terminal shall maintain a composite TDRS ephemeris for each TDRS in the same manner as the customer ephemerides shall be maintained.

A.2.4 Updating the Customer Ephemeris in the USS and TT&C ADPE Subsystems

No earlier than six minutes prior to start of customer support service, the Executive ADPE Subsystem shall notify the USS and TT&C ADPE subsystems of service start and stop times. The portion of the composite customer ephemeris required for the service period shall be downloaded as well. For permanent Earth stations, the ephemeris shall consist of the single stationary vector stored by the Executive ADPE Subsystem with an assigned epoch time (approximately) one minute prior to the time of downloading the vector. TDRS and Ground Terminal state vectors shall be provided to the USS and TT&C ADPE Subsystems on a periodic schedule or as required to update the ADPE subsystems following a TDRS maneuver, a computer restart, an updated determination of the TDRS orbit, or other appropriate event.

The state vectors shall be provided in chronological order and shall be labeled with an epoch time (Section A.3.1) and vector type (Section A.1.1) and shall include position components in units of kilometers and velocity components in units of kilometers/second. The vectors shall be referenced to a geocentric rotating (GCR) coordinate system (Section A.3.2 and 530-ICD-NCC-FDF/WSC) and shall be transformed into a geocentric inertial mean equator and equinox of date (MOD) system.

The transformed TDRS state vectors shall be stored in a TDRS ephemeris. The position and velocity of the TDRS at intervening times shall be determined by interpolating between ephemeris points (Section A.3.5).

The transformed Ground Terminal vectors shall be propagated forward (Section A.3.3) to a time past the end of scheduled service and the ephemeris shall be stored. The position and velocity of the Ground Terminal at intervening times shall be determined by interpolating between ephemeris points (Section A.3.5).

The transformed customer state vectors in the input ephemeris shall be used as a data source to generate a customer support ephemeris.

The position and velocity of the customer at times required for RF beam pointing, Doppler shift compensation, or range estimation shall be determined by interpolating between ephemeris points in the customer support ephemeris (Section A.3.5).

Stationary vectors in the input ephemeris shall be included in the support ephemeris and propagated forward (Section A.3.3) at 1-hour intervals. The propagation shall be terminated when the last propagated vector epoch time is after the end of service or after the epoch of the next vector in the input ephemeris. In the latter case, an additional propagated vector shall be generated (if required) with an epoch 1 minute prior to the epoch time of the next vector in the input ephemeris.

Maneuver vectors other than the type 2(8) vector shall be added to the support ephemeris without propagation of any kind. Type 8 vectors in a maneuver sequence shall be treated identically with all other stationary vectors. Type 2 vectors shall be treated identically with type 1 free-flight vectors.

Free-flight vectors (types 1 and 2) shall be used to support the customer for extended periods of time. This support shall be accomplished by propagating the vectors (Section A.3.4) forward in time to obtain an ephemeris at 2-minute intervals. Propagation shall continue until the end of service is passed or the epoch of the next vector in the customer input ephemeris is reached. If the time interval between the last propagated vector and the next vector in the ephemeris (if one exists) is less than 1 second, the last propagated vector shall be deleted from the ephemeris.

In the real-time mode, the customer support ephemeris shall be updated while service is in progress or about to commence. If the real-time mode is due to the receipt of a Delta-T message, the Delta-T rotation matrix shall be computed first (Section A.3.6). A new customer support ephemeris shall then be generated by multiplying each vector in the customer support ephemeris by the rotation matrix, adding the Delta-T amount to the epoch time, and appending the resulting vector to the new customer support ephemeris. Following addition of the last transformed vector to the new customer support ephemeris, customer support shall cease to use the original ephemeris and shall begin to use the updated ephemeris.

If the real-time mode is due to the receipt of a stationary or a free-flight vector, these vectors shall be propagated forward in the same manner as specified for the nominal mode. Propagation shall end when the end of service is reached. If the real-time mode is due to the receipt of a maneuver sequence, no propagation shall be required.

Following propagation (if required), an updated customer support ephemeris shall be generated. The updated ephemeris shall begin with all vectors in the original customer support ephemeris, plus an additional vector whose epoch is 2 milliseconds earlier than the new vector (or sequence). The additional vector shall be generated by propagating the last vector in the original ephemeris which has an epoch at least one second earlier than the new vector (or sequence). There shall be no interpolation between the original ephemeris and the new vector (or sequence), i.e., between the new vector (or sequence) and the original ephemeris vector with an epoch 2 milliseconds earlier. If the vectors in the original ephemeris whose epochs immediately precede the epoch of the new vector (or sequence) are part of a maneuver sequence, no propagation is required. These vectors shall be followed by the new vector and the propagated vectors (or

sequence). If the epoch of the new vector (or sequence) is in the past, there shall be no interpolation between the original and the new ephemerides, i.e., the new support ephemeris shall be used immediately upon generation.

If the updated customer support ephemeris has been generated by receipt of some, but not all, of the vectors in a maneuver sequence, it shall end prior to the end of service. As the additional maneuver vectors arrive they shall be added to the end of the customer support ephemeris without generating a new ephemeris.

A.3 Mathematical Specifications

This section specifies the mathematical computations required in Section A.2. These computations shall be performed with the precision adequate to accommodate the accuracy of the constants and variables provided.

A.3.1 Time

The time system used by NASA (GSFC FDF/552-89/001, Mathematical Theory of the Goddard Trajectory Determination System, A. C. Long, J. O. Cappellari, Jr., C. E. Velez, and A. J. Fuchs (editors), Section 3.4.7) in the IIRV is referred to as Greenwich mean time (GMT) and shall be based on the UTC system. The UTC system utilizes seconds of constant length and is appropriate to use as the independent time variable in the equations of motion. This statement is violated periodically (less than once per year on average) due to the application of leap seconds, which are used to maintain the correspondence between 00:00:00 UTC and solar midnight to less than approximately 0.5 second. Using UTC will result in a 1-second ephemeris discontinuity each time a leap second is applied. The discontinuity will be eliminated when the ephemeris is updated. Due to the small magnitude of the discontinuity, its infrequent occurrence, and short duration, no correction shall be made for leap seconds in the customer state ephemeris. If a leap second occurs during periods of large customer ephemeris uncertainty, the NCC shall ensure that the ephemeris is promptly updated by transmitting updated acquisition data.

GMT in the IIRV is expressed as a Gregorian date consisting of day of year, hour, minute, second, and fraction of second. Ephemeris computations require a decimal-based time representation. The generally adopted decimal-based time representation is the Julian date (JD). The JD system's origin is noon January 1, 4713 B.C.E., and is expressed in units of days. Thus, 12:00:00 January 1, 1990, is JD = 2447893.000000. Modern digital computer applications limit the number of significant digits available. Therefore, the modified Julian date (MJD) is used. MJD is given by

$$MJD = JD - 2430000.000000$$

Thus, 12:00:00 January 1, 1990, is MJD = 17893.000000.

The following algorithm shall be used to compute the MJD for each IIRV received from NASA:

a. If the day in the IIRV is less than 30 or greater than 335 (January or December), it shall be necessary to determine the year of the IIRV. If the day in the IIRV is less than 30 and the current month is December, then the year of the IIRV shall be the current year plus 1. If the day in the IIRV is greater than 335 and the current month is January, then

the year of the IIRV shall be the current year minus 1. In all other cases, the year of the IIRV shall be the current year.

b. The MJD for noon of January 0 of the year of the IIRV (January 0 of any year implies December 31 of the previous year) shall be obtained from a lookup table containing pre-computed values from Table A-1.

Table A-1. Modified Julian Dates

GREGORIAN DATE (NOON)	JULIAN DATE	MODIFIED JULIAN DATE
JANUARY 0, 1990	2447892	17892
JANUARY 0, 1991	2448257	18257
JANUARY 0, 1992	2448622	18622
JANUARY 0, 1993	2448988	18988
JANUARY 0, 1994	2449353	19353
JANUARY 0, 1995	2449718	19718
JANUARY 0, 1996	2450083	20083
JANUARY 0, 1997	2450449	20449
JANUARY 0, 1998	2450814	20814
JANUARY 0, 1999	2451179	21179
JANUARY 0, 2000	2451544	21544

NOTE

THIS TABLE SHALL BE EXTENDED BY THE WSC FOR SERVICE PERIODS PLANNED BEYOND DECEMBER 30, 2000. THIS EXTENSION SHALL NOT BE REQUIRED UNTIL DECEMBER 2000.

c. The fraction of the day shall be computed by

f_d - [hour x 3600.0 + minute x 60.0 + second]/86400.0.

d. The epoch time of the vector in the IIRV shall then be computed in MJD as

MJD = MJD (noon of January 0) + (day of year) + f_d - 0.5.

All references to vector epoch times or other times shall refer to MJD. Upon receipt and acceptance of a state vector (Section A.1.1), the MJD shall be computed and stored with the position, velocity, and type for each customer or TDRS. Position shall be stored in units of kilometers; velocity shall be stored in units of kilometers/second.

A.3.2 Coordinates and Transformations

The state vector elements of position and velocity in the IIRV are represented in a GCR Cartesian coordinate system (GSFC FDF/552-89/001, Section 3.2.2 and 530-ICD-NCC-FDF/WSC). All ephemeris-related computations must be performed in an inertial coordinate system. The system that shall be used for the customer ephemeris computations is the MOD inertial system (GSFC FDF/552-89/001, Section 3.3).

The x-axis in the MOD system is defined as the direction of the vernal equinox. Due to the precession and nutation of the Earth's spin axis, the vernal equinox moves about in inertial space and must be fixed at some time to obtain an inertial system. The vernal equinox shall be fixed

for ephemeris computations at midnight of each day. Although this shall result in a different coordinate system for each day, the motion is negligible on time scales relevant to WSC customer support ephemeris computations. The location of the vernal equinox shall be adjusted for the Earth's precession but not for its nutation, as implied by the term "mean."

The z-axis of the IIRV and the MOD systems shall be the Earth's spin axis. The y-axis completes the right-handed orthogonal coordinate system. Transforming from the GCR system to the MOD system shall be accomplished by a rotation of the position and velocity vectors about the z-axis. The velocity vector in addition shall be adjusted for the time dependence of the rotation matrix. The rotation angle is known as the Greenwich hour angle, a_G. a_G shall be computed in two steps. In the first step, a_{G0}, the Greenwich hour angle at midnight (GSFC FDF/552-89/001, Section 3.4.3), shall be computed from

$$a_{G0} = c_0 + c_1 T_u + c_2 T_u^2$$

where $c_0 = 1.7533686$
$c_1 = 628.3319707$
$c_2 = 6.77E\text{-}06$
$T_u = (JD - 2451545.0)/36525 = (MJD - 21545.0)/36525$

c_0 is the value of a_{G0} at JD = 2451545.0 = 12:00:00 UT on January 1, 2000. c_1 includes the orbital rate of the Earth about the Sun and the precession of the Earth's spin axis. c_2 is an empirically determined correction factor.

The value of a_G shall then be determined from

$$a_G = a_{G0} + c_3 f_d$$

where $c_3 = 6.3003881$ radians/day

c_3 accounts for the rotation rate of the Earth corrected for orbital motion and precession of the spin axis.

The rotation matrix R_M is then computed

$$R_M = \begin{bmatrix} \cos(a_G) & -\sin(a_G) & 0 \\ \sin(a_G) & \cos(a_G) & 0 \\ 0 & 0 & 1 \end{bmatrix}$$

and the position vector in MOD coordinates $\vec{r}$ shall be computed from the position vector in GCR coordinates $\vec{r}_{GCR}$ by

$$\vec{r} = \begin{pmatrix} x \\ y \\ z \end{pmatrix} = R_M \vec{r}_{GCR}$$

$$\vec{r}_{GCR} = \begin{pmatrix} x_{GCR} \\ y_{GCR} \\ z_{GCR} \end{pmatrix}$$

using the usual rules of matrix multiplication. The velocity vector in MOD coordinates $\dot{\vec{r}}$ shall be computed from the velocity $\dot{\vec{r}}_{GCR}$ and position vectors by

$$\dot{\vec{r}} = R_M \dot{\vec{r}}_{GCR} + \dot{R}_M \vec{r}_{GCR}$$

where

$$\dot{R} = \omega_e \begin{bmatrix} -\sin(a_G) & -\cos(a_G) & 0 \\ \cos(a_G) & -\sin(a_G) & 0 \\ 0 & 0 & 0 \end{bmatrix}$$

and

$$\omega_e = c_3/(86400 \text{ seconds}) = 7.2921159 \times 10^{-5} \text{ radian/second}$$

For stationary customers,

$$\dot{\vec{r}}_{GCR} = \begin{bmatrix} 0 \\ 0 \\ 0 \end{bmatrix}$$

and therefore the MOD velocity vector shall be

$$\dot{\vec{r}} = \dot{R}_M \vec{r}_{GCR}$$

As defined in Reference 1, the origin of the inertial coordinate system used in the WSC shall be the center of mass of the Earth. Because the Earth is accelerating to maintain its orbital motion about the Sun, this coordinate system is not truly inertial. However, all artificial Earth satellites are also accelerating to maintain orbital motion about the Sun. Ignoring the influence of the Sun on both the Earth and the satellite results in a coordinate system that is a good approximation to a true inertial system. This approach is generally used in ephemeris computations for near-Earth satellites (GSFC FDF/552-89/001).

A.3.3 Stationary and Ground Terminal Vector Propagation

Stationary customers of the TDRSS shall be those that are stationary with respect to the Earth's surface. Because the Earth rotates approximately once per day about the z-axis, stationary customers shall not be stationary in an inertial reference frame. Therefore, a customer ephemeris shall be generated that includes the position and velocity of the customer.

The stationary customer state vector shall be propagated forward in h = 1 hour steps by successive applications of the rotation matrix:

$$\begin{bmatrix} \cos(h\omega_e) & -\sin(h\omega_e) & 0 \\ \sin(h\omega_e) & \cos(h\omega_e) & 0 \\ 0 & 0 & 1 \end{bmatrix}$$

where $\sin(h\omega_e) = 0.25951134$

$\cos(h\omega_e) = 0.96574006$

The rotation matrix shall be applied to both the position and velocity vectors. Vectors at other times shall be generated by interpolating between the vectors from one hour propagation. Ground Terminal vectors shall be propagated by the same procedures used for propagating the customer stationary vectors.

A.3.4 Free-Flight Vector Propagation

The propagation of a free-flight state vector from its assigned epoch time to some other time in the future shall be accomplished by integration of the equation of motion:

$$\ddot{\vec{r}} = \frac{-\mu\vec{r}}{r^3} + \vec{a}_{20}$$

where $\vec{r}$ = position vector of the spacecraft

r = magnitude of $\vec{r}$

$\ddot{\vec{r}}$ = acceleration vector of the spacecraft

$\vec{a}_{20}$ = perturbing acceleration due to the quadrupole gravitational harmonic portion of the gravitational field

μ = Earth's gravitational constant
= GM_e = 398600.4415 kilometers^3/second^2

G = universal gravitational constant

M_e = mass of the Earth

The contribution of the quadrupole gravitational harmonic to the gravitational potential is given by

$$V_{20} = C_{20}\frac{\mu R_e^2}{r^3}\left[P_{20}(\sin\varphi)\right]$$

where[1]

$C_{20} = -1.0826266 \times 10^{-3}$

R_e = Earth's equatorial radius
= 6378.1363 kilometers

[1]The values of C_{20}, R_e, and μ are a correlated set of parameters.

$P_{20}(\sin\varphi)$ = associated Legendre polynomial of degree 2 and
= and order 0
$= (3\sin^2\varphi - 1)/2$

φ = north latitude of the subspacecraft point

This addition to the potential results in a perturbing acceleration $\vec{a}_{20}$ given by

$$\vec{a}_{20} = \begin{pmatrix} \partial V_{20}/\partial x \\ \partial V_{20}/\partial y \\ \partial V_{20}/\partial z \end{pmatrix} = \left(\frac{3\mu R_e^2 C_{20}}{2r^5}\right) \begin{pmatrix} x(1-5z^2/r^2) \\ y(1-5z^2/r^2) \\ z(3-5z^2/r^2) \end{pmatrix}$$

where $\vec{r} = \begin{pmatrix} x \\ y \\ z \end{pmatrix}$

and $r = (x^2 + y^2 + z^2)^{1/2}$

A.3.4.1 Summary of the Free-Flight State Vector Propagation Algorithm

The following points summarize the free-flight state vector propagation algorithm:

a. The eighth-order, Runge-Kutta, single-step integrator shall be used to propagate the state forward by 6 minutes (three steps) from the initial epoch time.

b. The inverted sixth-order position corrector formula shall be used to compute the acceleration 2 minutes (one step) earlier than the initial time.

c. The sixth-order multistep predictor and corrector formulae shall be used to propagate the state forward 2 minutes (one step) at a time. For each step, the algorithm shall:

   1. Predict the position 2 minutes in the future.
   2. Compute the acceleration based on the predicted position.
   3. Compute the velocity using the velocity corrector formula.
   4. Correct the position using the position corrector formula.

A.3.4.2 Eighth-Order, Runge-Kutta, Single-Step Integrator

The eighth-order, Runge-Kutta, single-step integrator shall be used to integrate the state vector $\left(\vec{r}_s, \dot{\vec{r}}_s\right)$ from its initial epoch time t_s forward by a time step of h = 120 seconds (2 minutes). This integration shall be accomplished by computing the positions and velocities $\left(\vec{r}_i, \dot{\vec{r}}_i\right)$ at nine intermediate points. The formulae for computing the positions shall be

$\vec{r}_s, \dot{\vec{r}}_s$ = initial position and velocity

$$\vec{r}_1 = \vec{r}_s + h(4/27)\ \dot{\vec{r}}_s$$

$$\vec{r}_2 = \vec{r}_s + h\left(\dot{\vec{r}}_s + 3\dot{\vec{r}}_1\right)/18$$

$$\vec{r}_3 = \vec{r}_s + h\left(\dot{\vec{r}}_s + 3\dot{\vec{r}}_2\right)/12$$

$$\vec{r}_4 = \vec{r}_s + h\left(\dot{\vec{r}}_s + 3\dot{\vec{r}}_3\right)/8$$

$$\vec{r}_5 = \vec{r}_s + h\left(13\dot{\vec{r}}_s - 27\dot{\vec{r}}_2 + 42\dot{\vec{r}}_3 + 8\dot{\vec{r}}_4\right)/54$$

$$\vec{r}_6 = \vec{r}_s + h\left(389\dot{\vec{r}}_s - 54\dot{\vec{r}}_2 + 966\dot{\vec{r}}_3 - 824\dot{\vec{r}}_4 + 243\dot{\vec{r}}_5\right)/4320$$

$$\vec{r}_7 = \vec{r}_s + h\left(-231\dot{\vec{r}}_s + 81\dot{\vec{r}}_2 - 1164\dot{\vec{r}}_3 + 656\dot{\vec{r}}_4 - 122\dot{\vec{r}}_5 + 800\dot{\vec{r}}_6\right)/20$$

$$\vec{r}_8 = \vec{r}_s + h\left(-127\dot{\vec{r}}_s + 18\dot{\vec{r}}_2 - 678\dot{\vec{r}}_3 + 456\dot{\vec{r}}_4 - 9\dot{\vec{r}}_5 + 576\dot{\vec{r}}_6 + 4\dot{\vec{r}}_7\right)/288$$

$$\vec{r}_9 = \vec{r}_s + h\left(1481\dot{\vec{r}}_s - 81\dot{\vec{r}}_2 + 7104\dot{\vec{r}}_3 - 3376\dot{\vec{r}}_4 + 72\dot{\vec{r}}_5 - 5040\dot{\vec{r}}_6 - 60\dot{\vec{r}}_7 + 720\dot{\vec{r}}_8\right)/820$$

$$\vec{r}(t_s + h) = \vec{r}_s + h\left[41\left(\dot{\vec{r}}_s + \dot{\vec{r}}_9\right) + 27\left(\dot{\vec{r}}_3 + \dot{\vec{r}}_5\right) + 272\dot{\vec{r}}_4 + 216\left(\dot{\vec{r}}_6 + \dot{\vec{r}}_8\right)\right]/840$$

The equations for the velocity shall be identical with those for the position under the transformation $\dot{\vec{r}} \rightarrow \ddot{\vec{r}}$ and $\vec{r} \rightarrow \dot{\vec{r}}$.

The Runge-Kutta formulae shall be applied three times to obtain state vectors at times t_s + 120 seconds, t_s + 240 seconds, and t_s + 360 seconds. These state vectors shall be used to compute the acceleration vectors at the corresponding times. The accelerations shall be numbered according to Table A-2.

Table A-2. Vectors from the Sixth-Order Starter Algorithm

INDEX	TIME	STATE VECTOR SOURCE
5	$t_{s - h}$	INVERTED CORRECTOR FORMULA
4	t_s	INITIAL STATE VECTOR
3	$t_{s + h}$	SINGLE-STEP INTEGRATOR
2	$t_{s + 2h}$	SINGLE-STEP INTEGRATOR
1	$t_{s + 3h}$	SINGLE-STEP INTEGRATOR

A.3.4.3 Inverted Sixth-Order Position Corrector Formula

The integration starter process shall be completed by computing the acceleration $\ddot{\vec{r}}_5$ at time $t_5 = t_s$ - 120 seconds using the inverted position corrector formula:

$$\ddot{\vec{r}}_5 = \frac{1}{u_5}\left(\frac{\vec{r}_1 - \vec{r}_2}{h^2} - \frac{\dot{\vec{r}}_1}{h} - \sum_{i=1,4} u_i \ddot{\vec{r}}_i\right)$$

where $\vec{r}_1$ and $\dot{\vec{r}}_1$ are the position and velocity at $t_1 = t_s + 3h$ and $\vec{r}_2$ is the position at $t_2 = t_s + 2h$.

The u_i are given in Table A-3.

Table A-3. Sixth-Order Position Corrector Coefficients

i	u_i
1	-0.2548611111
2	-0.3750000000
3	0.19583333333
4	$-0.8055555556 \times 10^{-1}$
5	$0.1458333333 \times 10^{-1}$

A.3.4.4 Sixth-Order Multistep Integrator

The sixth-order multistep integrator shall be used to propagate the state vector with an initial time t_s forward at intervals of h = 120 seconds. The multistep integrator shall begin following the use of the single-step integrator and the inverted sixth-order position corrector formula. The multistep integrator shall involve the four steps listed in Section A.3.4.1, item c.

A.3.4.4.1 Sixth-Order Position Predictor

At time $t = t_s$ the position $\vec{r}_s$, velocity $\dot{\vec{r}}_s$, and acceleration $\ddot{\vec{r}}_s = \ddot{\vec{r}}_1$ are known. The predicted position $\vec{r}_h$ at time $t_s + h$ shall be computed from

$$\vec{r}_h = \vec{r}_s + h\dot{\vec{r}}_s + h^2 \sum_{i=1,5} v_i \ddot{\vec{r}}_i$$

where $\ddot{\vec{r}}_i$ = acceleration at time $t = t_s - (i - 1)h$ and the v_i are given in Table A-4.

Table A-4. Sixth-Order Position Predictor Coefficients

i	v_i
1	0.9909722222
2	-1.108333333
3	1.004166667
4	-0.4805555556
5	$0.9375000000 \times 10^{-1}$

A.3.4.4.2 Sixth-Order Velocity Corrector

The velocity $\dot{\vec{r}}_h$ at time $t_s + h$ shall be computed from

$$\dot{\vec{r}}_h = \dot{\vec{r}}_s + h \sum_{i=1,6} q_i \ddot{\vec{r}}_{i-1}$$

where $\ddot{\vec{r}}_0$ = acceleration computed from the equation of motion in Section A.3.4 based on the predicted position $\vec{r}_h$ computed in Section A.3.4.4.1

and the q_i are given in Table A-5.

Table A-5. Sixth-Order Velocity Corrector Coefficients

i	q_i
1	0.3298611111
2	0.9909722222
3	-0.5541666667
4	0.3347222222
5	-0.1201388889
6	$0.1875000000 \times 10^{-1}$

A.3.4.4.3Sixth-Order Position Corrector

The position vector $\vec{r}_h$ shall be corrected using the sixth-order position corrector

$$\vec{r}_h = \vec{r}_s + h\dot{\vec{r}}_h + h^2 \sum_{i=1,5} u_i \ddot{\vec{r}}_{i-1}$$

where the u_i are given in Table A-3. The acceleration $\ddot{\vec{r}}_0$ shall be recomputed for further use based on the corrected value of $\vec{r}_h$ and using the equation of motion in Section A.3.4.

A.3.5 Interpolation of the Composite Customer Support Ephemeris and the TDRS Ephemeris

The USS and TT&C ADPE subsystems shall require the customer and TDRS spacecraft state vectors at times between the epochs of the vectors in the TDRS ephemeris and the composite customer support ephemeris. These states shall be computed by interpolating between the ephemeris points. The interpolation shall involve the first-order Lagrange polynomials. For a time t between the epoch times t_1 and t_2 ($t_1 \le t \le t_2$) of two vectors in the ephemeris, the Lagrange polynomials are:

$$L_1(t) = \frac{t - t_2}{t_1 - t_2}$$

$$L_2(t) = \frac{t - t_1}{t_2 - t_1}$$

The Lagrange polynomials shall be used to compute the third-order Hermite polynomials

$$H_{11}(t) = [1 + 2L_2(t)]\ L_1^2\ (t)$$

$$H_{12}(t) = [1 + 2L_1(t)]\ L_2^2\ (t)$$

$$H_{21}(t) = (t - t_1)\ L_1^2\ (t)$$

$$H_{22}(t) = (t - t_2)\ L_2^2\ (t)$$

and their derivatives

$$\dot{H}_{11}(t) = \frac{-6L_1(t)\ L_2(t)}{(t_2 - t_1)}$$

$$\dot{H}_{12}(t) = \frac{6L_1(t)\ L_2(t)}{(t_2 - t_1)}$$

$$\dot{H}_{21}(t) = L_1(t)\ [L_1(t) - 2L_2(t)]$$

$$\dot{H}_{22}(t) = L_2(t)\ [L_2(t) - 2L_1(t)]$$

The interpolated position and velocity shall be

$$\vec{r}(t) = H_{11}(t)\vec{r}_1 + H_{12}(t)\vec{r}_2 + H_{21}(t)\dot{\vec{r}}_1 + H_{22}(t)\dot{\vec{r}}_2$$

$$\dot{\vec{r}}(t) = \dot{\vec{H}}_{12}(t)\ (\vec{r}_2 - \vec{r}_1) + \dot{\vec{H}}_{21}(t)\dot{\vec{r}}_1 + \dot{\vec{H}}_{22}(t)\dot{\vec{r}}_2$$

where the relationship $\dot{H}_{11}(t) = -\dot{H}_{12}(t)$ was used. The interpolation constants shall be

$\vec{r}_1$, $\vec{r}_2$ = position vectors at times t_1, t_2

$\dot{\vec{r}}_1$, $\dot{\vec{r}}_2$ = velocity vectors at times t_1, t_2.

A.3.6 Delta-T Rotation Matrix

The Delta-T rotation matrix shall be used to adjust the vectors in the customer support ephemeris in the USS and TT&C ADPE Subsystems. Application of this matrix corresponds to a rotation about the Earth's spin axis, which is the z-axis in the MOD inertial coordinate system. The slipped position and velocity vectors $\vec{r}_s, \dot{\vec{r}}_s$ shall be obtained from the original position and velocity vectors $\vec{r}_0, \dot{\vec{r}}_0$ by

$$\vec{r}_s = D_s \vec{r}_0$$

$$\dot{\vec{r}}_s = D_s \dot{\vec{r}}_0$$

where

$$D_s = \begin{bmatrix} \cos(\omega_e t_s) & -\sin(\omega_e t_s) & 0 \\ \sin(\omega_e t_s) & \cos(\omega_e t_s) & 0 \\ 0 & 0 & 1 \end{bmatrix}$$

and where t_s = amount of the launch slip (Delta-T)

ω_e = angular velocity of the Earth as defined in Section A.3.2.

The vector epoch times shall also be changed by the addition of the slip amount t_s to the vector epoch times. Late arrival of Delta-T messages shall be accommodated by retaining the entire customer support ephemeris until the end of the customer service period. Following the application of the Delta-T rotation to the customer support ephemeris, the Delta-T message shall be discarded. The Ground Terminal shall proceed to treat the slipped vectors in the same manner it would have if no slip had occurred. Vectors arriving after the Delta-T message shall be properly referenced to the new launch time, and the Ground Terminal shall not apply the rotation to these new vectors.

A.4 Vector Processing Ground Rules

The following pages contain the vector processing ground rules from the 530-ICD-NCC-FDF/WSC document. They are included in this section for reference only. The 530-ICD-NCC-FDF/WSC shall be the controlling document for these ground rules. Implementation of the algorithms presented in this Appendix shall be consistent with these ground rules.

A.4.1 General Application

This section contains the ground rules and constraints that are general in nature. Before addressing the ground rules the message class codes (MCC), state vector operations messages (OPMs), and state vector types will be discussed.

Two different message class codes (10 and 15) will be accepted for state vectors OPMs (state vector messages). State vectors will be processed identically irrespective of message class code. A state vector OPM will contain one OPM header, followed by up to three sets of state vector data for a single customer.

The state vector types that will be processed at the WSC Ground Terminals are as follows:

VECTOR TYPE	APPLICATION	PHASE
1	Free-flight	Free-flight state vectors
2	Transition to free-flight	A type 2 vector is used only as the transition vector from maneuver sequence vectors to free-flight vectors
3		Not used
4	Ignition	Maneuver sequence state vectors
5	Burnout	
6	Reentry	
7	Launch or on-orbit	
8	Stationary	Stationary state vectors

The following general ground rules apply:

a. Except for permanent Earth Stations, customer trajectory data is used according to priority based on receipt time. For each customer, the most recently received vector, regardless of type, will be used from its epoch time forward. Previously received vectors with later epochs will not be used following receipt of a new vector with an equal or earlier epoch.

b. Free-flight (type 1-2) vectors will be rejected by the Ground Terminal if they fail syntax, check sums, or if (1) the magnitude of the position vector is less than 6356 kilometers or (2) the epoch time of the vector is more than 12 hours earlier than the time of receipt at the Ground Terminal. If a free-flight vector is rejected for any of the above reasons, a state vector reject message will be sent to NASA.

c. Except for permanent Earth stations, no stationary state vector will be propagated more than 24 hours from its epoch time. No free-flight state vector will be propagated more than 12 hours from its epoch time.

d. A single state vector OPM may contain up to three state vectors.

e. OPM classes 61, 64, and 65 will be sent to NASA without TDRSS Operations and Control Center (TOCC) operator intervention.

f. The formats for free-flight (types 1-2), maneuver sequence (types 4-7), and stationary (type 8) state vector OPMs are identical. The vector type (types 1, 2, 4-8) parameters indicate whether an OPM contains free-flight, maneuver sequence, or stationary state vectors.

g. No more than 5000 vectors received from NCC for each customer will be stored at each WSC Ground Terminal. Vectors with no future applicability will be deleted. No more

than 15,000 vectors received from NCC will be stored at each WSC Ground Terminal for all customers. No more than 72 vectors for each TDRS will be stored at each WSC Ground Terminal.

The following general ground rules apply only to permanent Earth stations.

h. The NCC will provide each WSC Ground Terminal with a list of no more than 63 permanent Earth stations. For permanent Earth stations vectors with types 1 through 7 will be rejected by the Ground Terminals.

i. For permanent Earth stations, the most recently received stationary vector will be used irrespective of epoch or receipt times. Previously received stationary vectors will not be used following receipt of a new vector.

j. There is no limit to the propagation period for permanent Earth station vectors. The permanent Earth stations vectors will be retained permanently at the Ground Terminals. Permanent Earth station vectors may be updated by the NCC at any time by use of an OPM 10 or 15.

A.4.2 Maneuver Sequences

This section addresses the ground rules that are related to the use of maneuver sequences. The formats for maneuver vector sequences are shown in Table A-6.

The following ground rules apply to maneuver sequences:

a. The time between epochs of successive maneuver sequence (types 4-7) state vectors can be variable, with a minimum of 0.5 second and a maximum of 6 minutes. The maximum number of vectors in a single maneuver sequence shall be 800.

b. A maneuver sequence must include at least seven state vectors. The required seven state vectors are as follows:

State Vector		1	2	3	4	5	6	7
Vector Type	Launch or on-orbit sequence	4	7	7	2	7	7	5
				-or-				
	Reentry sequence	4	6	6	8	6	6	5
Epoch		t_1	t_2	t_3	t_4	t_4	t_5	t_6

where $t_6 = t_4 + 6$ minutes

Table A-6. Maneuver Vector Sequence Formats

STATE VECTOR NUMBER	VECTOR TYPE	VECTOR EPOCH
1	4	t_1
2	7 (6)	t_2
• • •	• • •	• • •
n	7 (6)	t_n
n +1	2 (8)	t_{n+1}
n +2	7 (6)	t_{n+1}
• • •	• • •	• • •
n + m	7 (6)	t_{n+m-1}
n + m + 1	5	t_{n+1} + 6 min.

NOTES

1. ALL MANEUVER SEQUENCES WILL HAVE THE ABOVE FORMAT.
2. THE MANEUVER SEQUENCE THAT INCLUDES THE TYPE 6 AND TYPE 8 VECTORS WILL BE USED FOR REENTRY ONLY.
3. THE VECTOR EPOCH TIME t_{n+1} IS THE END OF THE MANEUVER (TYPE 2 VECTOR) OR THE REENTRY (TYPE 8 VECTOR). THE SUBSEQUENCE VECTORS IN THE MANEUVER SEQUENCE ARE SUPPLIED TO PROVIDE TIME FOR THE IMPLEMENTATION OF THE TYPE 2 AND TYPE 8 VECTORS.
4. ONLY THE 4800-BIT BLOCK CONTAINING THE TYPE 4 VECTOR OF A MANEUVER SEQUENCE WILL HAVE THE ACKNOWLEDGMENT BIT SET IN THE REAL-TIME MODE.

c. Between transmission of the type 4 vector of a maneuver sequence and the type 5 vector of that sequence, only those vectors in the sequence should be transmitted. For a customer in the real-time mode, receipt of any other vector for <u>any</u> customer SIC will result in WSC Ground Terminal generation of a type 2 or 8 vector (as appropriate) and a type 5 vector to terminate the sequence. For a customer not in the real-time mode, receipt of any other vector for <u>any</u> customer SIC will result in the rejection of the entire sequence.

d. A type 2, 6, or 7 vector will be rejected if it is not received as part of a maneuver sequence. For customers in the real-time mode a maneuver sequence received without a

type 2 or 8 vector will be used as received and the WSC Ground Terminal will generate a type 2 or 8 vector (as appropriate). For customers not in the real-time mode, a maneuver sequence received without a type 2 or 8 vector will be rejected.

e. No reasonableness checks or gross validity checks are made for maneuver sequences. Syntax checks and checksum verification are performed for maneuver sequences.

A.4.3 Delta-T Applications

This section addresses the ground rules and constraints that are related to the use of Delta-T OPMs to shift the epoch times of maneuver sequences and other vectors that are in place at the Ground Terminal. The epoch shifts are applied to vectors in an Earth-fixed, rotating coordinate system. The purpose of the Delta-T function is to adjust for any launch slips that occur during the launch phase of Shuttle missions.

There are several important terms associated with the use of the Delta-T OPM function that need to be defined. These are as follows:

a. The Delta-T adjustment (ΔT) in the Delta-T OPM is the change in the current epoch times of the vectors.

b. The <u>original</u> epoch of a vector in the Ground Terminal is the epoch of the vector as transmitted to the WSC Ground Terminal.

c. The <u>current</u> epoch of a vector in the Ground Terminal is the original epoch of the vector plus the sum of all Delta-T adjustments (ΔT) received at the WSC Ground Terminal.

The following ground rules apply to the use of Delta-T OPMs:

a. Application of a Delta-T OPM does not change any SHO start or stop times.

b. The Delta-T adjustment (ΔT) is always calculated from the current epochs of the vectors because Delta-T adjustments are cumulative.

c. A Delta-T OPM must be received at the Ground Terminal at least 30 seconds prior to launch to ensure application. Delta-T OPMs arriving later will be applied as soon as possible.

d. A series of Delta-T OPMs may be sent for a given customer. They will be applied successively as they arrive.

e. Delta-T adjustments may be positive (delay) or negative (advance), but the absolute value of the Delta-T adjustment must be less than 12 hours.

f. The Delta-T adjustment will be applied to all vectors that are in place at the receipt time of the Delta-T OPM. It will not be applied to vectors subsequently received at the WSC Ground Terminal.

g. A Delta-T OPM transmitted between transmissions of the type 4 and type 5 vectors of a maneuver sequence for any customer will result in rejection of the maneuver sequence.

A.4.4 Real-Time Mode

This section addresses the ground rules that are related to operations in the real-time mode at the Ground Terminal.

a. A customer will enter the real-time mode upon receipt of any of the following messages less than 6 minutes prior to the start of service or during service.

   1. Delta-T message.

   2. Type 1 or 8 vector with an epoch prior to the end of service.

   3. Type 2, 4, 5, 6, or 7 vector as part of a maneuver sequence and with an epoch time in the future and prior to the end of service. Real-time maneuver sequence support will not begin until there are at least two maneuver vectors at the WSC Ground Terminal with epoch times in the future.

b. The customer will remain in the real-time mode until completion of updating of the customer ephemeris. This will generally be within 30 seconds of receipt of the OPM. (Receipt of multiple Delta-T OPMs may delay implementation.)

c. The Ground Terminal will notify NASA when a customer enters and exits the real-time mode.

d. Acknowledgment of all blocks of a maneuver sequence shall be requested if the epoch of the type 4 vector is more than 7 minutes later than start of transmission. If the epoch of the type 4 is less than 7 minutes later than start of transmission, only the block containing the type 4 vector shall request acknowledgment.

e. There can only be one real-time customer per SGLT at any given time.

f. Once maneuver sequence support in the real-time mode has begun, if current time passes the epoch of the last maneuver sequence vector at the Ground Terminal , the remainder of the sequence will be rejected and maneuver sequence support will be terminated.

Appendix B.
Data Presence Monitoring and Data Quality Monitoring Functional Requirements

Appendix B. Data Presence Monitoring and Data Quality Monitoring Functional Requirements

B.1 Introduction

This Appendix specifies the functional requirements for the Data Presence Monitoring (DPM) and Data Quality Monitoring (DQM) capabilities of the WSC. Section B.2 describes the DPM functional requirements. Section B.3 describes the DQM functional requirements.

B.2 Data Presence Monitoring Requirements

During a scheduled service, the Data Presence Monitor shall continuously monitor the forward data and clock channels between the DIS and the USS for clock signal presence and data signal transition density. Failure of the DPM shall not affect forward data and clock transmission between the DIS and the USS. This restriction is not meant to prohibit use of the DPM measurements as criteria for automatic fault detection and failover.

The following parameters shall be provided to the USS ADPE by the data presence monitor. These parameters represent measured performance over a measurement interval nominally one second in length.

a. Clock Signal Presence - The value "Yes" for clock signal presence shall indicate a transition density between 99% and 101%, (98% to 102% for clock rates less than or equal to 500 Hz) relative to the scheduled clock rate, during the measurement interval.

b. Data Signal Presence - Data signal presence shall be a data transition measurement during the measurement interval. Data transition density shall be determined to resolution of 1% (2% for data rates less than or equal to 500 bps).

B.3 Data Quality Monitoring Requirements

During a scheduled service, the Data Quality Monitor shall continuously monitor the return data and clock signals for data quality utilizing commanded parameters which describe the data frame structure and for clock presence utilizing the commanded clock rate. Failure of the Data Quality Monitor shall not affect return data and clock transmission between the USS and the DIS. This restriction is not meant to prohibit use of the DQM measurements as criteria for automatic fault detection and failover. For customer tape recorder playback data rates less than or equal to 30 Mbps, data quality monitoring shall be provided automatically for data which may be transmitted in either the forward or reverse direction.

B.3.1 DQM Configurable Parameters

The following parameters for DQM shall be configurable by the USS ADPE based on the return service SHO:

a. Frame length to 32000 bits.

b. Frame synchronization (sync) word length to 32 bits.

c. Frame synchronization word bit pattern.

d. N_1, Number from 0 to 5 of bit errors allowed for acceptable sync word detection in the search, check, lock, and flywheel modes.

e. N_5, Enable/Disable of bestmatch strategy in the search mode 1 = enable, 0 = disable.

f. N_2, Number from 1 to 5 of consecutive, detected sync words in the check mode.

g. N_3, Number of undetected sync words in the lock mode; always equal to 1.

h. N_4, Number from 0 to 5 of consecutive, undetected sync words in the flywheel mode.

B.3.1.1 Frame Rate Limitations

The return service parameters of SHO uniquely specify the frame rate of a data channel, defined as the SHO-commanded data rate divided by the SHO-commanded frame length. The contractor shall select a threshold frame rate which represents the maximum number of frames that the DQM can monitor per second per data channel. The threshold value selected shall not be less than 1024 frames per second per channel. The following limitations shall apply to the synchronization strategy and status collection requirements specified in paragraphs B.3.2 and B.3.3:

a. When the SHO-specified frame rate is less than or equal to the threshold, the DQM shall examine every frame.

b. When the SHO-specified frame rate exceeds the threshold, the DQM shall examine every Nth frame, where N is the smallest integer such that the SHO-specified frame rate divided by N does not exceed the threshold.

B.3.2 DQM Synchronization Strategy

The following synchronization strategy for data quality monitoring shall function for true or inverted data. Refer to Figure B-1.

a. Search Mode. The data signal shall be searched until a frame sync word is detected with $\leq N_1$ bit errors. For data rates less than or equal to 30 Mbps, a simultaneous search for forward and reverse frame synchronization words shall be performed. If bestmatch strategy is enabled, continue the data signal search until the next sync word is expected.

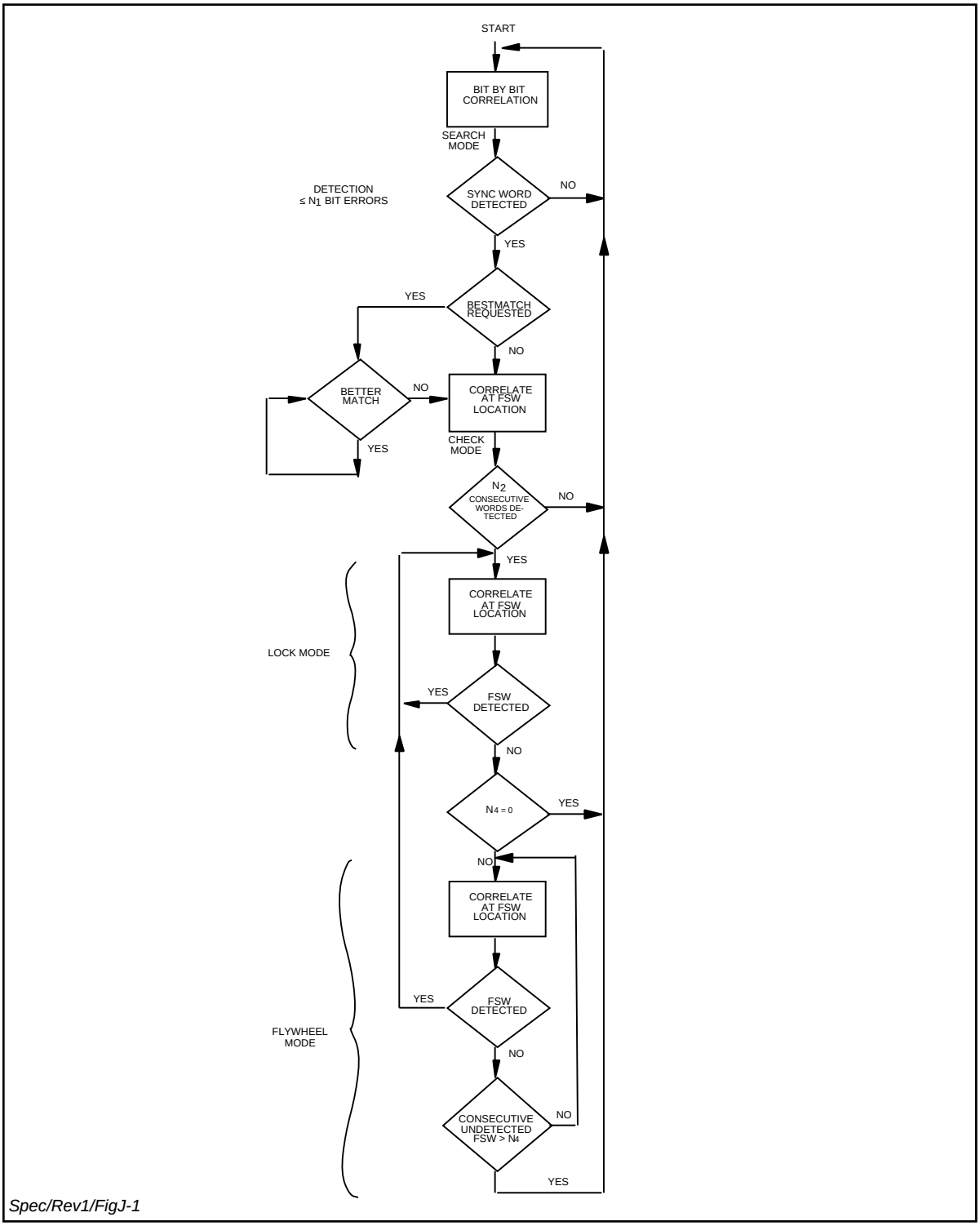

Figure B-1. DQM Synchronization Strategy

If another sync word is detected with fewer errors, continue the search until the next sync word is expected. If a sync word with fewer errors is not detected, transition to the check mode.

b. Check Mode. The data signal shall be examined for N_2 consecutive, detectable sync words. If N_2 consecutive sync words are not detected, the synchronization process shall revert to the search mode. If N_2 consecutive sync words are detected, the process shall transition to the lock mode.

c. Lock Mode. The data signal shall be continually examined for detectable sync words. If an expected sync word is not detected, the synchronization process shall transition to the flywheel mode, or directly to search mode if N_4 is set to zero.

d. Flywheel Mode. The data signal shall be continually examined for detectable sync words. If a sync word is successfully detected, the synchronization process shall revert to the lock mode. If more than N_4 consecutive sync words fail detection, including the failed detection that caused transition into flywheel mode, the synchronization process shall revert to the search mode.

B.3.3 DQM Status Data

The following parameters shall be provided to the USS ADPE by the data quality monitor. These parameters represent measured performance over a measurement interval nominally one second in length.

a. Frame Synchronization Mode - This parameter is the mode of the frame sync process (search, check, lock, or flywheel) at the end of the measurement interval.

b. Frame Lock Count - This parameter is the number of detected frame sync words in the lock mode during the measurement interval. The count shall be reset to zero at the start of each measurement interval. The count at the end of each measurement interval shall be provided to the ADPE.

c. Frame Count - This parameter is the total number of frame sync words (detected plus undetected) in the lock and flywheel modes during the measurement interval. The count shall be reset to zero at the start of each measurement interval. The count at the end of each measurement interval shall be provided to the ADPE.

d. Sync Lock Dropout Count - This parameter is the number of transitions into the search mode during the measurement interval. The count shall be reset to zero at the start of each measurement interval. The count at the end of each measurement interval shall be provided to the ADPE.

e. Frame Sync Word BER - This parameter is the number of bit errors in the frame sync word bits divided by the number of frame sync word bits accumulated over those frames in the measurement interval during which the DQM is in Lock Mode. The BER measurement for each measurement interval shall be provided to the ADPE.

f. Clock Presence - A "yes" value for this parameter shall indicate a transition density between 99% and 101% (98% to 102% for clock rates less than or equal to 500 Hz), relative to the commanded clock rate, during the measurement interval.

g. Data Signal Presence - Data signal presence shall be a data transition measurement during the measurement interval. Data transition density shall be determined to a resolution of 1 percent (2 percent for data rates less than or equal to 500 bps).

Appendix C.
NASCOM Formatting, Reformatting, Multiplexing and Demultiplexing Functional Requirements

Appendix C. NASCOM Formatting, Reformatting, Multiplexing and Demultiplexing Functional Requirements

C.1 Introduction

This Appendix specifies the DIS data formatting, multiplexing and demultiplexing functional requirements for the low rate ($\leq$ 7 Mbps) multiplexer/demultiplexers and for the HDR multiplexers (HDRM).

The purpose of this Appendix is to ensure that the low-rate multiplexing and demultiplexing and high-rate multiplexing functions specified in Sections 8.2.7.3, 8.2.7.4, and 8.2.10 will be fully compatible and interoperable with existing NASCOM Multiplexer-Demultiplexers (MDMs) and Statistical Demultiplexers at GSFC and JSC.

C.2 Low-Rate Data Formatting, Multiplexing and Demultiplexing

This section specifies the low-rate data ($\leq$ 7 Mbps) formatting, multiplexing and demultiplexing functional requirements. An overview of the specified functional flow and block formats is given in Section C.2.1. Multiplexer and demultiplexer functional requirements are specified in Sections C.2.2 and C.2.3, respectively. Section C.2.4 specifies control and monitoring functions.

C.2.1 Overview of Low-Rate Data Processing Requirements

This section specifies the low-rate multiplexing and demultiplexing functional flow and block formats.

C.2.1.1 Functional Flow

C.2.1.1.1 Low-Rate Multiplexing

The multiplexing function shall be capable of buffering, formatting, and multiplexing input data streams from input channels into a composite data stream for transmission to the common carrier interface.

Figure C-1 illustrates the multiplexer functional flow. The multiplexer shall accept input clocks and blocked or unblocked bit-contiguous data streams.

Each input channel processor shall buffer the received data stream and shall provide formatted blocked data to the output multiplexer at the output clock rate. The output multiplexer shall interleave blocks from different input channel processors into a single composite output data stream. The output data rate shall be controlled by a clock signal received from the common carrier interface. The operation of the multiplexer shall be controllable either from the DIS

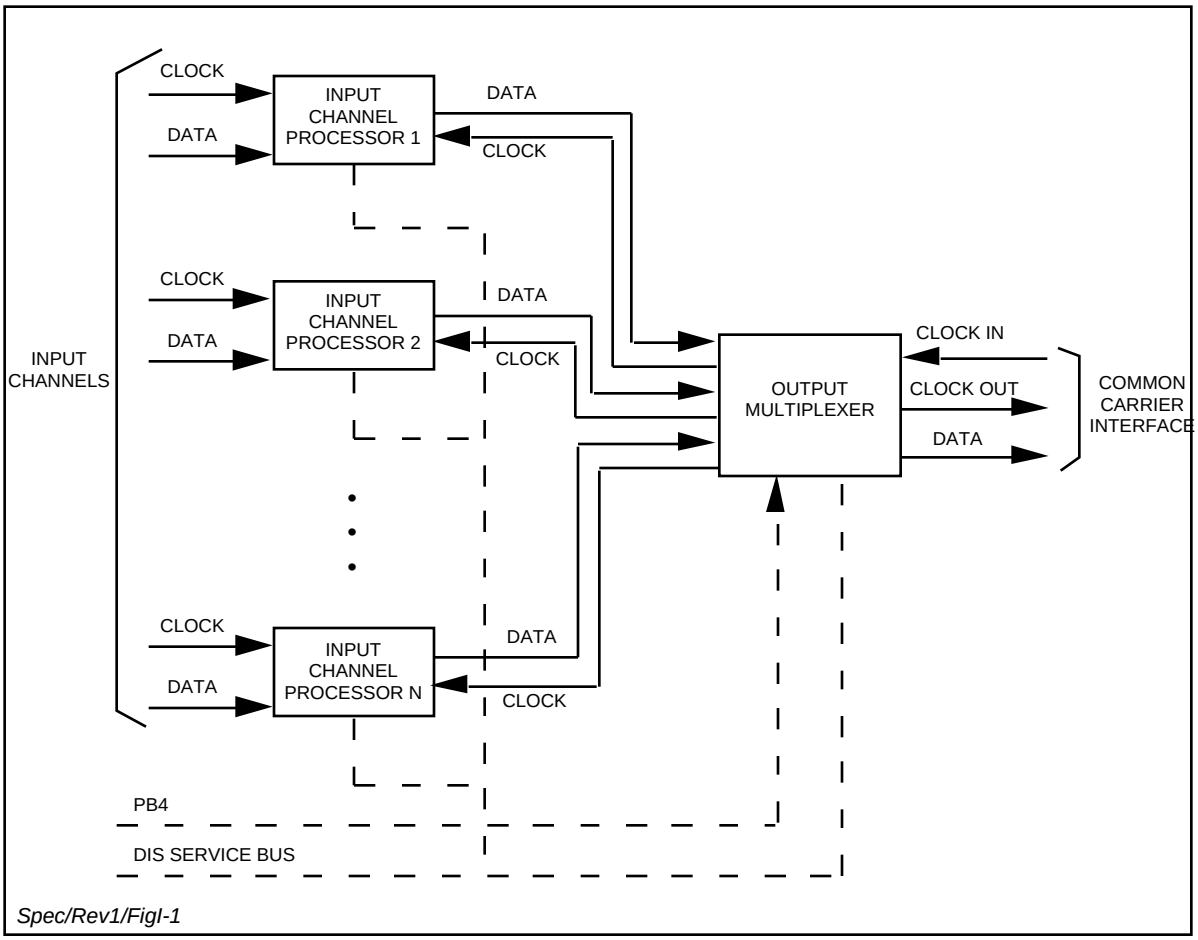

Figure C-1. Multiplexer Functional Flow

ADPE via the DIS service bus or from the front panel. PB4 time shall be furnished to the output multiplexer to support data time tagging.

C.2.1.1.2 Low-Rate Demultiplexing

The demultiplexing function shall be capable of demultiplexing, buffering, and reformatting the composite input data stream from the common carrier interface for transmission to the output channels.

Figure C-2 illustrates the demultiplexer functional flow. The demultiplexer shall accept one clock and the data stream from the common carrier interface. The input demultiplexer shall deinterleave blocks from the composite data stream into multiple data streams for the output channel processors. Each output channel processor shall buffer the received data blocks and shall provide blocked or unblocked bit-contiguous data to an output channel at a specified clock rate. A CTFS reference frequency shall be distributed to the output channel processors to provide for output clock generation. The operation of the demultiplexer shall be controllable either from the DIS ADPE via the DIS service bus or from the front panel.

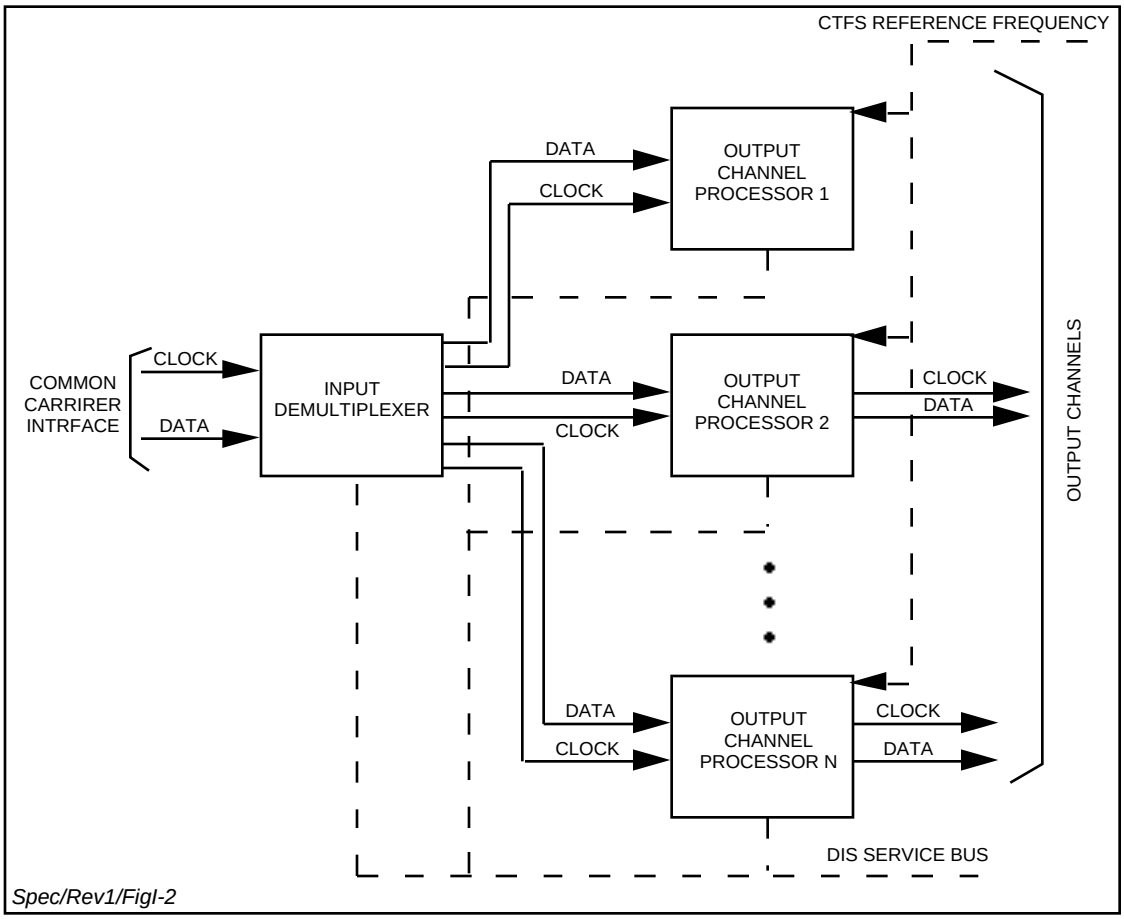

Figure C-2. Demultiplexer Functional Flow

C.2.1.2 Formats

This section specifies the formatting modes for the low-rate multiplexing/demultiplexing function. Three types of 4800-bit block formats are utilized: the NASCOM 4800-bit block format, the NASCOM 4800-bit block format with modified header, and the NASCOM TDRSS 4800-bit block format. Data may be received from input channels in either blocked or in unblocked bit-contiguous format. All data shall be transferred from multiplexers to demultiplexers in 4800-bit blocks preceded by 80-bit link headers. The demultiplexed output data may be delivered to output channels either in blocked or in unblocked bit-contiguous format.

The applications for the different block formats for the various types of forward and return data signals are specified in Tables C-1 through C-4.

Table C-1. GSFC/JSC Multiplexer Formats

SIGNAL	FORMAT	
	INPUT CHANNEL	MULTIPLEXER OUTPUT
CUSTOMER RETURN DATA (≤ 7 Mbps), ENCRYPTED OPERATIONS VOICE/DATA, TDRS COMMAND DATA	UNBLOCKED, BIT-CONTIGUOUS	NASCOM TDRSS 4800-BIT BLOCK
CIRCUIT ASSURANCE BLOCKS (CABs)	NOT APPLICABLE	NASCOM TDRSS 4800-BIT BLOCK
TDMs FROM S-BAND TT&C ADPE OR SGLT EXEC ADPE	NASCOM 4800-BIT BLOCK	NASCOM 4800-BIT BLOCK WITH MODIFIED NETWORK HEADER (JSC) UNMODIFIED NETWORK HEADER (GSFC)
CUSTOMER RETURN DATA (≤ 7 Mbps) FROM LINE OUTAGE RECORDER DEMULTIPLEXER OUTPUT CHANNEL	NASCOM TDRSS 4800-BIT BLOCK	NASCOM TDRSS 4800-BIT BLOCK
TDMs FROM LINE OUTAGE RECORDER PLAYBACK DEMULTIPLEXER OUTPUT CHANNEL	NASCOM 4800-BIT BLOCK WITH MODIFIED NETWORK HEADER	NASCOM 4800-BIT BLOCK WITH MODIFIED NETWORK HEADER

Table C-2. GSFC Demultiplexer Formats

SIGNAL	FORMAT	
	DEMULTIPLEXER INPUT	OUTPUT CHANNEL
CUSTOMER FORWARD DATA (≤ 7 Mbps), ENCRYPTED OPERATIONS VOICE/DATA, TDRS TLM DATA	NASCOM TDRSS 4800-BIT BLOCK	UNBLOCKED BIT-CONTIGUOUS
CABs	NASCOM TDRSS 4800-BIT BLOCK	NOT APPLICABLE

Table C-3. JSC Demultiplexer Formats

SIGNAL	FORMAT	
	DEMULTIPLEXER INPUT	OUTPUT CHANNEL
CUSTOMER FORWARD DATA (≤ 7 Mbps)	NASCOM TDRSS 4800-BIT BLOCK	UNBLOCKED BIT-CONTIGUOUS
CABs	NASCOM TDRSS 4800-BIT BLOCK	NOT APPLICABLE

Table C-4. Line Outage Recorder Playback Demultiplexer Formats

SIGNAL	FORMAT	
	DEMULTIPLEXER INPUT	DEMULTIPLEXER OUTPUT
MULTIPLEXED CUSTOMER RETURN DATA (≤7 Mbps)	NASCOM TDRSS 4800-BIT BLOCK	NASCOM TDRSS 4800-BIT BLOCK
CABs	NASCOM TDRSS 4800-BIT BLOCK	NO OUTPUT
TDMs	NASCOM 4800-BIT BLOCK WITH MODIFIED NETWORK HEADER	NASCOM 4800-BIT BLOCK WITH MODIFIED NETWORK HEADER

C.2.1.2.1 80-Bit Link Header

The output multiplexer shall generate an 80-bit link control header that immediately precedes each 4800-bit block. Figure C-3 shows the format of the 80-bit link control header. The fields of the 80-bit link header shall have the following format:

a. Sync pattern (Bits 1-32). A fixed 32-bit code (F9A42BB0 hexadecimal).

b. Spare bits (Bits 33-36 and 65-68).

c. Port address (Bits 37-48). A 12-bit code shall identify the destination of the associated 4800-bit data block. Codes are specified by NASCOM and provided by the DIS ADPE or local control.

d. Link sequence number (Bits 49-56). An 8-bit code shall identify the sequence of the associated 4800-bit data block.

e. Port sequence number (Bits 57-64). An 8-bit code shall be used for message accounting. For each successive block transmitted to a given port, the port sequence number shall increment from 0 to 255, then start at 0 again.

f. Cyclic redundancy check 1 (Bits 69-80). A 12-bit polynomial code shall provide error protection for the port address.

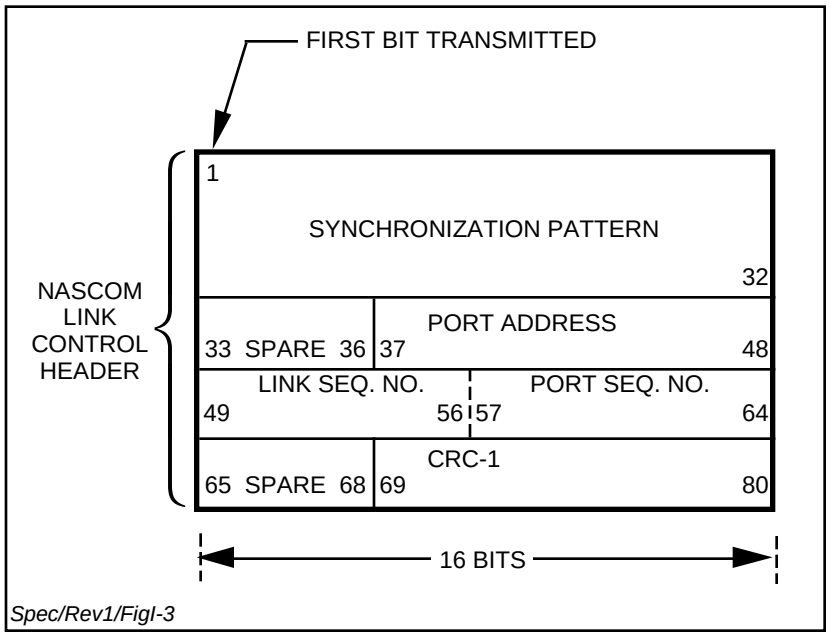

Figure C-3. NASCOM Link Control Header Format

C.2.1.2.2 4800-Bit Data Block Formats

For blocked data, three types of 4800-bit block formats shall be employed: the NASCOM 4800-bit block format, the NASCOM 4800-bit block format with modified network header, and the NASCOM TDRSS 4800-bit block format. These formats are shown in Figures C-4, C-6, and C-7. The fields of the 4800-bit block that contain critical information for data block processing and routing are the NASCOM sync field, datagram bit 82, the data length field, polynomial status flag F2, and the polynomial remainder field.

C.2.1.2.2.1 NASCOM 4800-Bit Block Format

The NASCOM 4800-bit block format is shown in Figure C-4. The fields of the NASCOM 4800-bit block format shall have the following format:

a. Network Header (Bits 1-48).

   1. NASCOM Sync Pattern (Bits 1-24). A 24-bit fixed code shall identify the beginning of each 4800-bit block 627627 hexadecimal).

   2. Source (Bits 25-32). An 8-bit code shall identify the geographic location of the source of the data block. Source codes are assigned by NASCOM. For Danzante the source code is 10110110 and for Cacique the source code is 11111001.

   3. Destination (Bits 33-40). An 8-bit code shall identify the geographic destination of the data block. Destination codes are assigned by NASCOM.

   4. Spare (Bits 41-43). This field contains logic 0s and is currently not in use.

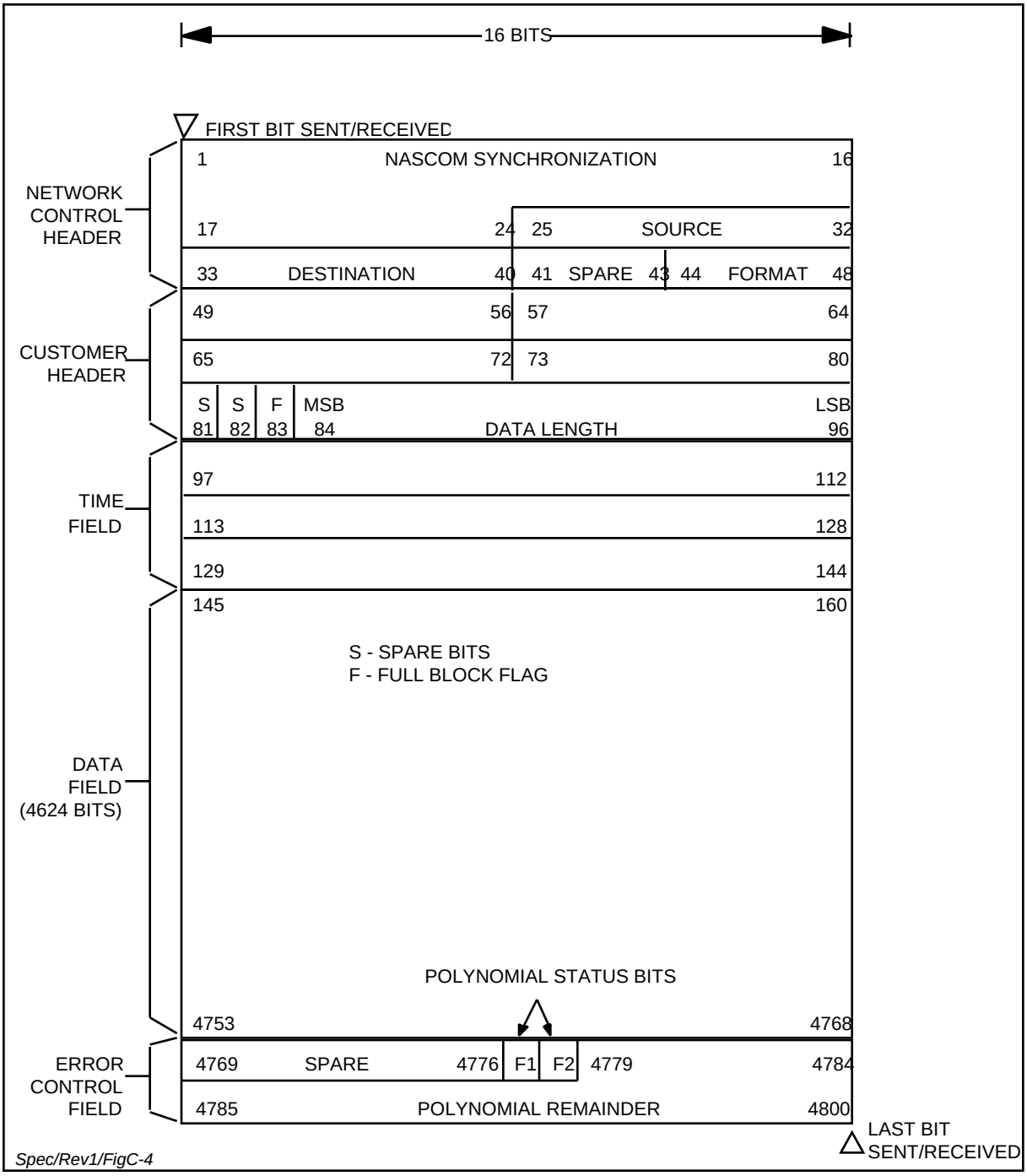

Figure C-4. NASCOM 4800-Bit Block Format

5. Format (Bits 44-48). Five bits shall identify the type of data in the data block (telemetry, real-time commands, tracking data, etc.). Format codes are assigned by NASCOM.

b. Customer Header (Bits 49-96). A 48-bit field containing customer-supplied information. The input channel processor shall not modify these bits.

1. Customer-supplied information (Bits 49-82).

2. Full Block Flag (Bit 83). Flag will be set to 1 if the data field contains 4624 bits of customer data.

3. Data Length Field (Bits 84-96). The 13-bit data length field (bits 84-96) will provide a binary count indicating the number of data bits, exclusive of fill bits, contained in the data field.

c. Time Field (Bits 97-144). A 48-bit code shall provide GMT in NASA PB-4 format with the first two bits set to zero, as shown in Figure C-5.

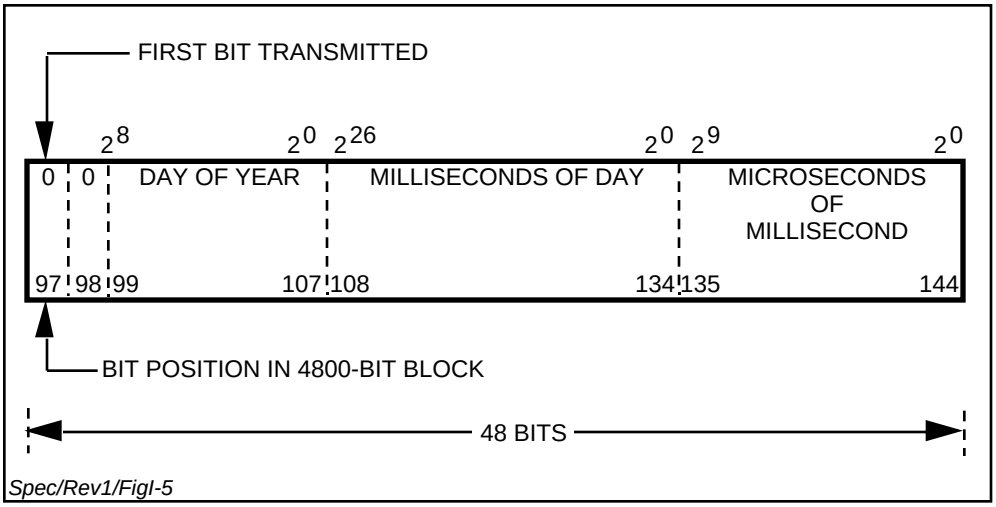

Figure C-5. PB-4 Time Code Format

d. Data field (Bits 145-4768). 4624 bits (maximum) of customer data.

e. Block error control field (Bits 4769-4800).

1. Logic 0 fill bits (Bits 4769-4776).

2. Polynomial status flag F1 (Bit 4777). 1 bit, which indicates that the block either passed (logic 0) or failed (logic 1) a polynomial check before entry into the input channel processor.

3. Polynomial status flag F2 (Bit 4778). 1 bit, which indicates that the block either passed (logic 0) or failed (logic 1) a polynomial check after processing at the

destination output channel. Bit F2 is set by the destination output channel processor.

4. Polynomial remainder (Bits 4779-4800). The 22-bit polynomial code shall be generated by the multiplexer when the modified header and/or the data time tag modes are selected. The code is generated by the input data source when the unmodified network header mode is selected and the data time tag mode is not selected. The cyclic redundancy check (CRC) polynomial processing is described in 530-ICD-NCC-FDF/WSC.

C.2.1.2.2.2 NASCOM 4800-Bit Block Format with Modified Network Header

Figure C-6 shows the format of the modified network header. The fields of the modified header shall have the following format:

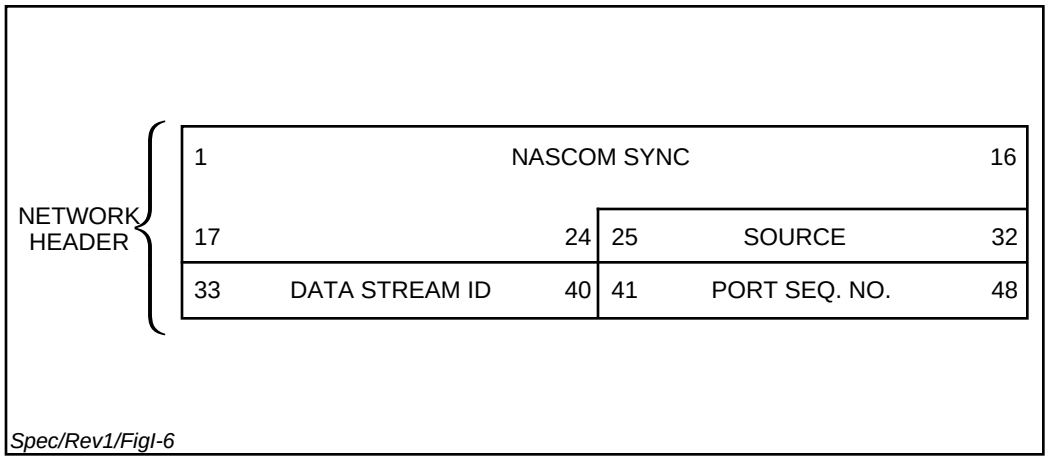

Figure C-6. Modified Network Header

a. NASCOM sync pattern (Bits 1-24). A 24-bit fixed code shall identify the beginning of each 4800-bit block (627627 hexadecimal).

b. Source (Bits 25-32). An 8-bit code shall identify the geographical location of the source of the data block. Source codes are assigned by NASCOM. For Danzante the source code is 10110110 and for Cacique the source code is 11111001.

c. Data stream ID (Bits 33-40). An 8-bit code shall identify the type of data contained in the message. Codes are specified by NASCOM.

d. Port sequence number (Bits 41-48). An 8-bit code shall provide information for block accounting. The port sequence number shall increment by 1 for each block at the input channel from 0 to 255, then start at 0 again.

C.2.1.2.2.3 NASCOM TDRSS 4800-Bit Block Format

When an input channel contains data in an unblocked form, the low data rate multiplexing shall add the necessary header and error control information to the data to provide blocked data. Blocked data that is generated by an input channel processor shall be provided in the NASCOM TDRSS 4800-bit block format shown in Figure C-7 with the datagram bit 82 set to a logic 0.

The fields of the NASCOM TDRSS 4800-bit block shall have the following format:

a. Network Header (Bits 1-48).

   1. NASCOM sync pattern (Bits 1-24). A 24-bit fixed code shall identify the beginning of each 4800-bit block (627627 hexadecimal).

   2. Spare (Bits 25-32). 8-bit field not currently designated for use. Contains all logic ones.

   3. Data stream ID (Bits 33-40). An 8-bit code shall identify the type of data contained in the message. Codes are specified by NASCOM and provided by the DIS ADPE or local control.

   4. Port sequence number (Bits 41-48). An 8-bit code shall be used for message accounting. For each successive block transmitted to a given port, the port sequence number shall increment from 0 to 255, then start at 0 again.

b. Customer Header (Bits 49-96). When the multiplexer input channel processor generates the 4800-bit block, the fields of the customer header shall have the following format:

   1. Fixed codes (Bits 49-56, 57-64, and 73-80). Three 8-bit codes configured with seven logic 0's and one logic 1 (00000001).

   2. Message type (Bits 65-72). An 8-bit code shall identify the type of data contained in the message. Codes are specified by NASCOM and provided by the DIS ADPE.

   3. Spare bit (Bit 81). Always a logic 0.

   4. Datagram (Bit 82). A logic 0 requires a continuous output mode in the demultiplexer. A logic 1 requires an immediate block transfer output mode in the demultiplexer.

   5. Full block bit (Bit 83). Logic 1 shall indicate a data block filled with customer data.

   6. Data length (Bits 84-96). A 13-bit code shall provide a binary count indicating the number of data bits, exclusive of fill bits, contained in the data field.

   7. Time field (Bits 97-144), data field (Bits 145-4768), and block error control field (Bits 4769-4800) of the NASCOM TDRSS 4800-bit block format shall be the same as described for NASCOM 4800-bit block format in Section C.2.1.2.2.1.

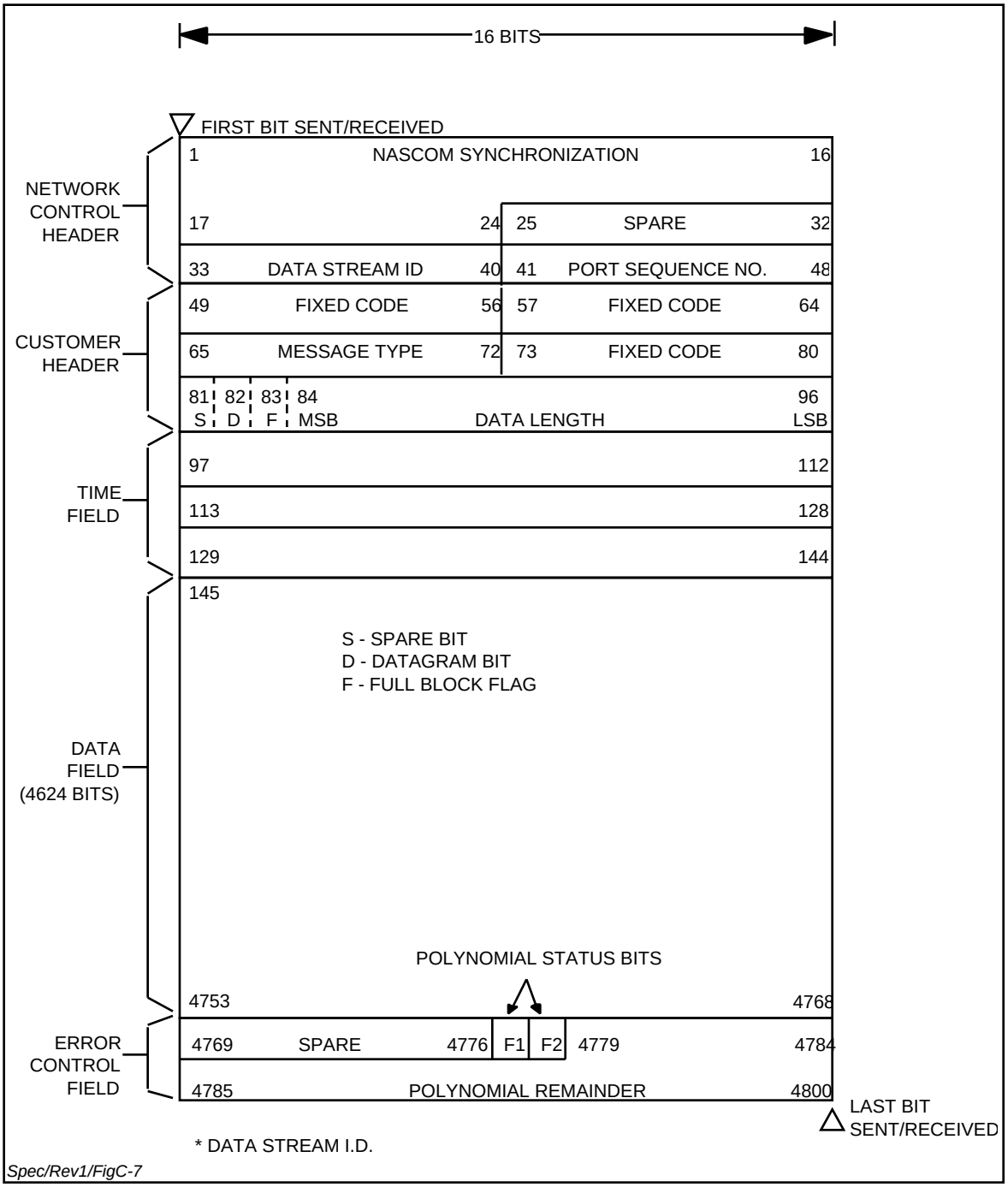

Figure C-7. NASCOM TDRSS 4800-Bit Block Format

C.2.2 Low-Rate Multiplexing

The multiplexing function shall be capable of buffering, formatting, and multiplexing input data streams from input channel processors for transmission to the common carrier interface.

C.2.2.1 Input Channel Processor Functional Requirements

Each input channel processor shall perform the following functions:

a. Receive blocked data or serial unblocked, bit-contiguous data and associated clocks from input channels at any clock rate from 100 Hz to 7 MHz.

b. Count the incoming clock pulses during one-second intervals to measure the incoming clock rate.

c. Detect out-of-tolerance input clock rates.

d. Format unblocked bit-contiguous data into NASCOM TDRSS 4800-bit blocks.

e. If one-second timeout mode is selected, provide timeout function if a block of data (4624 bits) has not been received in one second.

f. Provide information for time tagging if the time tag mode is selected.

g. Provide sufficient storage to enable priority-based servicing by the output multiplexer without buffer overflow.

h. Provide indication to the output multiplexer of the amount of data accumulated in the buffers.

i. If the immediate block transfer output mode is to be utilized at the remote demultiplexer (see Section C.2.3.2.3.2), set the datagram bit to a logical 1. If the continuous output mode is to be utilized at the remote demultiplexer, set the datagram bit to a logical 0.

j. Transfer data to the output multiplexer on a block basis.

k. Generate circuit assurance blocks once per second if no 4800-bit data block is ready for transmission.

C.2.2.1.1 Blocked Data Processing

The input channel processor shall accept 4800-bit blocked data and clock and shall detect the synchronization pattern. For the NASCOM 4800-bit block in the unmodified network header mode, the data block shall be received and transmitted without any modifications in the network header. For the NASCOM 4800-bit block in the modified network header mode, the input channel processor shall modify the network header by inserting a designated data stream ID and a sequential port sequence number. For the NASCOM TDRSS 4800-bit block (customer return data playback) and the NASCOM 4800-bit block with modified network header (TDM playback), the input channel processor shall receive and transmit the block without any modifications. Complete data blocks shall be transferred to the output multiplexer while subsequent blocks are being received.

If no data blocks are ready for transmission, a circuit assurance block (CAB) shall be generated once per second. The CAB shall be uniquely identified by setting the data length field to a logical 0 and filling the data portion of the block with the 11001001 binary fill pattern.

C.2.2.1.2 Unblocked, Bit-Contiguous Data Processing

When the input signal is unblocked bit-contiguous data, the input channel processor shall generate a 4800-bit block and shall insert the input data into the data field. The NASCOM TDRSS 4800-bit block format specified in Section C.2.1.2.2.3 shall be used. If the data portion of the block is filled completely, the full-block flag in the Customer Header shall be set to a logical 1.

The input channel processor shall provide a timeout mode. When the timeout mode is selected and if the input data rate is such that 4624 data bits are not received within a one-second period, the input channel processor shall begin formatting a new 4800-bit block. The timeout shall occur at the boundaries of 8-bit bytes as measured from the first bit of the data field of the block. The data that has been received within the one-second timeout period shall be transmitted and subsequent data received shall be entered into the next data block. The input channel processor shall fill the unused portion of the data field with a 11001001 pattern. The data length shall be inserted in the data length field, and the full-block flag shall be set to zero. If the timeout mode is not selected, the input channel processor shall generate a CAB for each one-second time period and shall continue to accumulate data bits until the 4624-bit data field is full.

C.2.2.1.3 Clock Rate Detection

The input channel processor shall be capable of accepting input clock rates between 100 Hz and 7 MHz. The input clock rate shall be compared against high and low thresholds that are plus or minus one percent of the scheduled clock rate, or 1 Hz, whichever is greater. If the input clock rate is zero, or nonzero but outside the threshold limits, the clock loss status or clock-out-of-tolerance status shall be sent to the DIS ADPE and to the local indicator.

C.2.2.2 Output Multiplexer Functional Requirements

The output multiplexer shall perform the following functions:

a. Select the next input channel processor for data block transfer based on priority (amount of data accumulated by the input channel processor and input data rate of the input channel).

b. Accept data blocks from selected input channel processor.

c. Insert a DIS ADPE or front panel selected port address into the link header.

d. Copy the incrementing port sequence number for each 4800-bit block for each port address and insert this number into the link header.

e. Insert, as required, a 48-bit PB4 time tag in the time field of each block using time information supplied by the input channel processor.

f. When time tagging is provided, polynomially encode data blocks.

g. Add to each 4800-bit block an 80-bit link control header, including a link synchronization pattern, an error-protected port address, a port sequence number and a link sequence number.

h. Time division multiplex the 4800-bit blocks from the multiplexer input ports into a single output data signal.

i. Accept transmit clock from and transmit data and clock to the common carrier interface.

C.2.2.2.1 Input Channel Processor Selection

A priority control algorithm shall determine which input channel processor has the highest priority. The priority shall be based on the number of blocks ready for transfer, the input channel clock rate, and the one-second timeout mode and CAB transmission requirements.

C.2.2.2.2 Data Block Modification

Following the transfer of a data block from the selected input channel processor to the output multiplexer, the output multiplexer shall insert the data stream ID, port sequence number and PB4 time (depending on the multiplexer operating modes selected, i.e., blocked data, modify header, and/or time tag) in the specified fields.

The output multiplexer shall compute the CRC polynomial and shall insert the value in the polynomial code field of each data block, except for NASCOM 4800-bit data blocks with unmodified network header and with no data time tagging.

C.2.2.2.3 Link Header Insertion

The final block shall be built by adding the 80-bit link header ahead of the 4800-bit data block as specified in Section C.2.1.2.1. The link sync pattern, port address , link sequence number, and port sequence number shall be inserted in the link header. The output multiplexer shall compute the error correction code for the port address.

The extended Golay (24,12) error correction technique shall generate 12 error control check bits for each 12-bit port address. The 12 error control bits shall be derived from the port address bits. The port address bits shall be treated as coefficients of a polynomial with a dummy variable X, having terms X^{22} down to X^{11}. This polynomial shall be divided, modulo-2, by a fixed generator polynomial having X^{11} as the highest order term. The coefficients of the generator polynomial, in descending order, shall be 1,1,0,0,0,1,1,1,0,1,0,1. The first 11 error control check bits shall correspond to the coefficients of the terms from X^{10} to X^{0} in the remainder polynomial resulting from the division. The resulting 23-bit block, including the 12-bit port address and the 11 error control check bits, shall correspond to the coefficients of a polynomial that is integrally divisible, modulo-2, by the generating polynomial. The twelfth error control check bit shall be an even-parity bit based on all the terms in the port address and error control fields. The port address bits shall be located in bit positions 37 to 48 of the port address field (see Figure C-3). The error control bits shall be located in bit positions 69 to 80 of the CRC field.

C.2.2.2.4 Time Tagging

In response to DIS ADPE or front panel controls, the output multiplexer shall insert the PB-4 time-of-year code in the time field of the 4800-bit block. The time of year shall be either the time the first bit of the data field is received at the input channel processor for unblocked bit

contiguous data or the time at which the input channel processor detects the synchronization pattern for blocked data. The inserted time shall be as specified in Section C.2.1.2.2.1.c.

C.2.2.2.5 Transmit Clock Reception and Data and Clock Transmission

The output multiplexer shall accept a transmit clock from the common carrier interface. This clock frequency will be fixed between 500 kHz and 10 MHz. The transmit clock to the multiplexer will be furnished by the common carrier with an accuracy of one part in 10^7 or better. The output multiplexer shall transmit 4880-bit blocks and the associated clock at the clock rate received from the common carrier.

C.2.3 Low Rate Demultiplexing

The demultiplexing function shall be capable of demultiplexing, buffering, and reformatting the input data stream from the common carrier interface for transmission on the output channels.

C.2.3.1 Input Demultiplexer Functional Requirements

The input demultiplexer shall time-division demultiplex the received 4880-bit blocks for distribution to the output channel processors. The input demultiplexer shall perform the following functions:

a. Receive 4880-bit block multiplexed data and clock signals at any rate from 500 kbps to 10 Mbps from the common carrier interface.

b. Perform link control header synchronization for the received 4880-bit blocks.

c. Verify link sequence.

d. Verify port sequence.

e. Provide port address detection and correction.

f. Provide polynomial check.

g. Route the 4800-bit block to the output channel processor designated by the DIS ADPE or front panel.

h. Provide status of link sequence number, port sequence number, lost blocks in the link, lost blocks for each port, link polynomial errors, port polynomial errors, link blocks received, and port blocks received.

C.2.3.1.1 Data Block Synchronization

The input demultiplexer shall search for the 32-bit sync pattern in the link header. A sync pattern error tolerance from zero to 15 bits shall be selectable by the DIS ADPE or the front panel. If the error count is within the selected error tolerance, the pattern detection shall enable processing of the remaining link header.

C.2.3.1.2 Link and Port Sequence Number Accounting

The input demultiplexer shall provide message accounting functions for verification and status reporting of the link and port sequence numbers, accumulated number of blocks received, polynomial errors, and lost block counts by link and by individual port address.

Upon receipt of an input block, the expected port and link sequence numbers shall be compared to the received port and link sequence numbers. In the case of a valid comparison or a single noncompare followed by valid comparisons, normal operation shall continue. In the case of a noncompare of two or more successive sequence numbers, a sequence error indication shall be provided to the DIS ADPE and the front panel. The input demultiplexer shall determine the number of lost blocks (port and/or link), and shall update the appropriate stored counts.

C.2.3.1.3 Port Address Decoding and Correction

The input demultiplexer shall decode and correct up to three bit errors in the port address and CRC fields of the link header. In the event the port address is determined to be uncorrectable, routing of data to the output channel processor shall be inhibited and a port address error indication shall be provided to the DIS ADPE and front panel.

C.2.3.1.4 Polynomial Decoding

The input demultiplexer shall control the data block decoding and setting of the polynomial flag bit. The decoder shall check the polynomial code at the end of the data block and shall set the polynomial flag bit 4778 to a logic "0" if the block is valid or to a logic "1" if the block is invalid. An invalid block shall generate a polynomial error alarm.

C.2.3.1.5 Data Block Routing

The input demultiplexer shall route each 4800-bit data block to the output channel processor allocated to the port address detected in the link header.

C.2.3.2 Output Channel Processor Functional Requirements

The output channel processor shall perform the following functions:

a. Receive 4800-bit data blocks from the input demultiplexer.

b. Provide sufficient storage to allow output data rate buffering.

c. Generate the output data clock.

d. Transmit 4800-bit data blocks or a deblocked bit-contiguous data stream and clock to the output channel.

C.2.3.2.1 Data Buffering

The data buffer shall be capable of operating in the blocked-output mode or in the unblocked-output mode. In the unblocked output mode, the output channel processor shall be capable of operating either in the continuous output mode or in the immediate block transfer mode. The

output channel processor shall contain sufficient storage to provide an uninterrupted output data steam in the continuous output mode.

C.2.3.2.2 Clock Frequency Generation

The output channel processor shall generate the output channel clock from the externally supplied CTFS reference frequency. The output channel clock shall be capable of operating at any selected frequency from 100 Hz to 7 MHz with an accuracy of 1×10^{-9}. The resolution of the frequency selected by the DIS ADPE or the front panel shall be to five decimal digits. For the continuous output mode, the output channel processor shall provide a clock tracking capability. Clock tracking shall prevent the data overflow/underflow condition that occurs due to the inevitable variations between input (source) clock and output (destination) clock frequencies when timing is not transferred from source to destination. The clock tracking capability shall prevent buffer underflow or overflow by having the output clock track the data source clock for variations of ± 0.1 percent from the selected clock rate. For the continuous output mode, data sources at GSFC and JSC will have bit rates accurate to ± 1 part in 10^5.

C.2.3.2.3 Unblocked Bit-Contiguous Data Output

For unblocked bit-contiguous output data, the output channel processor shall be capable of performing the following functions:

a. Reformatting.

b. Output Clock Generation.

c. Clock and Data Clamping.

C.2.3.2.3.1 Reformatting

The output channel shall remove the network header, customer header, time tag, and polynomial, and shall output only the 4624-bit bit-contiguous data field (or portion thereof if the data field is only partially filled) (see Section C.2.2.1.2).

C.2.3.2.3.2 Output Clock Generation

Two modes shall be provided for output clock control: a continuous output mode and an immediate transfer mode. Mode selection shall be controlled from the DIS ADPE or from the front panel. The DIS ADPE shall extract the data rate information of the data sources from schedule orders and shall provide this information to the output channel processor via the DIS service bus.

a. Continuous Output Mode. The output channel processor shall interpret the datagram bit, when set to 0, as a continuous output mode indicator, and shall provide a smooth, continuous data output at a selected data rate up to 7 Mbps for the duration of data

present in the output channel processor. In this mode, the first block of data shall be transmitted from the output channel processor after a delay not to exceed 264 milliseconds from the complete reception of the first block in the output channel processor.

b. Immediate Block Transfer Mode. The output channel processor shall interpret the datagram bit, when set to 1, as a one-block message indicator (see Figure C-5), and shall commence data transmission from the output channel processor immediately upon receipt of the block.

C.2.3.2.3.3 Clock and Data Clamping

Upon selection by the DIS ADPE or front panel controls, clock and data clamping modes shall be available for unblocked data output.

a. Clamped or Unclamped Clock Modes - No data available. The capabilities of either clamping the clock to a logical 1 when no data is available for output or allowing the clock to be available continuously shall be provided.

b. Data Clamping. When no data is available for output, the output data channel shall be clamped to a logical 1.

c. Clamped Clock and Data. During the reconfiguration of an output channel processor, the clock and data lines shall be clamped to a logical 1.

C.2.3.2.4 Blocked Data Output

The output channel processor shall be capable of buffering and transferring 4800-bit blocked data to the output channel. CABs shall not be transferred to the output channel. The capability of selecting the output channel clock rate from the DIS ADPE or from the front panel shall be provided.

C.2.4 Control and Monitoring Functions

Each low-rate data multiplexer/demultiplexer shall be capable of being controlled and monitored from the DIS ADPE via the DIS service bus or from the front panel.

C.2.4.1 Multiplexer Control Functions

For each input channel, a front panel local/remote control selector shall assign control either to front panel controls or to remote control via the DIS ADPE. Controls for the following functions shall be provided:

a. Blocked or unblocked input data.

b. Unmodified or modified network header for blocked data.

c. Input channel processor enable/disable.

d. Timeout mode selection.

e. Port address selection.

f. Data stream ID.

g. Expected input clock rate selection.

h. Format Code.

i. Time tag enable/disable.

C.2.4.2 Multiplexer Status Displays and Alarms

The following multiplexer displays and alarms shall be provided at the TOCC DIS workstation via the DIS ADPE and at front panel indicators:

a. Multiplexer configuration status.

b. Input channel clock presence.

c. Input channel clock out of tolerance indication.

d. Sequence number display. The port and link sequence number shall be displayed on the front panel individually for each input channel. The display shall be capable of displaying up to three decimal digits.

C.2.4.3 Demultiplexer Control Functions

For each output channel, a front panel control selector shall assign control either to front panel controls or to remote control via the DIS ADPE. Controls for the following functions shall be provided:

a. Blocked/unblocked output data.

b. Clock tracking mode selection.

c. Port address.

d. Output channel processor enable/disable.

e. Clamped or unclamped clock mode selection.

f. Output clock rate selection.

C.2.4.4 Demultiplexer Status Displays and Alarms

The following demultiplexer displays and alarms shall be provided at the TOCC DIS workstation via the DIS ADPE and at front panel indicators:

a. Demultiplexer configuration status.

b. Sequence number display. The port and link sequence number shall be displayed on the front panel individually for each output channel. This display shall be capable of displaying up to three decimal digits.

c. Port address uncorrectable.

d. Lost block count.

e. Output channel port sequence numbers missing.

f. Link sequence numbers missing.

g. Output channel processor number of blocks received (up to 999999).

h. Number of blocks with polynomial errors received by output channel processor (up to 9999).

i. Output channel processor not receiving data or circuit assurance blocks.

C.3 High Data Rate Formatting and Multiplexing

This section specifies the functional requirements for the High Data Rate Multiplexer (HDRM).

C.3.1 Multiplexing/Transmitting

The HDRM shall accept serial data at any rate from 125 kbps nominal to 48 Mbps nominal on each of 4 input ports. The HDRM shall format the data, add sync patterns, port addresses, and clock rate information (see Figure C-8), and shall output data at a rate of 50 Mbps to the Communications Switch. Operational scheduling of the data input to each port will prevent exceeding the total data input of 48.024 Mbps.

C.3.1.1 Data and Clock Input

The HDRM shall accept serial data input on four ports at any rate from 124.937 kbps to 48.024 Mbps. The presence of input clock on a port shall enable HDRM acceptance of the input data into that port.

C.3.1.2 Input Port Clock Rate Measurement

The clock rate shall be measured 100 times per second at each input port as follows: The number of clock pulses received during each 10-ms time interval shall be counted. The clock-pulse count shall be formatted into six BCD digits to be utilized in the output data frame and shall be provided to the DIS ADPE and front panel for each port. If a clock dropout has occurred, the last valid clock-pulse count shall continue to be utilized until the clock input signal is recovered.

C.3.1.3 Data Buffering

Sufficient data buffering shall be provided for each port to enable continuous reception of bit-contiguous data and intermittent, priority-based transmission of 8000-bit data frames without buffer overflow.

C.3.1.4 Formatting

The output frame format shall comply with Figure C-8. The output clock shall be derived from a CTFS reference frequency input or an internal oscillator, and shall have a rate of 50 MHz.

An output frame shall consist of 250 32-bit words. Each of the first 248 words shall contain 31 bits of data from a single input port and a distributed sync bit. These 248 words shall be divided into eight groups of 31 words (eight data cycles). The 31-bit distributed sync pattern shall be appended, one bit per word, to each of the words in the first seven data cycles. A frame shall therefore contain seven repetitions of the sync pattern. The end-of-frame pattern shall be appended, one bit per word, to the 31 words in the eighth data cycle. In Figure C-8, S0 through S30 represent the distributed sync sequence. PS0 through PS30 represent the end-of-frame pattern.

The 31-bit distributed sync pattern shall be unique for each of the four ports. The sync and end-of-frame patterns shall be as specified in Table C-5. These patterns are distributed through the frame to guard against large error bursts on the CC communications channel.

Words 249 and 250 shall each contain 24 bits (six BCD digits) that identify the frequency of the incoming clock (see Section C.3.1.2). Word 249 also shall contain six guard bits with 001011 format. Word 250 shall contain the four-bit frame sequence number. The format of the frame sequence number shall be MSB first.

C.3.1.5 HDR Multiplexing

The port containing at least 7688 data bits associated with the highest clock rate shall be selected for transmission. If data input on a port terminates (no clock present) before a frame slot is filled, the accumulated data bits shall be transmitted in a frame, and the remaining data spaces in this last frame shall be filled with all ones to allow an uninterrupted contiguous stream of data at the output port of the receiving station without any lost data bits. When no frames are available to be transmitted, a 2047-bit pseudo-noise fill pattern shall be transmitted. The fill pattern shall be identical to the maximum length PN sequence generated by the feedback shift-register circuit shown in Figure C-9.

C.3.1.6 Communications Switch Interface

The data stream and the 50-MHz clock shall be provided to the Communications Switch.

C.3.2 Monitoring and Test Functions

This section specifies the requirements for test pattern insertion and local loopback testing.

C.3.2.1 Test Pattern Insertion

Each input port of the HDRM shall be capable of being operated in a test mode. Upon command from the DIS ADPE or front panel control, a test pattern and a 12-MHz test mode clock signal shall be continuously applied to the input port. The test pattern shall be selectable from all ones,

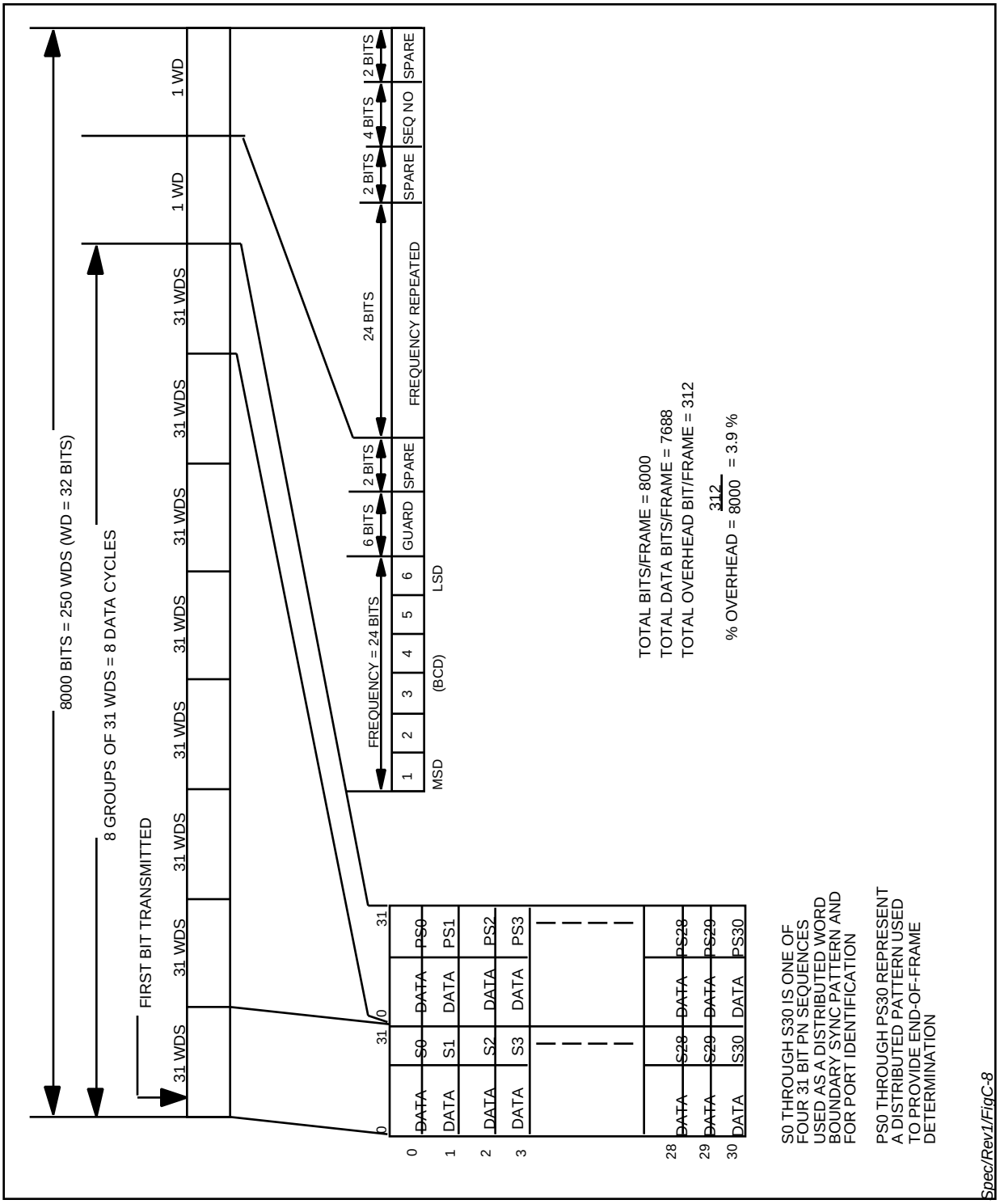

Figure C-8. Frame Format Diagram

Table C-5. Sync and End-Of-Frame Patterns

SYNC PATTERN						END-OF-FRAME
BIT	**PORT 1**	**PORT 2**	**PORT 3**	**PORT 4**	**BIT**	**PATTERN**
SO[1]	0	1	1	0	PSO[1]	1
S1	1	0	0	1	PS1	1
S2	0	0	1	1	PS2	1
S3	1	0	0	1	PS3	1
S4	1	0	0	1	PS4	1
S5	1	1	0	0	PS5	0
S6	0	0	1	1	PS6	1
S7	1	0	0	1	PS7	0
S8	1	1	0	0	PS8	1
S9	0	0	1	1	PS9	1
S10	0	1	1	0	PS10	1
S11	0	1	1	0	PS11	1
S12	1	0	0	1	PS12	0
S13	1	0	0	1	PS13	0
S14	1	1	0	0	PS14	1
S15	1	1	0	0	PS15	1
S16	1	1	0	0	PS16	0
S17	0	1	1	0	PS17	0
S18	0	1	1	0	PS18	1
S19	1	0	0	1	PS19	1
S20	1	0	0	1	PS20	0
S21	0	0	1	1	PS21	1
S22	1	1	0	0	PS22	0
S23	0	1	1	1	PS23	0
S24	0	0	1	1	PS24	0
S25	1	1	0	0	PS25	0

Table C-5. Sync and End-Of-Frame Patterns (Cont'd)

S26	0	1	1	0	PS26	0
S27	0	1	1	0	PS27	0
S28	0	0	1	1	PS28	0
S29	0	1	1	0	PS29	0
S30	1	0	0	1	PS30	0

NOTE

[1]SO - S30 AND PSO - PS30 ARE IDENTIFIED IN FIGURE C-8.

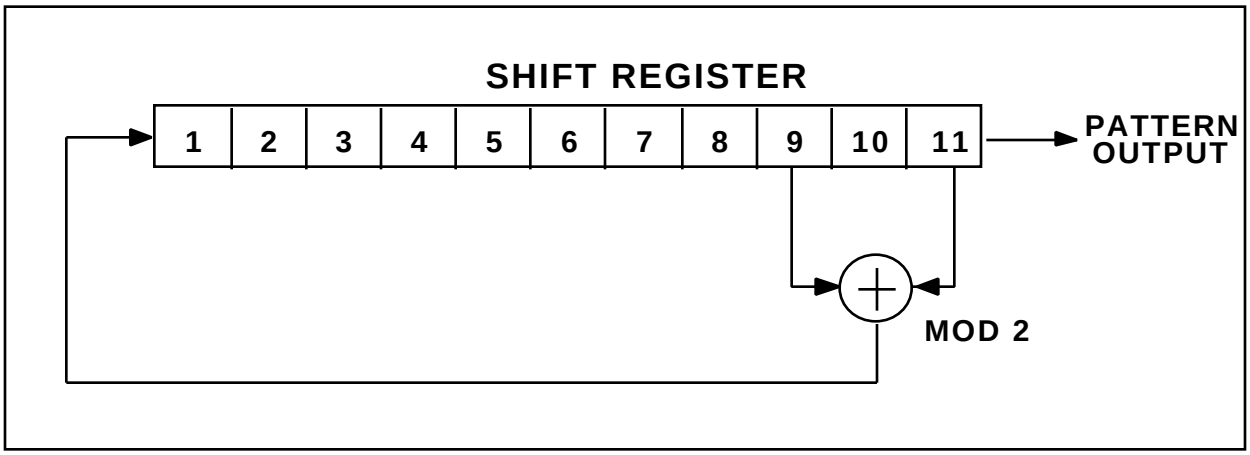

Figure C-9. 2047-Bit PN Fill Pattern Generation

all zeros, alternating ones and zeros, 31-bit PN and 2047-bit PN. The 31-bit PN test pattern is specified in Table C-6, located at the end of this section. The 2047-bit PN pattern shall be identical to the fill pattern specified in Figure C-9. The capability shall be provided to inject from one to eight consecutive errors into the test data stream, to be checked at the receiving end. The 12-MHz test mode clock frequency shall have a tolerance of ± 600 Hz.

C.3.2.2 Local Loopback Testing

The HDRM shall be provided with the capability for local loopback testing for each input port. The bit error probability in the received serial data stream at the local test demultiplexer output shall not exceed 10^{-12} over any 24-hour period for a bit-contiguous input test pattern.

C.3.3 Control and Monitoring Functions

Each HDRM shall be capable of being controlled and monitored by the DIS ADPE via the DIS service bus or from the front panel.

C.3.3.1 Control Functions

For each HDRM, a front panel local/remote control selector shall assign control to either the DIS ADPE or to front panel control. Control for the following functions shall be provided:

a. Input port enable/disable.

b. Test pattern selection.

c. Local loopback test.

C.3.3.2 Status Displays

The following status displays shall be provided at the TOCC DIS workstation via the DIS ADPE and at front panel indicators:

a. Input port clock frequency. The frequency display signals shall permit display of the frequency to the following resolution:

   1. Less than 1 Mbps: 4 significant digits.

   2. From 1 Mbps to less than 10 Mbps: 5 digits.

   3. 10 Mbps and greater: 6 digits.

b. Input clock presence.

c. Input data presence.

d. Port test generator selection.

e. Loopback test configuration.

f. Port enabled/disabled indication.

Table C-6. 31-Bit PN Test Pattern

BIT	LOGIC STATE
1	1
2	1
3	1
4	1
5	1
6	0
7	1
8	0
9	1
10	1
11	1
12	1
13	0
14	0
15	1
16	1
17	0
18	0
19	1
20	1
21	0
22	1
23	0
24	0
25	0
26	0
27	0
28	0
29	0
30	0
31	0

Abbreviations and Acronyms

ACS	Attitude Control System
ACU	Antenna Control Unit
ADP	Automatic Data Processing
ADPE	Automated Data Processing Equipment
AGC	Automatic Gain Control
A_i	Inherent Availability
AM	Amplitude Modulation
A_o	Operational Availability
APL	Average Picture Level
APS	Application Software
AS	Antenna Subsystem
ASCII	American Standard Code for Information Interchange
ATE	Automated Test Equipment
AWGN	Additive White Gaussian Noise
AZ	Azimuth
BB	Baseband
BCD	Binary Coded Decimal
BCE	Before the Common Era
BED	Block Error Detector
BER	Bit Error Rate
BGE	Beacon Generation Equipment
BIT	Built-in-Test
BITE	Built-in-Test Equipment
B_L	Loop Bandwidth
BPS	Bits Per Second
BPSK	Binary Phase Shift Key
BR	Bit Rate

BRTS	Bilateration Ranging Transponder System
BTU	British Thermal Unit
BW	Bandwidth
C	Coherent
CAB	Circuit Assurance Block
CC	Common Carrier
CCI	Common Carrier Interface
CCIR	International Radio Consultative Committee
CDCN	Control and Display Computer Network
CDRL	Contract Data Requirements List
CM	Configuration Management
CMD	Command
C/N_O	Carrier Power to Noise Power Spectral Density Ratio
CPU	Central Processing Unit
CRC	Cyclic Redundancy Check
CRT	Cathode Ray Tube
CSC	Computer Software Component
CSCI	Computer Software Configuration Item
CSESD	Communications Security Equipment Systems Document
CT	Customer Traffic
CTFS	Common Time and Frequency System
dB	Decibel
dBc	Decibels referenced to carrier
dBi	Decibels referenced to an isotropic radiator
dB/K	Decibels per Degrees Kelvin
dBm	Decibels referenced to one milliwatt
dBmi	Decibels referenced to one milliwatt isotropically radiated power
dBW	Decibels referenced to one watt
dBWi	Decibels referenced to one watt isotropically radiated power

DE	Doppler Extraction
DEMUX	Demultiplexer
DG	Data Group
DID	Data Item Description
DIP	Diplexer
DIS	Data Interface System
DLM	Depot Level Maintenance Data Link Monitoring
DoD	Department of Defense
DPM	Data Presence Monitor
DQM	Data Quality Monitor
DRL	Discrepancy Report List
DS	Data Splitter
E_b/N_o	Bit Energy to Noise Power Spectral Density Ratio
EET	End-to-End Test
EIA	Electronics Industry Association
EIRP	Effective Isotropic Radiated Power
EL	Elevation
EMC	Electromagnetic Compatibility
EMI	Electromagnetic Interference
EOT	End of Track
EQPT	Equipment
ESD	Electrostatic Discharge
E_s/N_o	Symbol Energy to Noise Power Spectral Density Ratio
ETO	Emergency Time-Out
FAX	Facsimile
F_d	Doppler Frequency
FDF	Flight Dynamics Facility
FDM	Frequency Division Multiplexed
FM	Frequency Modulation

F_o	Nominal Center Frequency of Customer Spacecraft Receiver
F_R	Carrier Frequency Arriving at Customer Spacecraft
FWD	Forward
G	Antenna Gain
GCR	Geocentric Rotating Coordinate System
GDIS	Guam Data Interface System
GFE	Government-Furnished Equipment
GHz	Gigahertz
GIU	GSTDN Interface Unit
GMT	Greenwich Mean Time
GPS	Global Positioning System
GRGT	Guam Remote Ground Terminal
GSFC	Goddard Space Flight Center
GSTDN	Ground Spaceflight Tracking and Data Network
G/T	Gain to Noise Temperature Ratio
H	Horizontal (Polarization)
HDR	High Data Rate
HDRM	High Data Rate Modulator
HDTV	High Definition Television
HMD	Hardware Maintenance Depot
HOL	High Order Language
HPA	High Power Amplifier
HSM	Hot-Standby Mode
I	In-Phase (Channel)
ICD	Interface Control Document
ICS	Intra/Intersite Communication System
ID	Identification
IEEE	Institute of Electrical and Electronics Engineers
IF	Intermediate Frequency

IFL	Interfacility Link
IIRV	Improved Interrange Vector
ISO	International Standards Organization
JD	Julian Date
JPL	Jet Propulsion Laboratory
JSC	Johnson Space Center
Kb	Kilobits
KB	Keyboard
kbps	Kilobits Per Second
KCHIP	Kilochip
K_F	TDRS-to-Customer Frequency
KG	Key Generator
KGR	Key Generator Receiver
KGT	Key Generator Transmitter
kHz	Kilohertz
km	Kilometer
KSA	K-Band Single Access
KSAF	KSA Forward Service
KSAR	KSA Return Service
KSHF	Ku-Band Shuttle Forward
KSHR	Ku-Band Shuttle Return
ksps	Kilosymbols Per Second
kW	Kilowatt
LAN	Local Area Network
LCP	Left-Hand Circular Polarization
LDR	Low Data Rate
LEO	Low-Earth Orbiting (Satellite)
LI	Local Interface
LNA	Low Noise Amplifier

LOR	Line Outage Recorder
LRD	Low Rate Demodulator
LRU	Line Replaceable Unit
LSB	Least Significant Bit
LSD	Least Significant Digit
LSD	Logistics Support Depot
MA	Multiple Access
MAF	Multiple Access Forward
MAR	Multiple Access Return
Mbps	Megabits Per Second
MCC	Mission Class Code
MCC	Mission Control Center
MCHIPS	Megachips
MDM	Multiplexer-Demultiplexer
MHz	Megahertz
MIL-HDBK	Military Handbook
MIL-STD	Military Standard
MOC	Mission Operations Center
MJD	Modified Julian Date
MMI	Man-Machine Interface
MOD	Geocentric Inertial Mean Equator and Equinox of Data System
MRD	Medium Rate Demodulator
MSB	Most Significant Bit
MSD	Most Significant Digit
mSEC	Millisecond
MSM	Maintenance/Software Delivery Mode
MTBF	Mean Time Between Failures
MTG	Maintenance Test Group
MTTR	Mean Time to Repair

MUX	Multiplexer
N/A	Not Applicable
NASA	National Aeronautics and Space Administration
Nascom	NASA Communications Network
NCC	Network Control Center
NRZ	Non Return-To-Zero
NRZ-L	Non-Return to Zero-Level
NRZ-M	Non-Return to Zero-Mark
NRZ-S	Non-Return to Zero-Space
NSEC	nanoseconds
NTC	National Transmission Committee
NTSC	National Television Systems Committee
O&M	Operations and Maintenance
ODM	Operations Data Message
OM	Operational Messages
OMJ	Orthomode Junction
OPM	Operational Message
OPS	Operations
OS	Operating System
OSI	Open System Interconnections
OSIR	Operational System Interface Requirements
P	Prime
P_{acq}	Probability of Acquisition
PB	Parallel Binary
PDA	Pin Diode Attenuator
PDL	Program Design Language
P_E	Probability of Error
PEP	Tradename For Pep Modular Computer Corp.
PF	Picofarads

PFS	Precision Frequency Source
PIN	Positive-Intrinsic-Negative (Diode)
PM	Phase Modulation
PM	Preventive Maintenance
PMM	Performance Measuring and Monitoring
PMMS	Performance Measuring and Monitoring System
PN	Pseudonoise
POL	Polarization
PPS	Pulse Per Second
PSEC	Picosecond
PSK	Phase Shift Keying
PTE	PMMS Test Equipment
Q	(Quadrature (Channel)
Q/A	Quality Assurance
QDSB	Quadrature Double Sideband
QPSK	Quadrature Phase Shift Keying
R	Redundant or Range
$\dot{R}$	Range Rate (Velocity)
$\ddot{R}$	Acceleration
$\dddot{R}$	Jerk
RAM	Random Access Memory
R_b	Channel Data Rate (bps)
RCP	Right-Hand Circular Polarization
RE	Range Extraction
REV	Revision
RF	Radio Frequency
RFI	Radio Frequency Interface
RGB	Red Green Blue
R/M/A	Reliability/Maintainability/Availability

rms	Root Mean Square
RNG	Range
RPM	Revolutions Per Minute
RTN	Return
RVM	Requirements Verification Matrix
SA	Single Access
SAA	Single Access Antenna
SAF	Single Access Forward
SAR	Single Access Return
S/C	Spacecraft
SCG	Security Classification Guide
SEAS	Systems Engineering and Support
SGL	Space-to-Ground Link
SGLT	Space-to-Ground Link Terminal
SHO	Scheduling Order Data Message
SIC	Satellite Identification Code
SIM	Simulation and Test CSCI
SLR	Service Level Status Report
SMTF	Software Maintenance and Training Facility
SN	Space Network
SNR	Signal to Noise Ratio
SQPN	Staggered Quadriphase Pseudorandom Noise
SQPSK	Staggered Quadrature Phase Shift Keying
SRDP	Shuttle Return Data Processor
SSA	S-Band Single Access
SSAF	SSA Forward Service
SSAR	SSA Return Service
SSB	Single Sideband
SSHF	S-Band Shuttle Forward

SSHR	S-Band Shuttle Return
SSO	Space Shuttle Orbiter
STDN	Spaceflight Tracking and Data Network
STGE	S-Band TT&C Ground Equipment
STGT	Second TDRSS Ground Terminal (a.k.a. Danzante Ground Terminal)
STR	Software Task Requirement
STS	Space Transportation System
STTCS	S-Band TT&C System
SUE	Shuttle Unique Equipment
SUPIDEN	Support Identifier
T&C	Telemetry and Command
TAS	TT&C ADPE Subsystem
TBC	TDM Block Concentrator
TD	Tracking Data
TDM	Tracking Data Message
TDF	Tracking Data Formatter
TDR	Tracking and Data Relay
TDRS	Tracking and Data Relay Satellite
TDRSS	Tracking and Data Relay Satellite System
TLM	Telemetry
TN	TDRSS Network
TOCC	TDRSS Operations Control Center
TOD	Time of Day
TOY	Time of Year
TSG	Timing Signal Generation
TT	Time Transfer
TT&C	Tracking, Telemetry and Command
TTCS	Tracking, Telemetry and Command Subsystem
TTM	Time Transfer Message

TV	Television
TWT	Traveling Wave Tube
TWTA	Traveling Wave Tube Amplifier
UAS	USS ADPE Subsystem
USAF	United States Air Force
USNO	United States Naval Observatory
USS	Customer Services Subsystem
UTC	Universal Time Coordinated
V	Vertical (Polarization)
VDU	Video Display Unit
VIC	Vehicle Identification Code
VIDD	Vertical Interval Data Detector
VIRS	Vertical Interval Reference Signals
VITS	Vertical Interval Test Signal
Vrms	Root Mean Square Voltage
VSWR	Voltage Standing Wave Ratio
WS	Workstation
WSC	White Sands Complex
WSTF	White Sands Test Facility
XLATOR	Translator